S. W. TALIAFERRO.

MOLD FOR MAKING DENTAL CROWN DIES.

APPLICATION FILED OCT. 26, 1916.

1,224,687. Patented May 1, 1917.

Fig. 1.

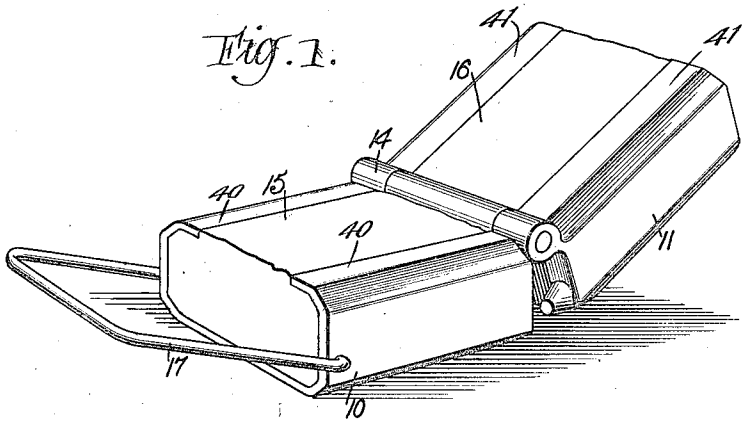

Fig. 2.

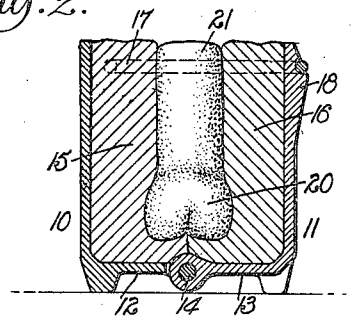

Fig. 3.

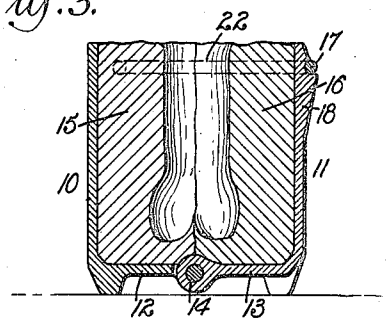

Fig. 4.

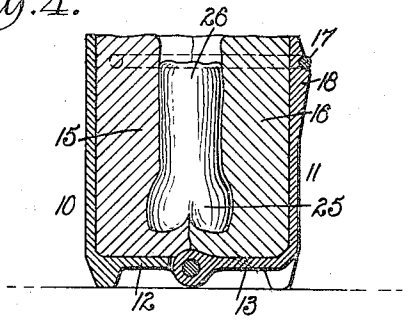

Fig. 5.

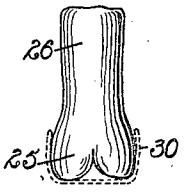

WITNESSES

Frederick Diehl.

Geo. G. Foster, Jr.

INVENTOR

Samuel W. Taliaferro

BY Munn & Co.

ATTORNEYS

UNITED STATES PATENT OFFICE.

SAMUEL WALKER TALIAFERRO, OF NEW YORK, N. Y.

MOLD FOR MAKING DENTAL-CROWN DIES.

1,224,687. Specification of Letters Patent. Patented May 1, 1917.

Application filed October 26, 1916. Serial No. 127,784.

To all whom it may concern:

Be it known that I, SAMUEL W. TALIAFERRO, a citizen of the United States, and a resident of the city of New York, borough of the Bronx, in the county of Bronx and State of New York, have invented new and useful Improvements in Molds for Making Dental-Crown Dies, of which the following is a full, clear, and exact description.

The invention relates to dentistry and its object is to provide certain new and useful improvements in mold for the making of dental crown dies whereby the dentist is enabled to quickly and accurately shape the crown to fit the patient's tooth to be crowned.

In order to produce the desired result use is made of a mold made in two hollow flask parts, closed at the bottom and open at their opposite faces and at the top, a pivotal connection connecting the flask parts with each other at their closed bottoms to allow of swinging the flask parts into closed or open position, and plastic material filling the said flask parts and capable of withstanding a high heat to permit of first making an impression of a plaster cast in the said plastic material and to subsequently allow the casting of a die in the impression formed by the plaster cast in the plastic material.

A practical embodiment of the invention is represented in the accompanying drawings forming a part of this specification, in which similar characters of reference indicate corresponding parts in all the views.

Figure 1 is a perspective view of the two-part mold in open position;

Fig. 2 is a sectional side elevation of the same with the plaster cast in position in the closed mold;

Fig. 3 is a like view of the mold after the plaster cast is removed and showing the impression in the plastic material;

Fig. 4 is a similar view of the mold with the molten metal therein to form a die; and

Fig. 5 is a side elevation of the finished die with the crown blank shown in dotted lines in position on the die to be fashioned to the shape thereof.

The mold used for carrying the above-mentioned method into effect consists of two hollow or box-like flask parts 10 and 11 having closed bottoms 12 and 13 but being open at their opposite faces and at the top. The flask parts 10 and 11 are filled with plastic materials 15 and 16 such as moldine and the like, capable of withstanding a high heat but being sufficiently plastic to permit of making impressions therein, as hereinafter more fully explained. The flask parts 10 and 11 are connected with each other at the adjacent edges of their closed bottoms 12 and 13 by a transverse pivot 14 to permit of swinging the flask parts 10 and 11 toward each other into a closed position or from each other into an open position. The opposite faces of the flask parts 10 and 11 are provided with flanges 40 and 41 extending inwardly from the front and rear of the flask parts 10 and 11, and the said flanges 40 and 41 fit one onto the other when the flask parts are in closed position. The flanges 40 and 41 hold the plastic materials 15 and 16 against outward movement at the joint of the flask parts 10 and 11 when the latter are moved into a closed position and the opposite faces of the plastic materials 15 and 16 are flush with the faces of the flanges 40 and 41 to provide a close joint on closing of the flask parts 10 and 11. The flask part 10 is provided with a bail 17 adapted to be swung over and to engage a keeper 18 formed on the other flask part 11 to hold the flask parts 10 and 11 locked in closed position, as plainly indicated in Figs. 2, 3 and 4.

In making the crown for a tooth, the dentist first produces in the usual manner a plaster cast 20 of the patient's tooth to be crowned, and this plaster cast 20 is provided with a shank 21, as plainly shown in Fig. 2. The plaster cast 20 with a piece of the shank 21 is embedded half way in one of the plastic materials 15 or 16 at the open side of the flask and then the flask parts are closed so that the other half of the plaster cast 20 and its shank 21 is embedded in the other plastic material. Thus the plaster cast 20 and its shank 21 produce an impression 22 in the plastic materials 15 and 16 and which impression conforms to the exact configuration of the plaster cast 20 and its shank 21. The flask parts 10 and 11 are next opened and the plaster cast 20 with its shank is then removed, after which the flask parts are again closed and locked in closed position to permit of pouring the molten metal into the impression 22 thus forming a die 25 having a shank 26, as plainly shown in Figs. 4 and 5. After the molten metal has hardened and cooled the mold is opened and the die 25 with its shank 26 is removed from the mold.

It will be noticed that the die 25 is an exact reproduction of the tooth to be crowned, and the dentist now places a cup-shaped crown blank 30 over the die 25 and then hammers this blank into the different cavities of the die with a view to fashion the crown to the configuration of the die 25 and consequently that of the tooth. The crown thus produced after being removed from the die 25 is slipped over the patient's tooth and accurately fits the same.

From the foregoing it will be seen that by the arrangement described a dentist can quickly and accurately produce a crown for covering a tooth.

It will also be noticed that the mold shown and described can be used over and over again for making dies on which the crown blanks are formed to the shape of the patient's tooth.

Having thus described my invention, I claim as new and desire to secure by Letters Patent:—

1 A mold comprising two hollow flask parts closed at the bottom and open at their opposite faces and entirely open at the top, a pivotal transverse connection connecting the flask parts with each other at their closed bottoms, and a plastic material filling the said flask parts and capable of withstanding a high heat to permit of first making an impression of a plaster cast in the said plastic material and subsequently allow casting of a die in the impression formed by the plaster cast in the plastic material.

2. A mold, comprising two hollow flask parts closed at the bottom and partly open at their opposite faces and entirely open at the top, a transverse pivotal connection connecting the flask parts with each other at their closed bottoms, a plastic material filling the said flask parts and capable of withstanding a high heat to permit of first making an impression of a plaster cast in the said plastic material and subsequently allow casting of a die in the impression formed by the plaster cast in the plastic material, and means for holding the said flask parts locked in closed position.

3. A mold, comprising two hollow flask parts closed at the bottom and open at the top, the opposite faces of the flask parts having inwardly extending flanges at the front and rear, the inner edges of the flanges on each flask part being spaced apart to provide an opening between them, the flanges of the flask parts engaging each other when the flask parts are closed, a transverse pivot connecting the flask parts with each other at their closed bottoms, and a plastic material filling the said flask parts flush with the outer faces of the said flanges, the plastic material being capable of withstanding a high heat to permit of first making an impression of a plaster cast in the said plastic material and subsequently allowing casting of a die in the impression formed by the plaster cast on the plastic material.

SAMUEL WALKER TALIAFERRO.