US 20060122911A1

(19) United States

(12) Patent Application Publication (10) Pub. No.: US 2006/0122911 A1

Kindo et al. (43) Pub. Date: Jun. 8, 2006

(54) E-COMMERCE SYSTEM AND METHOD

(75) Inventors: **Toshiki Kindo**, Yokohama-shi (JP); **Hideyuki Yoshida**, Sagamihara-shi (JP); **Takehiko Shida**, Yokohama-shi (JP); **Hiroshi Takase**, Matsudo-shi (JP)

Correspondence Address:
GREENBLUM & BERNSTEIN, P.L.C.
1950 ROLAND CLARKE PLACE
RESTON, VA 20191 (US)

(73) Assignee: **MATSUSHITA ELECTRIC INDUSTRIAL CO., LTD.**, Osaka (JP)

(21) Appl. No.: **11/339,730**

(22) Filed: **Jan. 26, 2006**

Related U.S. Application Data

(62) Division of application No. 09/985,736, filed on Nov. 6, 2001, now Pat. No. 7,024,380.

(30) **Foreign Application Priority Data**

Nov. 8, 2000 (JP) JP2000-340741

Publication Classification

(51) **Int. Cl.**
G06Q 30/00 (2006.01)

(52) **U.S. Cl.** **705/26**

(57) **ABSTRACT**

In an e-commerce system which rearranges merchandise information pieces distributed to a consumer to match preferences of the consumer based on a personal profile with which various keywords contained in the merchandise information pieces and evaluation values corresponding to the keywords are registered where the evaluation values are learned in advance based on preferences of the consumer, while withdrawing a charge of merchandise from an account designated by the consumer to pay to the seller when receiving an order from the rearranged merchandise information pieces, an order for merchandise from the merchandise information pieces distributed to one consumer is placed using the personal profile of another consumer.

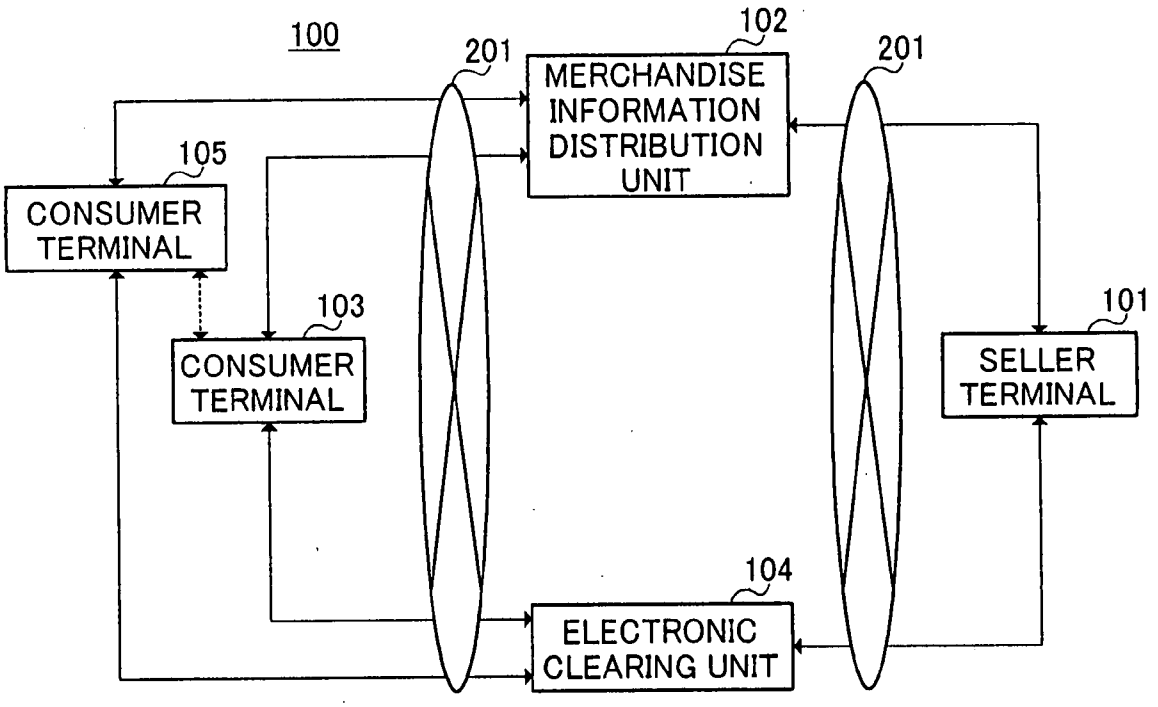

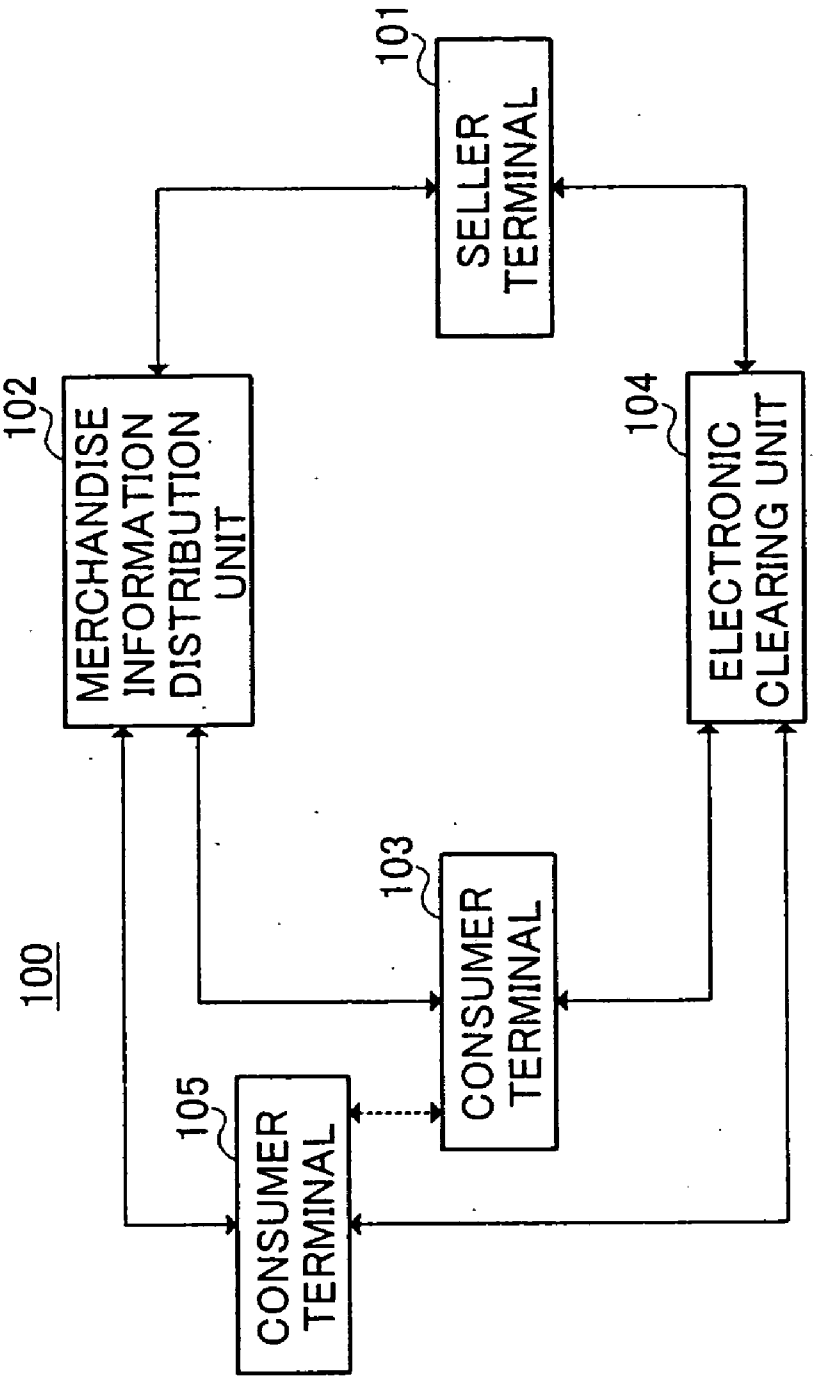
100
101
SELLER TERMINAL
102
MERCHANDISE INFORMATION DISTRIBUTION UNIT
103
CONSUMER TERMINAL
104
ELECTRONIC CLEARING UNIT
105
CONSUMER TERMINAL

FIG.1

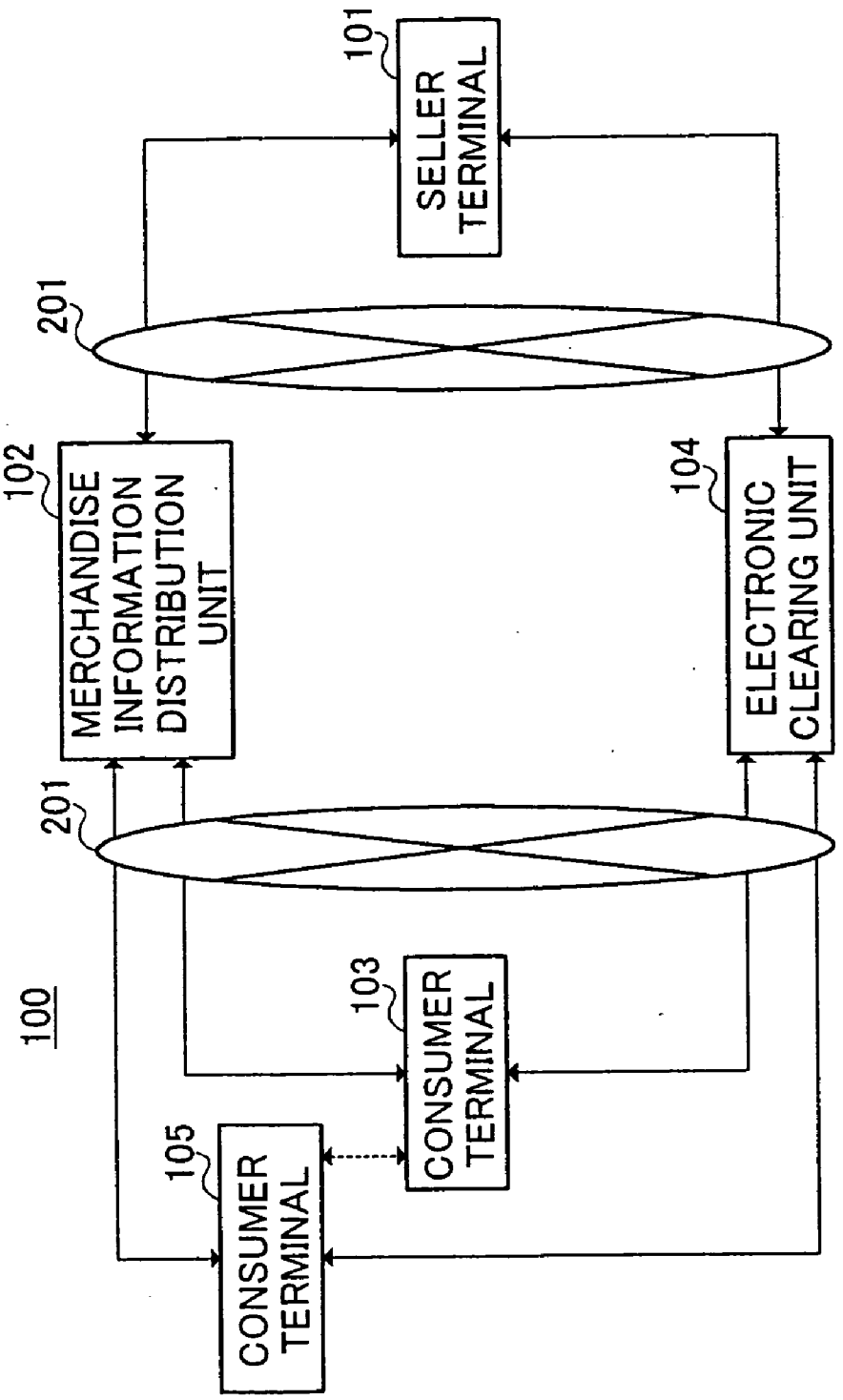
100
101
SELLER TERMINAL
201
102
MERCHANDISE INFORMATION DISTRIBUTION UNIT
104
ELECTRONIC CLEARING UNIT
201
103
CONSUMER TERMINAL
105
CONSUMER TERMINAL

FIG.2

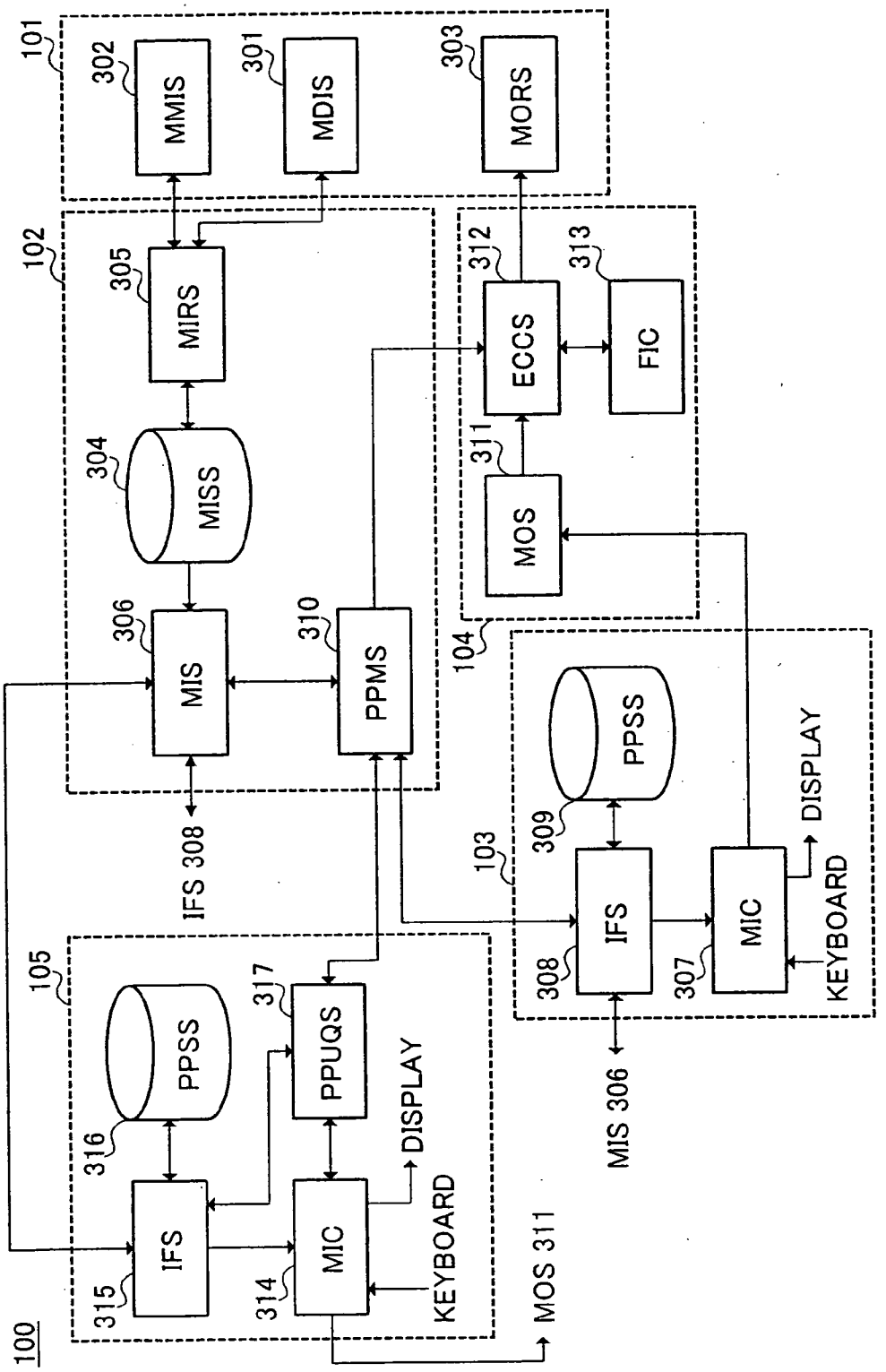
100
101
102
103
104
105
MMIS
MDIS
MORS
MIRS
MISS
MIS
PPMS
ECCS
FIC
MOS
PPSS
IFS
MIC
PPUQS
IFS 308
MIS 306
MOS 311
DISPLAY
KEYBOARD
302
301
303
305
304
306
310
312
313
311
309
308
307
316
317
315
314

FIG.3

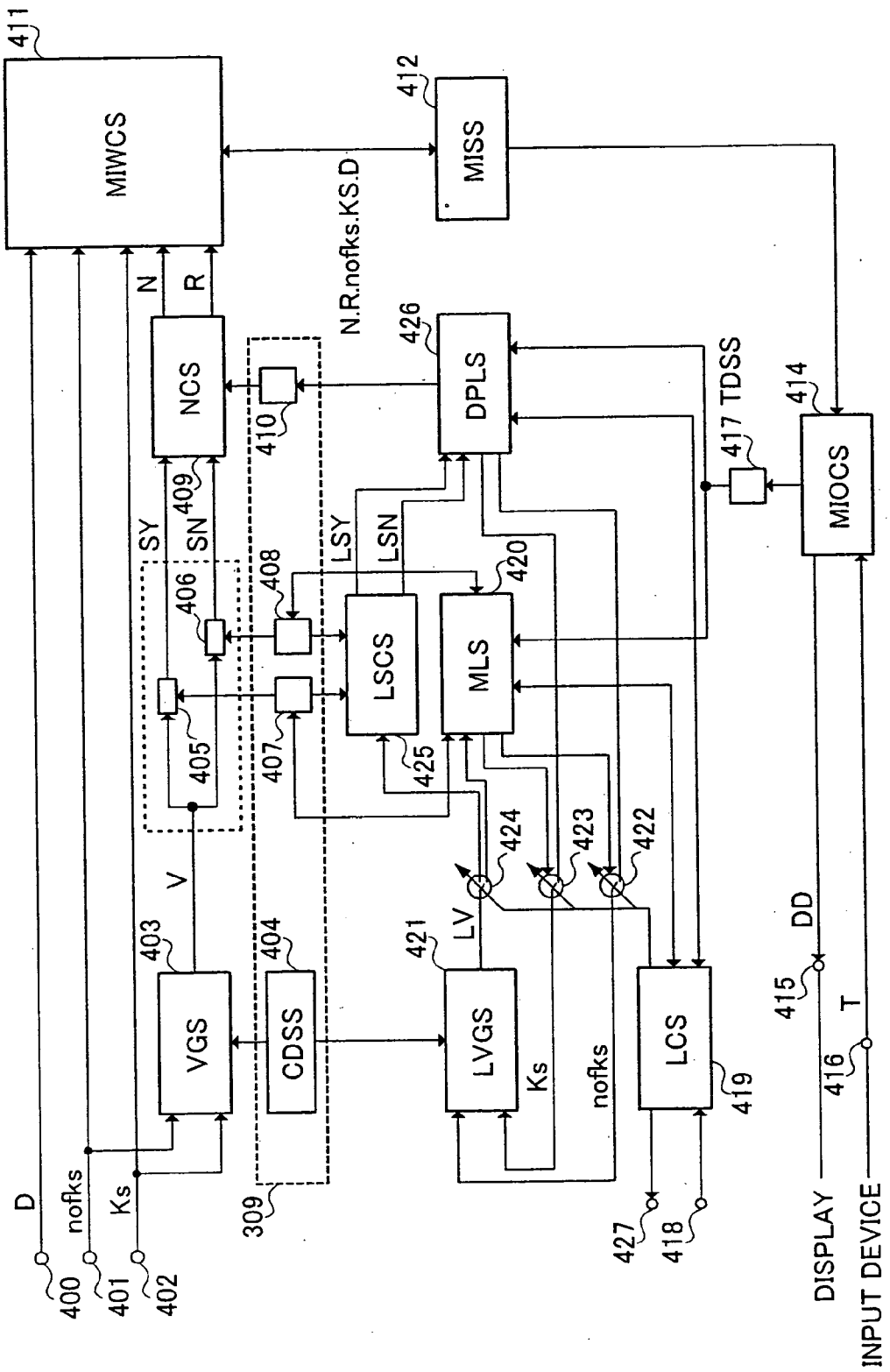
MIWCS
411
MISS
412
N.R.nofks.KS.D
NCS
N
R
DPLS
426
410
409
SY
SN
LSY
LSN
406
408
LSCS
MLS
420
405
407
425
417 TDSS
MIOCS
414
V
403
VGS
404
CDSS
421
LV
424
423
422
LVGS
Ks
nofks
LCS
419
DD
415
T
416
D
nofks
Ks
400
401
402
309
427
418
DISPLAY
INPUT DEVICE

FIG.4

NUMBER	KEYWORD	CODE DICTIONARY SIGN
1	AAA(SELLER ID)	00000
2	BBB(SELLER ID)	00001
3	A00(MERCHANDISE ID)	00010
4	B00(MERCHANDISE ID)	00011
5	SHIRT	00100
6	LONG SLEEVES	00101
7	SHORT SLEEVES	00110
8	PANTS	00111
9	JEANS	01000
10	CHINO PANTS	01001
11	SKIRT	01010
12	LONG	01011
13	SHORT	01100
14	¥5,000～¥10,000	01101
15	¥10,000～¥15,000	01110

FIG.5

NUMBER	KEYWORD	SCORE (POSITIVE)	SCORE (NEGATIVE)
1	AAA(SELLER ID)	8	1
2	BBB(SELLER ID)	1	5
3	A00(MERCHANDISE ID)	5	3
4	B00(MERCHANDISE ID)	0	3
5	SHIRT	4	1
6	LONG SLEEVES	0	0
7	SHORT SLEEVES	4	0
8	PANTS	1	3
9	JEANS	0	0
10	CHINO PANTS	0	2
11	SKIRT	3	0
12	LONG	0	0
13	SHORT	0	0
14	¥5,000～¥10,000	1	0
15	¥10,000～¥15,000	0	0

FIG.6

RANK	MERCHANDISE INFORMATION	NECESSITY SIGNAL N
1	④	16
2	①	12
3	②	11
4	③	0
5	⑤	−1

FIG.7

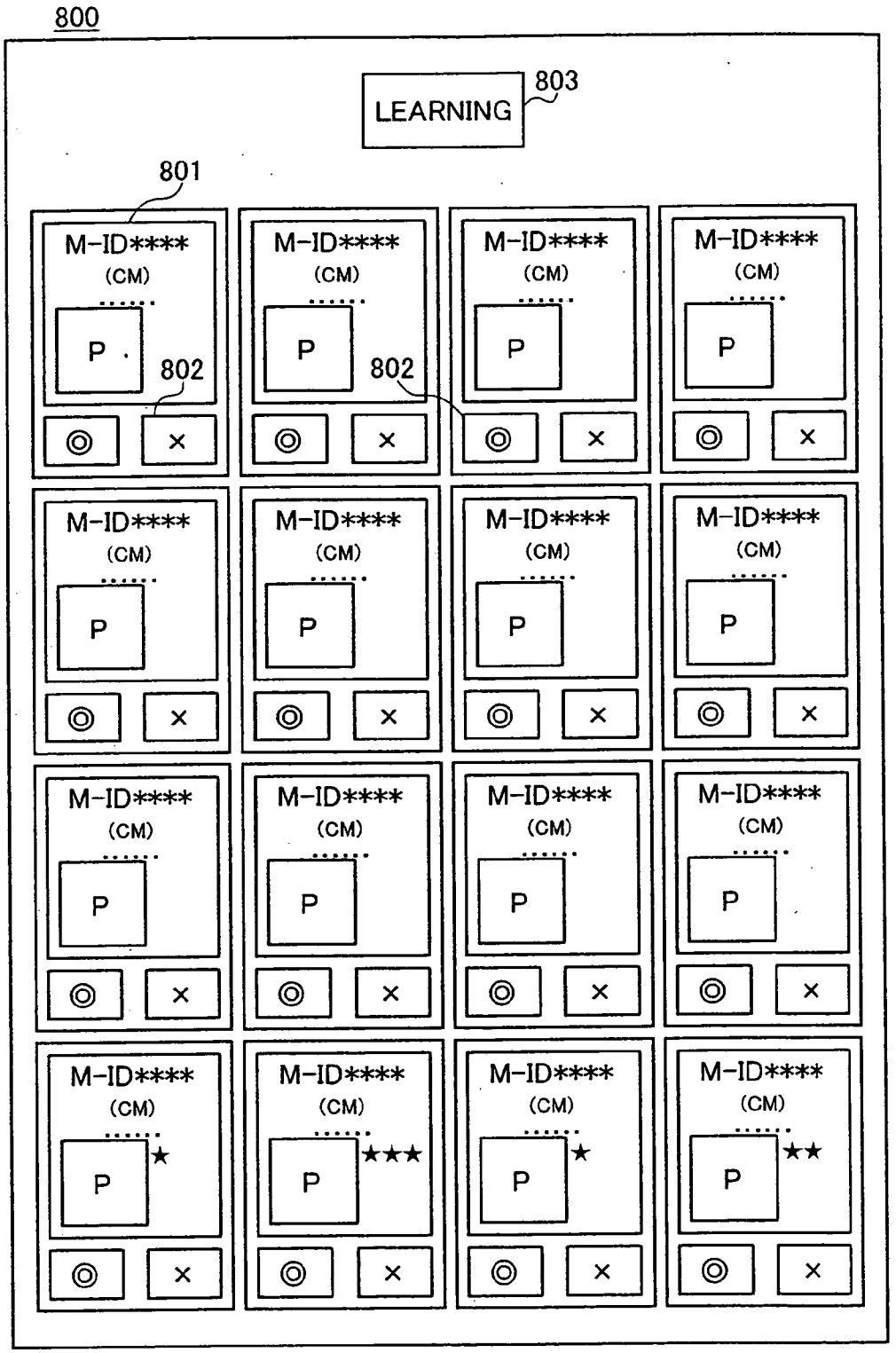

M-ID : MERCHANDISE ID
CM : CHARACTERISTICS OF MERCHANDISE
P : PHOTOGRAPH

FIG.8

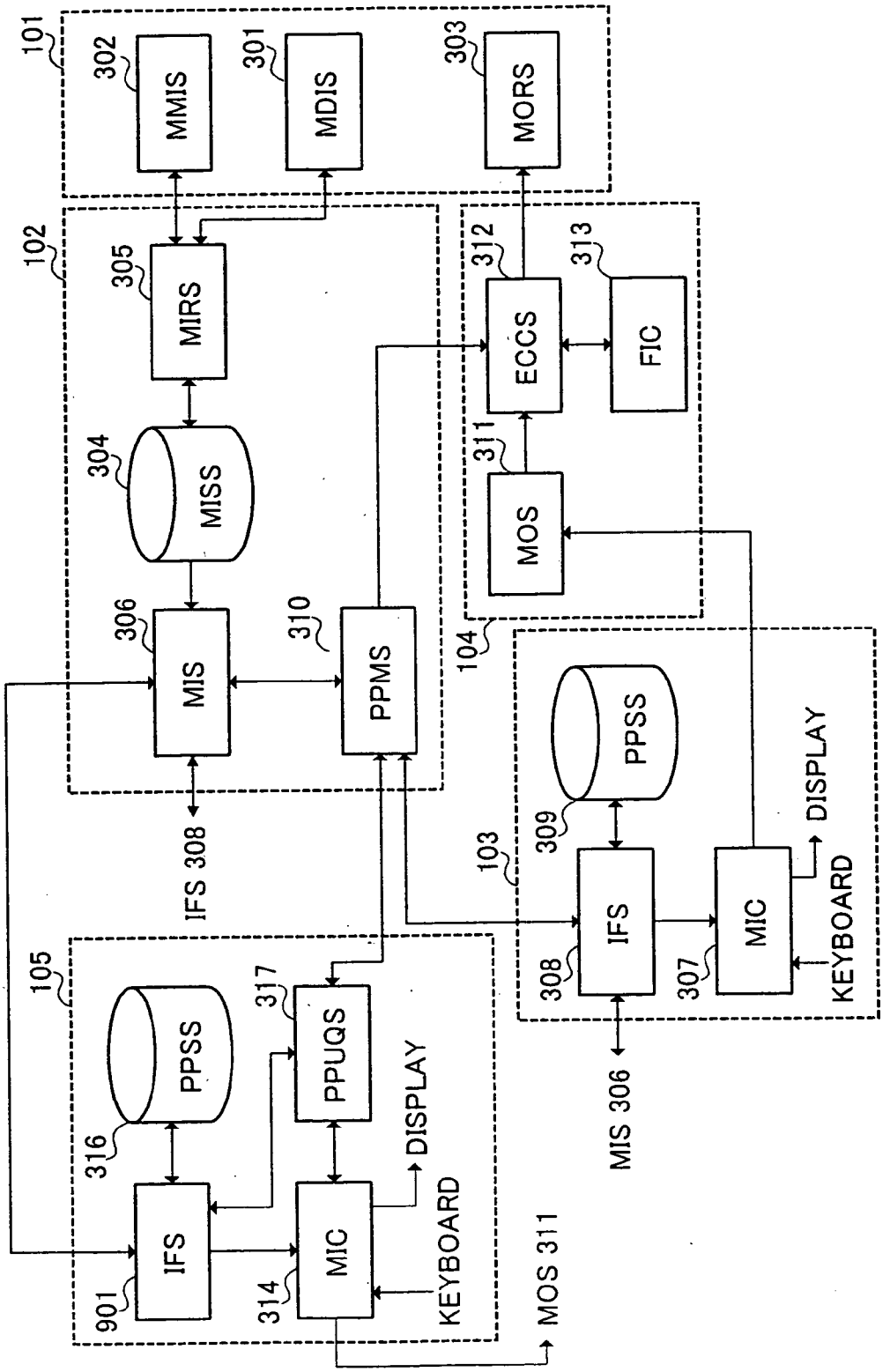
101
302
MMIS
301
MDIS
303
MORS
102
305
MIRS
304
MISS
306
MIS
310
PPMS
IFS 308
312
ECCS
313
FIC
311
MOS
104
PPSS
309
103
IFS
308
MIC
307
DISPLAY
KEYBOARD
MIS 306
105
PPSS
316
317
PPUQS
DISPLAY
KEYBOARD
901
IFS
314
MIC
MOS 311

FIG.9

RANK	MERCHANDISE INFORMATION	NECESSITY SIGNAL Na	NECESSITY SIGNAL Nb	TOTAL (Na+Nb)
1	①	12	20	32
2	④	16	14	30
3	③	0	13	13
4	②	11	0	11
5	⑤	-1	-1	-2

FIG.10

RANK	MERCHANDISE INFORMATION	NECESSITY SIGNAL Na	NECESSITY SIGNAL Nb	INDICA-TION
1	④	16	14	○ ○
2	①	12	20	○○ ○○
3	②	11	0	
4	③	0	13	○ ○
5	⑤	-1	-1	•

FIG.11

E-COMMERCE SYSTEM AND METHOD

[0001] This is a divisional application of U.S. application Ser. No. 09/985,736, filed Nov. 6, 2001, the contents of which are expressly incorporated by reference herein it's entirety.

BACKGROUND OF THE INVENTION

[0002] 1. Field of the Invention

[0003] The present invention relates to an e-commerce system utilizing information communication networks using electronic, radio and/or optical system as media, and more particularly to an e-commerce system and method enabling ordinary people to purchase merchandise corresponding to celebrity preferences.

[0004] 2. Description of the Related Art

[0005] Conventionally, on the market exist the needs that a consumer desires to purchase merchandise corresponding to preference of a person who interests the consumer. An example of the needs is a case of considering to wear the same merchandise that a celebrity wears to imitate the celebrity. In order to cope with such needs, magazines or the like run feature articles for introducing shops where merchandise that a celebrity wears can be purchased. Further, with the progress of infrastructures on information technology and information networks such as the internet, similar feature articles are run in e-commerce using the information networks.

[0006] However, in the case of introducing merchandise that celebrities wear in such a method, there arises a situation where the celebrity privacy is not protected. That is, when a shop is introduced where merchandise that a celebrity wears can be purchased, a situation may occur where the so-called fans of the celebrity rush to the shop, and the celebrity privacy is not protected. Therefore, a case is expected that merchandise that a celebrity recommends is different from the merchandise that the celebrity actually wears. Accordingly, there arises a problem that the methods are not capable of coping with the above-mentioned consumer needs.

[0007] Further, in the methods as described above it is expected that merchandise corresponding to temporary celebrity preference at the time the magazine or the like issued be introduced. Accordingly, when the celebrity preference has changed with the passage of time, a case is expected that merchandise recommended by a celebrity in the magazine is different from merchandise that the celebrity currently wears. Also in such a case the problem arises that the methods are not capable of coping with the consumer needs.

SUMMARY OF THE INVENTION

[0008] It is an object of the present invention to provide an e-commerce system and method enabling consumers to purchase merchandise corresponding to a current preference of a celebrity while protecting the privacy of the celebrity.

[0009] Namely, in an e-commerce system which rearranges merchandise information pieces distributed corresponding to search criteria of the consumer to match with preferences of the consumer based on a personal profile with which various keywords contained in the merchandise information pieces and evaluation values corresponding to the keywords are registered where the evaluation values are learned in advance based on preferences of the consumer, while withdrawing a charge of merchandise from an account designated by the consumer to pay to a seller when receiving an order for the merchandise from the rearranged merchandise information pieces, an order for merchandise from the merchandise information pieces distributed to one consumer (for example, an ordinary person) is placed using the personal profile of another consumer (for example, a celebrity).

[0010] Further, the e-commerce system rates the merchandise information pieces distributed to the consumer based on the personal profile to rearrange the merchandise information pieces to match the preference of the consumer.

[0011] Furthermore, the e-commerce system ranks the merchandise information pieces according to the rate assigned to each of the merchandise information pieces.

[0012] According to the foregoing, by using the personal profile of the different consumer, merchandise information pieces distributed to one consumer can be reflective of preferences of the different consumer. One consumer is thereby capable of purchasing merchandise corresponding to preferences of the different consumer by placing an order for the merchandise based on the merchandise information pieces thus reflective of preferences of the different consumer.

BRIEF DESCRIPTION OF THE DRAWINGS

[0013] **FIG. 1** is a block diagram illustrating a configuration of an e-commerce system according to a first embodiment of the present invention;

[0014] **FIG. 2** is a block diagram illustrating the e-commerce system connected through networks according to the first embodiment;

[0015] **FIG. 3** is a block diagram illustrating a specific configuration of the e-commerce system according to the first embodiment;

[0016] **FIG. 4** is a block diagram illustrating a specific configuration to indicate the relationship between an information filtering section and a PPF storage section in a consumer terminal in the e-commerce system according to the first embodiment;

[0017] **FIG. 5** is a table showing an example of data in a code dictionary storage section in the information filtering section in the e-commerce system according to the first embodiment;

[0018] **FIG. 6** is a table showing examples of scores assigned to the example illustrated in **FIG. 5**;

[0019] **FIG. 7** is a table showing an example of merchandise information ranked in the merchandise information storage section in the information filtering section in the e-commerce system according to the first embodiment;

[0020] **FIG. 8** is a diagram illustrating an example of a learning and ordering screen generated by a merchandise information output control section in the information filtering section in the e-commerce system according to the first embodiment;

[0021] **FIG. 9** is a block diagram illustrating a specific configuration of an e-commerce system according to a second embodiment of the present invention;

[0022] **FIG. 10** is a table showing an example of merchandise information ranked in the merchandise information storage section in the information filtering section in the e-commerce system according to the second embodiment; and

[0023] **FIG. 11** is another table showing an example of the merchandise information ranked in the merchandise information storage section in the information filtering section in the e-commerce system according to the second embodiment.

DETAILED DESCRIPTION OF THE PREFERRED EMBODIMENTS

[0024] Embodiments applying an e-commerce system of the present invention will be described below with reference to accompanying drawings.

First Embodiment

[0025] **FIG. 1** is a block diagram illustrating a configuration of e-commerce system (hereinafter referred to as "EC system") **100** according to the first embodiment of the present invention.

[0026] As illustrated in **FIG. 1**, EC system **100** is comprised of seller terminal **101** for use in registering merchandise information, merchandise information distribution unit **102** that distributes the merchandise information, consumer terminals **103** and **105** for use in watching the merchandise information and placing an order for the merchandise, and electronic clearing unit **104** that clears the transaction on the merchandise.

[0027] In EC system **100** it is assumed that a consumer that uses consumer terminal **103** is a specific person (hereinafter referred to as "celebrity"), such as a personality and an opinion leader of a field, who has effects on other people, and that a consumer that uses consumer terminal **105** is one of ordinary people (hereinafter referred to as "ordinary person") who desires to purchase merchandise corresponding to preferences of the celebrity who uses consumer terminal **103**. Consumer terminals **103** and **105** are provided with different elements corresponding to differences between the consumers assumed to use the terminals. In other words, consumer terminal **105** is provided with an element for inquiring about celebrity preferences.

[0028] In addition, EC system **100** is actually constructed, as illustrated in **FIG. 2**, while seller terminal **101** and consumer terminals **103** and **105** are connected with merchandise information distribution unit **102** and electronic clearing unit **104** provided in, for example, a distributor over networks **201** such as the internet. It may also be possible that the distributor is provided with only merchandise information distribution unit **102**, and that electronic clearing unit **104** is committed to an external financial institute or the like.

[0029] A specific configuration of EC system **100** will be described with reference to **FIG. 3**. **FIG. 3** is a block diagram illustrating the specific configuration of EC system **100** according to this embodiment.

[0030] In EC system **100** illustrated in **FIG. 3**, seller terminal **101** is provided with merchandise data input section (MDIS) **301** that inputs merchandise data to merchandise information distribution unit **102**, merchandise metadata input section (MMIS) **302** that inputs merchandise metadata to merchandise information distribution unit **102**, and merchandise order receiving section (MORS) **303** that receives an order receiving signal including the consumer ID of an orderer and merchandise ID contained in the merchandise information from electronic clearing unit **104**.

[0031] Merchandise information distribution unit **102** is provided with merchandise information storage section (MISS) **304** that stores the merchandise data and merchandise metadata (hereinafter referred to as "merchandise information") input from seller terminal **101**, merchandise information registration section (MIRS) **305** that registers the merchandise information with merchandise information storage section **304**, merchandise information server (MIS) **306** that distributes the desired merchandise information to consumer terminal **103** in response to an access from consumer terminal **103**, and personal profile managing section (hereinafter referred to as "PPF managing section") (PPMS) **310** described below.

[0032] PPF managing section **310** judges whether or not to permit the utilization of a personal profile (hereinafter referred to as "PPF") reflective of preferences of a celebrity on which a request is transmitted from consumer terminal **105** that an ordinary person uses. In addition, PPF will be described specifically later. PPF managing section **310** has the utilization criteria for using PPF of the celebrity which are in advance registered with the section **310**, and by examining the utilization criteria, judges whether or not to permit the utilization of PPF. When permitting the utilization of PPF, the section **310** provides the merchandise information transmitted from consumer terminal **105** to information filtering section (IFS) **308**. Meanwhile, when not permitting the utilization of PPF, the section **310** returns a signal indicative of not permitting to consumer terminal **105**.

[0033] Consumer terminal **103** may be achieved by a general personal computer (hereinafter referred to as "PC") which is provided with a calculation processing means such as CPU and a storage means such as RAM and ROM, and which is connected to an input means such as a keyboard and a display means such as a display.

[0034] Consumer terminal **103** is provided with merchandise information client (MIC) **307** that receives search criteria of merchandise information to merchandise information server **306** from a user through the input means, while displaying the merchandise information distributed from merchandise information **306**. Further, when receiving an order for merchandise from the input means, merchandise information client **307** transmits a merchandise ordering signal to electronic ordering unit **104**. Consumer terminal **103** is further provided with information filtering section **308** and personal profile storage section (hereinafter referred to as "PPF storage section") (PPSS) **309** described below.

[0035] Information filtering section **308** generates PPF reflective of consumer preferences using the merchandise information distributed from merchandise information server **306** and inputs of the consumer. This PPF generated in information filtering section **308** is stored in PPF storage section **309**. The functions of merchandise information

client **307**, information filtering section **308**, and PPF storage section **309** may be achieved by CPU executing a program stored in ROM of consumer terminal **103**. At this time, RAM may be used as an operation area when necessary.

[**0036**] With reference to **FIG. 4**, the relationship between information filtering section **308** and PPF storage section **309** will be described. **FIG. 4** is a block diagram illustrating a specific configuration with respect to the relationship between information filtering section **308** and PPF storage section **309**.

[**0037**] Information filtering section **308** is associated with PPF storage section **309** in two kinds of processing, i.e., filtering processing on the merchandise information and learning processing on the merchandise information. The filtering processing is such processing that rearranges pieces of the merchandise information distributed from merchandise information server **306** according to PPF reflective of consumer (celebrity) preference. Concretely, The filtering processing is such processing that rearranges pieces of the merchandise information distributed from merchandise information server **306** by rating pieces of the merchandise information based on the PPF. It is preferable that rearrangement of pieces of the merchandise information are ranked according to the rate assigned to each of the merchandise information pieces. Specially, in this embodiment is described the case where pieces of the merchandise information distributed from merchandise information server **306** is ranked based on the PPF. The learning processing is such processing that learns PPF for use in performing the filtering processing. In addition, the learning processing is further performed, for example, in placing an order on the merchandise information.

[**0038**] The filtering processing on the merchandise information in information filtering section **308** will be described first.

[**0039**] When a consumer accesses to merchandise information server **306** to search the merchandise information and receives the merchandise information distributed from merchandise information server **306**, as illustrated in **FIG. 4**, input to information data input terminal **400** is the merchandise information comprised of the merchandise data and merchandise metadata to be evaluated, input to number-of-keyword signal input terminal **401** is a number-of-keyword signal nofks indicative of the number of keywords contained in the merchandise information, and input to keyword signal input terminal **402** is keyword group signal Ks comprised of a plurality of keywords. The keyword group signal Ks is comprised of keywords contained in the merchandise information.

[**0040**] Vector generating section (VGS) **403** transforms the keyword group signal Ks from character sequences to a vector signal V. In order to transform the character sequences to the vector signal V, a character sequence is employed of a code dictionary signal stored in code dictionary storage section (CDSS) **404**. Code dictionary storage section **404** stores character sequences of keywords of various merchandise in the form of code dictionary signals. When the same character sequence as a character sequence of a jth code dictionary signal is detected from the keyword group signal Ks, "1" is input to a jth vector component of the vector signal V. When the same character sequence as the character sequence of the jth code dictionary signal is not detected, "0" is input to the jth vector component of the vector signal V. Similar processing is repeated with respect to all the components of the vector signal V.

[**0041**] The keywords for "clothing" will be specifically described. In code dictionary storage section **404** are stored character sequences such as "shirt", "long sleeves", "short sleeves", "jeans", "chino pants", "skirt", "long", "short", "¥5,000 ~¥10,000", and "¥10,000~¥15,000" in addition to the seller ID and merchandise ID. **FIG. 5** is a table showing an example of data in code dictionary storage section **404** that stores the relationship between the character sequences of these keywords and the code dictionary signals.

[**0042**] Positive signal calculating section **405** calculates, using a positive metric signal, a positive signal SY such that a value thereof is large when the keyword group signal Ks contains a large number of keywords such that the consumer previously replied the keyword interested the consumer. Negative signal calculating section **406** calculates, using a negative metric signal, a negative signal SN such that a value thereof is large when the keyword group signal Ks contains a large number of keywords such that the consumer previously replied that the keyword did not interest the consumer.

[**0043**] The positive metric signal stored in positive metric storage section **407** is determined based on the keyword group signal Ks and a result of the reply indicative of that the consumer has an interest. The negative metric signal stored in negative storage section **408** is determined based on the keyword group signal Ks and a result of the replay indicative of that the consumer has no interest.

[**0044**] The positive metric signal and negative metric signal each are assigned a value (hereinafter referred to as "score") corresponding to presence or absence of consumer's interest in relation to each keyword. Assuming, in the above-mentioned specific example, that the consumer previously replied having an interest in the merchandise information containing "shirt" that is the keyword, the score corresponding to the number of times having an interest was replied is assigned to "shirt". Further assuming a simple example such that having an interest was replied four times, the score of 4 is assigned to "shirt". In contrast thereto, when the consumer previously replied having no interest or hating, the score corresponding to the number of times having no interest was replied is assigned to "shirt".

[**0045**] **FIG. 6** is a table showing examples of scores assigned to the specific example in **FIG. 5**. The positive signal SY and negative signal SN are obtained by calculating scores assigned corresponding to respective keywords.

[**0046**] Using the positive signal SY and negative signal SN, necessity calculating section (NCS) **409** calculates a necessity signal N according to an equation of $N=SY-C\cdot SN$ and further calculates a reliability signal R according to another equation of $R=C\cdot SY+SN$. The coefficient C is used to separate the merchandise information into pieces of the information that interested the consumer and pieces of the information that did not interest the consumer, and is provided from determination parameter storage section **410**. The necessity signal N and reliability signal R have a large value when there are a large number of keywords contained in the merchandise information such that the consumer

previously replied having an interest therein, and there are few keywords contained in the merchandise information such that the consumer previously replied having no interest therein. Each of pieces of the merchandise information distributed from merchandise information server **306** is rated based on the PPF by calculating the necessity signal N and reliability signal R at necessity calculating section **409**.

[**0047**] PPF storage section **309** is comprised of code dictionary storage section **404**, positive metric storage section **407**, negative metric storage section **408**, and determination parameter storage section **410** described above. In addition, various data to be stored in code dictionary storage section **404**, positive metric storage section **407**, negative metric storage section **408**, and determination parameter storage section **410** is stored in the learning processing described later. It is herein assumed that appropriate data subjected to the learning processing is already stored in the above sections.

[**0048**] Merchandise information write control section (MIWCS) **411** ranks the merchandise information pieces according to the rate assigned to each of the merchandise information pieces to write in merchandise information storage section (MISS) **412**. In merchandise information storage section **412** are arranged and stored the merchandise information pieces in descending order of a value of the necessity signal N.

[**0049**] **FIG. 7** is a table showing examples of the merchandise information pieces ranked in merchandise information storage **412** after learning preferences on "clothing" of a person. **FIG. 7** illustrates a case of using the merchandise information pieces containing keywords described below shown in **FIGS. 5 and 6**, where the coefficient C is "1":

Merchandise information $\hat{1}$: AAA (seller ID), AOO (merchandise ID), shirt and long sleeves;

Merchandise information $\hat{2}$: AAA (seller ID), skirt and ¥5,000 to ¥10,000;

Merchandise information $\hat{3}$: BBB (seller ID), skirt and ¥5,000 to ¥10,000;

Merchandise information $\hat{4}$ AAA (seller ID), A**00** (merchandise ID), shirt and half sleeves; and

Merchandise information $\hat{5}$: BBB (seller ID), skirt and ¥10,000 to ¥15,000.

[**0050**] In this case, in merchandise information storage section **412** are stored the merchandise information pieces in the order as shown in **FIG. 7**. In other words, according to the equation of the necessity signal described previously, necessity signals N are calculated as follows:

Merchandise information ④: $\{8+5+4+4\}(SY)-\{1\}(C)\cdot\{1+3+1+0\}(SN)=16(N)$;

Merchandise information ①: $\{8+5+4+0\}(SY)-\{1\}(C)\cdot\{1+3+1+0\}(SN)=12(N)$;

Merchandise information ②: $\{8+3+1\}(SY)-\{1\}(C)\cdot\{1+0+0\}(SN)=11(N)$;

Merchandise information ③: $\{1+3+1\}(SY)-\{1\}(C)\cdot\{5+0+0\}(SN)=0(N)$; and

Merchandise information ⑤: $\{1+3+0\}(SY)-\{1\}(C)\cdot\{5+0+0\}(SN)=-1(N)$.

[**0051**] Therefore, the merchandise information pieces $\hat{1}$ to **5** are ranked and stored as shown in **FIG. 7**.

[**0052**] Merchandise information output control section (MIOCS) **414** uses the merchandise information pieces ranked and stored in merchandise information storage section **412** to generate a predetermined learning and ordering screen, and transfers the screen to merchandise information client **307** through merchandise information output terminal **415**. Merchandise information client **307** displays this learning and ordering screen on, for example, a display of consumer terminal **103**. In addition, the learning and ordering screen will be described later along with the learning processing.

[**0053**] Thus, when receiving the merchandise information pieces distributed from merchandise information server **306**, a consumer is capable of watching the merchandise information pieces ranked according to previous inputs of the consumer indicative of interests or no interests thereof, using the display or the like of consumer terminal **103** without performing particular processing. As a result, the consumer is capable of placing an order for merchandise based on the merchandise information pieces ranked according to the preferences of the consumer.

[**0054**] The learning processing in information filtering section **308** will be described below. A preferable example of information filtering section **308** is an information filtering apparatus disclosed in Japanese Laid-open Patent Publication HE19-288683. In order to simplify the explanation, the simplest configuration is herein used to explain.

[**0055**] When information filtering section **308** receives a learning request from a consumer through merchandise information client **307**, the section **308** accesses to merchandise information server **306** to request the distribution of the merchandise information according to search criteria and the like contained in the learning request. Information filtering section **308** receives the merchandise information distributed from merchandise information server **306** in response to the distribution request.

[**0056**] The learning processing is such processing that learns PPF indicative of preferences of a consumer by analyzing keywords contained in the merchandise information, where the consumer inputs whether or not he/she has an interest in the merchandise information distributed from merchandise information server **306**. By performing the learning processing, PPF is stored in positive metric storage section **407** and negative metric storage section **408**.

[**0057**] When the learning processing has been already performed, information filtering section **308** ranks the distributed merchandise information pieces in the same way as in the filtering processing described above according to the stored PPF, and generates learning and ordering screen **800** as illustrated in **FIG. 8**. PPF is further updated according to a learning instruction of a consumer through learning and ordering screen **800**. An ordering instruction input through learning and ordering screen **800** is also subject to the learning processing on PPF.

[**0058**] In the step where the learning processing is not performed, PPF is not stored in positive metric storage section **407** and negative metric storage section **408**. Accordingly, since it is not possible to perform the above

processing, merchandise information pieces are written in merchandise information storage section **412** without being ranked. Merchandise information output control section **414** generates learning and ordering screen **800** illustrated in **FIG. 8** using a plurality of merchandise information pieces written in merchandise information storage section **412**. This learning and ordering screen **800** is transferred to merchandise information client **307** through merchandise information output terminal **415**. Merchandise information client **307** displays this learning and ordering screen on the display or the like of consumer terminal **103**.

[**0059**] As illustrated in **FIG. 8**, learning and ordering screen **800** is comprised of a plurality of merchandise information pieces **801**, buttons **802** (shown with "◎" and "x") for use in inputting "yes" or "no" as to whether a consumer is interested in each merchandise information piece, and learning button **803**. Each of merchandise information pieces **801** includes merchandise ID (M-ID), characteristics of merchandise (CM) and photograph (P). In addition, selecting a merchandise information piece places an order for the piece of the merchandise. In addition, a screen for use in performing the learning and ordering is not limited to a configuration illustrated in **FIG. 8**. For example, different screens may be provided as a screen for the learning and a screen for the ordering.

[**0060**] When the learning processing is performed, a consumer selects button **802** based on merchandise information **801** on learning and ordering screen **800** displayed on the display or the like of consumer terminal **103**, and thereby inputs as to presence or absence of interest. Then, selecting learning button **803** after finishing the input on the interests transmits the learning instruction to information filtering section **308**.

[**0061**] The learning instruction contains a teaching signal T to each merchandise information piece. The teaching signal T is a signal indicative of an interest or no interest of a consumer in each merchandise information piece. When information filtering section **308** receives the learning instruction through learning data input terminal **416**, the section **310** fetches the teaching signal T transmitted along with the learning instruction. The teaching signal T is stored in teaching data storage section (TDSS) **417** through merchandise information output control section **414**. Each teaching signal T is stored in teaching data storage section **417** along with the keyword group signal Ks and number-of-keyword signal nofKs assigned to each merchandise information piece.

[**0062**] After the teaching signal T and the others are stored in teaching data storage section **417**, a learning start signal is input to learning start signal input terminal **418**. When the learning start signal is input, learning control section (LCS) **419** makes switches **422**, **423** and **424** made to connect metric learning section (MLS) **420** and learning vector generating section (LVGS) **421**.

[**0063**] Metric learning section **420** fetches the teaching signal T, keyword group signal Ks and number-of-keyword signal nofKs from teaching data storage section **417**, and inputs the keyword group signal Ks and number-of-keyword signal nofKs to learning vector generating section **421**. Learning vector generating section **421** transforms the keyword group signal Ks to a learning vector signal LV using the code dictionary signal as well as vector generating section **403**.

[**0064**] The learning vector signal LV is input to metric learning section **420**. Metric learning section **420** corrects the positive metric signal in positive metric storage section **407** based on the learning vector signal LV corresponding to the teaching signal T indicative of having an interest, while correcting the negative metric signal in negative metric storage section **408** based on the learning vector signal LV corresponding to the teaching signal T indicative of having no interest.

[**0065**] The positive metric signal thereby has a large value with respect to the keywords included in the merchandise information piece that interests the consumer. Similarly, the negative metric signal thereby has a large value with respect to the keywords included in the merchandise information piece that hates the consumer.

[**0066**] Learning score calculating section (LSCS) **425** operates in a similar way to that in positive signal calculating section **405** and negative signal calculating section **406** to calculate a learning positive signal LSY and a learning negative signal LSN from the learning vector signal LV. Using the learning positive signal LSY and learning negative signal LSN, determination plane learning section (DPLS) **426** obtains the coefficient C that most accurately separates merchandise information pieces that interest the consumer and that do not interest the consumer. The coefficient C is expressed on a two-dimensional space using the positive signal SY and negative signal SN. The obtained coefficient C is stored in determination parameter storage section **410**. Storing the coefficient C in determination parameter storage section **410** finishes the learning processing. When the learning processing is finished, learning control section **419** outputs a learning finish signal from learning finish signal output terminal **427**.

[**0067**] After confirming that the learning finish signal is output, merchandise information write control section **411** inputs again each merchandise information piece, and the keyword group signal Ks and number-of-keyword signal nofks each assigned to the merchandise information piece stored in merchandise information storage section **412** to respective input terminals **400**, **401** and **402**. As a result, with respect to each merchandise information piece, the necessity signal N which is accurately reflective of interests (preference and taste) of the consumer is calculated based on the keywords assigned to the merchandise information piece. The merchandise information pieces are rearranged in descending order of the necessity signal N to be stored again in merchandise information storage section **412**. Merchandise information output control section **414** fetches the merchandise information pieces from merchandise information storage section **412**, generates learning and ordering screen **800** with the merchandise information pieces rearranged in descending order of the necessity signal N, and transfers the generated screen to merchandise information client **307**. Merchandise information client **307** displays this learning and ordering screen on the display or the like connected to consumer terminal **103**.

[**0068**] The consumer inputs a preference again if necessary, while watching the rearranged merchandise information pieces, and thereby searches the merchandise information matching with the consumer's preferences. By thus inputting "yes" or "no" on whether or not each distributed merchandise information piece interests the consumer, the

consumer is capable of obtaining PPF matching with the consumer's preferences. In this case, PPF matching with the preferences of a celebrity that is the consumer is stored in PPF storage section **309**.

[**0069**] The filtering processing on the merchandise information is thus performed using PPF reflective of consumer preferences, whereby it is possible to automatically decrease the evaluation on the merchandise information distributed from malicious sellers. For example, a case is considered that in order to increase a search hit rate of its own merchandise, a malicious seller inputs merchandise information that is not directly associated with the merchandise. In this case, when a consumer inputs "hate" in such merchandise information, the merchandise information containing the seller ID indicative of such a seller is assigned a negative score in PPF. It is thereby possible to automatically decrease the evaluation on the merchandise information distributed from such a seller. In other words, it is possible to provide an EC system such that consumers are capable of supervising distributed merchandise information, and to automatically increase the evaluations on sellers that distribute good merchandise information.

[**0070**] In addition, it is preferable to generate PPF as described above using the merchandise information distributed from merchandise information server **306** and the teaching signal T reflective of consumer preferences. However, the present invention is not limited to the foregoing, as long as consumer preferences are reflected. For example, it may be possible to generate PPF using only consumer preferences input according to a menu displayed on an internet browser.

[**0071**] In this embodiment is described the case where consumer terminal **103** is provided with PPF storage section **309** and grasps PPF. However, the present invention is not limited to the above case, and it may be possible that merchandise information distribution unit **102** is provided with a storage means corresponding to PPF storage section **309** to grasp PPF of a consumer operating consumer terminal **103**. However, in consideration of characteristics of PPF designed to be indicative of consumer preferences, it is preferable that PPF be provided on a side of consumer terminal **103** from the standpoint of protecting the privacy.

[**0072**] Also when merchandise information pieces are provided while the utilization of PPF by an ordinary person is permitted in PPF managing section **310** in merchandise information distribution unit **102** as described previously, information filtering section **308** similarly ranks the merchandise information pieces based on PPF stored in PPF storage section **309**. Then, the section **308** returns the ranked merchandise information pieces to PPF managing section **310**. PPF managing section **310** transmits the ranked merchandise information pieces to the ordinary person permitted to utilize PPF.

[**0073**] As well as consumer terminal **103**, consumer terminal **105** may be achieved by a general PC which is provided with a calculation processing means such as CPU and a storage means such as RAM and ROM, and which is connected to an input means such as a keyboard and a display means such as a display.

[**0074**] Further, consumer terminal **105** is provided with merchandise information client (MIC) **314**, information filtering section (IFS) **315** and PPF storage section (PPSS) **316** each having the same function as that in consumer terminal **103**. Accordingly, an ordinary person using consumer terminal **105** is also capable of ranking merchandise information pieces distributed from merchandise information server **306** based on PPF corresponding to preferences of the person, and placing an order for merchandise from the ranked merchandise information pieces.

[**0075**] In addition, information filtering section **315** has a function for switching using PPF of an ordinary person or using PPF of a celebrity according to an instruction of a user. The user instructs such switching to information filtering section **315** through merchandise information client **314** from the keyboard or the like of consumer terminal **105**.

[**0076**] Furthermore, consumer terminal **105** is provided with personal profile utilization querying section (hereinafter referred to as "PPF utilization querying section") (PPUQS) **317** for querying whether PPF of the celebrity is permitted to PPF managing section **310** of merchandise information distribution unit **102**. PPF utilization querying section **317** queries on the utilization of PPF corresponding to an instruction of an ordinary person that is a consumer. The ordinary person provides the instruction to PPF utilization querying section **317** through merchandise information client **314** from the keyboard and the like of consumer terminal **105**. When PPF utilization querying section **317** queries whether PPF of the celebrity is permitted, the section **317** transmits utilization information. For example, the utilization information includes information for proving a membership registered with a fan club of the celebrity to which the ordinary person belongs.

[**0077**] When the utilization of PPF of the celebrity is permitted, PPF utilization querying section **317** receives from information filtering section **315** the merchandise information distributed from merchandise information server **306** corresponding to search criteria designated by the ordinary person, and transmits the merchandise information to PPF managing section **310** of merchandise information distribution unit **102**. At the same time, PPF utilization querying section **317** transmits to PPF managing section **310** a signal (hereinafter referred to as "PPF utilization signal") including a consumer ID indicative of the person and a consumer ID indicative of the celebrity permitting the initialization of PPF. The PPF utilization signal is provided to an EC clearing section, described later, of electronic clearing unit **104** through PPF managing section **310**. On the other hand, when PPF utilization querying section **317** receives the rejection on the utilization of PPF of the celebrity, a message indicative of the rejection or a utilization permission application form is indicated on the display.

[**0078**] Electronic clearing unit **104** is provided with EC clearing section **312** that receives a merchandise ordering signal from merchandise information client **307** (**314**) through merchandise ordering section (MOS) **311**.

[**0079**] EC clearing section (ECCS) **312** inquires of financial institute or company (FIC) **313** whether an orderer has an ability to pay for the merchandise in response to the merchandise ordering signal. When the orderer has the ability to pay, the section **312** transmits an order receiving signal to merchandise order receiving section **303**. At the same time, the section **312** withdraws the merchandise charge from an account of the orderer. Meanwhile, when the

section **312** receives the PPF utilization signal from PPF managing section **310**, the section **312** withdraws the PPF utilization charge from an account of the ordinary person who uses PPF of the celebrity. Further, the section **312** pays the PPF utilization charge to an account of the celebrity who permits the utilization of PPF.

[**0080**] In addition, it is assumed herein that each celebrity uses consumer terminal **103** in EC system **100**, which is achieved by that an ordinary person purchases merchandise while referring to merchandise information pieces ranked according to PPF that is registered according to the utilization of the celebrity. Accordingly, it is naturally required to explain the concept of EC system **100** to the celebrity to gain its cooperation. Further, it is preferable for an agent who manages merchandise information distribution unit **102** or the like to promote the utilization of consumer terminal **103** by lending consumer terminals **103** to the celebrity at no charge or paying utilization charges for the utilization of consumer terminal **103** to the celebrity.

[**0081**] When paying the utilization charge of consumer terminal **103** to the celebrity, it is preferable to pay a charge corresponding to the utilization. In this case, it is considered that when EC clearing section **312** receives a merchandise ordering signal from consumer terminal **103** used by the celebrity, the section **312** pay the utilization charge of consumer terminal **103**, instead of withdrawing the charge of the merchandise.

[**0082**] Further, from the standpoint of promoting the utilization of consumer terminal **103**, it is effective to adopt a system for permitting the celebrity to purchase merchandise corresponding to a predetermined price (for example, £500, 000 per month) after gaining permission of sellers using EC system **100**.

[**0083**] When the system has the celebrity use the terminal **103** in this way, PPF of the celebrity is registered so as to increase scores of keywords assigned to the merchandise information of the seller from which the celebrity purchased the merchandise. The existence of ordinary people desiring to purchase merchandise matching with preferences of the celebrity increases the possibility that the merchandise of the seller is purchased. Accordingly, with considering the utilization charge as a charge for advertising the merchandise to ordinary people who want to purchase the merchandise using PPF of the celebrity, since a seller is considered to advertise the merchandise of the seller by using PPF reflective of preferences of a celebrity, also the seller is capable of obtaining adequate benefits.

[**0084**] With reference to **FIG. 3**, the operation will be described below when an ordinary person as a consumer of consumer terminal **105** places an order for merchandise using PPF of a celebrity as a consumer of consumer terminal **103**. In addition, it is assumed herein that PPF storage section **309** of consumer terminal **103** already stores PPF reflective of preferences of the celebrity.

[**0085**] An ordinary person who desires to use PPF of the celebrity instructs information filtering section **315** whether to use PPF of the person stored in PPF storage section **316** or to use PPF of the celebrity, from the keyboard or the like of consumer terminal **105** through information client **314**. It is assumed herein that the utilization of PPF of the celebrity is instructed.

[**0086**] At the same time as the instruction, the ordinary person designates search criteria of merchandise information that interests the person, from the keyboard or the like of consumer terminal **105** through merchandise information client **314**. Information filtering section **315** accesses to merchandise information server **306** according to the search criteria and receives distribution of the corresponding merchandise information.

[**0087**] When the utilization of PPF of the celebrity is instructed, PPF utilization querying section **317** queries whether the utilization of PPF is permitted to PPF managing section **310** of merchandise information distribution unit **102**. PPF managing section **310** examines the utilization information of the ordinary person transmitted with such a query to judge whether the utilization of PPF is permitted. It is herein assumed that the utilization of PPF of the celebrity is permitted.

[**0088**] When the utilization of PPF is permitted, information filtering section **315** transmits merchandise information pieces distributed from merchandise information server **306** to PPF managing section **310** through PPF utilization querying section **317**.

[**0089**] PPF managing section **310** provides the merchandise information pieces from consumer terminal **105** to information filtering section **308** of consumer terminal **103**. Information filtering section **308** performs the filtering processing described previously on the merchandise information pieces using PPF stored in PPF storage section **309**. The merchandise information pieces searched according to the search criteria designated by the ordinary person are thereby ranked according to PPF reflective of preferences of the celebrity.

[**0090**] After finishing the ranking (filtering processing) of the merchandise information pieces, information filtering section **308** returns the merchandise information pieces to PPF managing section **310**. Then, the merchandise information pieces are returned to PPF utilization querying section **317** of consumer terminal **105**.

[**0091**] PPF utilization querying section **317** provides the merchandise information pieces thus ranked according to the preferences of the celebrity to information filtering section **315**. When information filtering section **315** receives the ranked merchandise information pieces, the section **315** provides the merchandise information pieces to merchandise information client **314** without performing any processing thereon. Merchandise information client **314** displays the merchandise information pieces on the display or the like of consumer terminal **105**. At this point, the display or the like indicates the information pieces in the form of the learning and ordering screen illustrated in **FIG. 8**. Thus, the merchandise information pieces, which are searched according to search criteria designated by the ordinary person and then ranked according to the preferences of the celebrity, are indicated on the display or the like of consumer terminal **105**.

[**0092**] When the merchandise information pieces are indicated on the display or the like, the ordinary person selects a piece of merchandise to place an order therewith in the same way as in the general processing. At this point, the merchandise information pieces are ranked according to the preferences of the celebrity. Therefore, the ordinary person

is capable of purchasing a piece of merchandise corresponding to the preferences of the celebrity from merchandise information pieces searched according to the search criteria that the person designated.

[0093] In addition, when ranking the merchandise information pieces according to the preferences of the celebrity, information filtering section **308** of consumer terminal **103** receives the merchandise information pieces from consumer terminal **105** and performs the filtering processing on the received merchandise information pieces. Then, the section **308** returns only a result (ranked merchandise information pieces) of the filtering processing to consumer terminal **105**. Therefore, a case never occurs that PPF of reflective of the preferences of the celebrity is opened to public. It is thereby possible to assuredly protect the privacy of the celebrity.

[0094] In addition, when merchandise information pieces are ranked according to preferences of a celebrity, it is considered that PPF of the celebrity be downloaded from consumer terminal **1103** and that information filtering section **315** of consumer terminal **105** perform the filtering processing on PPF. In this case, since data provided as PPF are of scores corresponding to keywords contained in the merchandise information pieces, the downloading does not directly disturb the protection of the privacy. However, in order to assuredly protect the privacy of a celebrity, it is preferable that consumer terminal **103** performs the filtering processing as described in this embodiment.

[0095] Thus, according to EC system **100** according to the first embodiment, using PPF reflective of preferences of a celebrity, merchandise information pieces searched with search criteria designated by an ordinary person are ranked. It is thereby possible for the ordinary person to purchase merchandise corresponding to preferences of the celebrity by placing an order for the merchandise based on the ranked merchandise information pieces. In addition, the ranking of merchandise information pieces is performed in consumer terminal **103** used by the celebrity. Accordingly, it is possible to protect the privacy of the celebrity while allowing the purchase of merchandise matching with preferences of the celebrity.

[0096] Further, PPF reflective of preferences of a celebrity is registered easily by the celebrity selecting merchandise pieces through consumer terminal **103**. Accordingly, it is not necessary to handle an interview of a magazine or the like, and therefore preferences of a celebrity can be reflected in a short time. As a result, since current preferences of the celebrity are reflected, it is possible to cope with the problem that the celebrity preference changes with the passage of time. It is thereby possible to purchase the merchandise corresponding to the current preferences of the celebrity.

[0097] In addition, in this embodiment is described the case where EC system **100** is only connected to consumer terminal **105** that an ordinary person uses and consumer terminal **103** that a celebrity uses. However, it is actually expected that the system **100** be connected to a plurality of consumer terminals used by a plurality of celebrities as well as ordinary people. In this case, PPF managing section **310** presents a list of celebrities permitting the utilization of their PPF to ordinary people who query on the permission of the utilization of PPF. Meanwhile, it is preferable to enable ordinary people to designate a celebrity through merchandise information client **314**.

[0098] Further, in this embodiment is described the case where merchandise information pieces searched with search criteria designated by an ordinary person are ranked corresponding to preferences of a celebrity. However, the present invention is not limited to the ranking of the merchandise information, and any means maybe possible which is capable of conveying preferences of a celebrity to ordinary people. How to display the merchandise information pieces on the display means is not limited in particular as long as the pieces are displayed corresponding to preferences of a celebrity. One of example is to display merchandise information pieces ranked corresponding to preferences of a celebrity. Namely, changing a way of indication of merchandise information pieces corresponding to preferences of a celebrity is included in the gist of an e-commerce system of the present invention. For example, it may be possible to assign a specific mark indicative of the degree of interest of a celebrity to the distributed merchandise information.

[0099] This case may be, for example as illustrated in the lowest columns in **FIG. 8**, achieved by assigning the specific mark indicative of the degree of interest of a celebrity to an area of each merchandise information **801** of the learning and ordering screen. In the figure, as the simplest case, a number of marks of ★ corresponding to the degree of interest of a celebrity are assigned. In other words, the merchandise information with a larger number of marks of ★ indicates that the degree of interest therein of a celebrity is greater. This case enables the judgment on preferences of a celebrity without performing the ranking according to preferences of a celebrity like this embodiment.

[0100] Further, EC system **100** is based on the premise that a celebrity uses consumer terminal **103**. Therefore, when the celebrity places an order for the merchandise using the terminal **103**, a seller of merchandise is capable of recognizing the order from the consumer ID and so on contained in the merchandise ordering signal. Accordingly, based on the premise that the seller gains permission of the celebrity, it is possible for the seller to change the merchandise metadata assigned to the merchandise based on the fact that the celebrity purchased the merchandise. For example, the seller is capable of inputting the merchandise metadata of a "favorite of celebrity A".

[0101] According to EC system **100**, since it is possible to change the merchandise metadata corresponding to the shopping trend of a celebrity, it is possible to present merchandise information more valuable to consumers. Further, since the merchandise information more valuable to consumers is presented, sellers are capable of expecting increases in sales of merchandise. In addition, with respect to a piece of merchandise on which a celebrity replies the merchandise "does not match with the celebrity taste", since there is a possibility of having an adverse effect on purchase trends, it is preferably to adopt a configuration for indicating only pieces of merchandise matching with the taste without indicating pieces of merchandise not matching with the taste.

[0102] Further, the merchandise metadata assigned to the merchandise purchased by a celebrity may be analyzed to reflect the analysis result in the merchandise metadata of another piece of merchandise. In this case, when a consumer exists who uses PPF of the celebrity, it is expected that the another piece of merchandise reflective of the analysis result

is placed also in a higher rank. Therefore, the possibility that the another piece of merchandise is purchased is increased, and increases in sales are expected.

[0103] Furthermore, in this embodiment is described the case where PPF managing section **310** that judges whether or not to permit an ordinary person to use PPF is provided in merchandise information distribution unit **102**. However, the present invention is not limited to the above case, and it may be possible to provide PPF managing section **310** in consumer terminal **103** that a celebrity uses. When thus changing, since consumer terminal **103** that the celebrity uses is capable of managing the utilization criteria of PPF of the celebrity, it is possible to provide EC system **100** more excellent in protecting the privacy.

[0104] In addition, while in this embodiment is described the case where consumer terminal **103** (**105**) is provided with information filtering section **308** (**315**) and PPF storage section **309** (**316**), the present invention is not limited to the above case. In other words, it may be possible that merchandise information distribution unit **102** is provided with all the structural elements except merchandise information client **307** (**314**) and that consumer terminal **103** (**105**) is provided with only merchandise information client **307** (**314**) with the WEB browsing function. In this case, even with consumer terminal **103** (**105**) with only the WEB browsing function and with no specific other configuration, consumers are capable of joining EC system **100**.

Second Embodiment

[0105] In the first embodiment, information filtering section **315** of consumer terminal **105** switches selectively using PPF of the terminal **105** (ordinary person) or using PPF of another person (celebrity). In contrast thereto, in EC system **200** according to the second embodiment, information filtering section **901** of consumer terminal **105** uses both PPFs (of ordinary person and celebrity), and in this respect, differs from the first embodiment.

[0106] **FIG. 9** illustrates a specific configuration of EC system **200** according to the second embodiment. Since **FIG. 9** illustrates the same configuration as **FIG. 3** except information filtering section **901** of consumer terminal **105**, descriptions on the configuration except information filtering section **901** are omitted.

[0107] In addition, the specific configuration of information filtering section **901** is basically the same as the configuration illustrated in **FIG. 4**. However, merchandise information write control section **411** is different in being further provided with a function corresponding to the feature for using PPFs of both an ordinary person and celebrity as described above.

[0108] As described above, information filtering section **901** uses PPFs of both an ordinary person and celebrity. Information filtering section **901** thereby reflects preferences of both the ordinary person and celebrity in merchandise information pieces distributed from merchandise information server **306**. Accordingly, the merchandise information pieces are ranked corresponding to preferences of both the ordinary person and celebrity.

[0109] As functions for reflecting preferences of both the ordinary person and celebrity in merchandise information pieces, information filtering section **901** has, for example, a function for adding degrees of interests of both people to perform ranking and another function for performing ranking corresponding to the degree of interest of either one, while indicating the degree of interest of the other one in relation to the ranked merchandise information pieces.

[0110] The former function is achieved by performing ranking corresponding to the sum of necessity signals N each of which is calculated based on scores of respective PPF. The latter function is achieved by ranking a merchandise information piece corresponding to the necessity signal N calculated based on scores of PPF of either one, while assigning to the same merchandise information piece a specific mark indicative of the degree of interest corresponding to the necessity signal N calculated based on scores of PPF of the other one.

[0111] In addition, these functions of information filtering section **901** are switched corresponding to destination of an ordinary person as a consumer. The ordinary person designates the designation of switching between these functions from the keyboard or the like of consumer terminal **105** through merchandise information client **314**.

[0112] The operation will be described below of cases where an ordinary person as a consumer places an order for merchandise using PPFs of both the ordinary person and celebrity in EC system **200** according to the second embodiment. A case will be described first where the ordinary person selects the function for adding degrees of interests of both people to perform ranking in information filtering section **910**.

[0113] In addition, it is herein assumed that PPFs reflective of preferences of the celebrity and ordinary person are already registered respectively with PPF storage-section **309** of consumer terminal **103** and PPF storage section **316** of consumer terminal **105**.

[0114] The ordinary person using consumer terminal **105** designates search criteria of merchandise information interesting the person from the keyboard or the link of consumer terminal **105** through merchandise information client **314**, and instructs the search of merchandise information. At the same, the person further instructs information filtering section **901** how to use PPFs of the ordinary person and celebrity from the keyboard or the link of consumer terminal **105** through merchandise information client **314**. It is herein assumed to select the function for adding degrees of interests of both people to perform ranking. At this point, a message indicative of using PPF of the celebrity is notified to PPF utilization querying section **317** through merchandise information client **314**.

[0115] When the information filtering section **315** receives these instructions, the section **315** first accesses to merchandise information server **306**, and receives the distribution of the corresponding merchandise information according to the designated search criteria.

[0116] Meanwhile, when PPF utilization querying section **317** receives the notification indicative of using PPF of the celebrity, the section **317** queries whether the utilization of PPF is permitted to PPF managing section **310** of merchandise information distribution unit **102**. PPF managing section **310** examines the utilitarian information of the ordinary person transmitted along with the query, and judges whether

or not to permit the utilization of PPF of the celebrity. It is herein assumed to permit the utilization of PPF of the celebrity.

[0117] When the utilization of PPF of the celebrity is permitted, information filtering section **901** performs the filtering processing on the merchandise information pieces distributed from merchandise information server **306**, using PPF of the person stored in PPF storage section **316**. The merchandise information pieces ranked according to preferences of the person are thus obtained. Information filtering section **901** temporarily stores the thus ranked merchandise information pieces.

[0118] At the same time as the above processing, information filtering section **901** transmits the merchandise information pieces distributed from merchandise information server **306** to PPF managing section **310** through PPF utilization querying section **317**. PPF managing section **310** provides the merchandise information pieces from consumer terminal **105** to information filtering section **308** of consumer terminal **103**.

[0119] When information filtering section **308** receives the merchandise information pieces, the section **308** performs the filtering processing on the merchandise information pieces, using PPF stored in PPF storage section **309**. The merchandise information pieces searched with the search criteria designated by the ordinary person are thus ranked corresponding to preferences of the celebrity.

[0120] When information filtering section **308** completes the ranking (filtering processing) on the merchandise information pieces, the section **308** returns the merchandise information pieces to PPF managing section **310**. The merchandise information pieces are returned to PPF utilization querying section **317** of consumer terminal **105**.

[0121] PPF utilization querying section **317** provides the merchandise information pieces ranked corresponding to preferences of the celebrity to information filtering section **901**. When information filtering section **901** receives the merchandise information pieces, the section **901** further ranks the merchandise information pieces using the ranking of the merchandise information pieces corresponding to preferences of the person and the ranking of the merchandise information pieces corresponding to preferences of the celebrity. Namely, the section **901** ranks using preferences of the person and preferences of the celebrity with both considered.

[0122] Specifically, the ranking is performed corresponding to a sum of necessity signals N calculated from each merchandise information piece, whereby the overall ranking is determined based on preferences of the person and preferences of the celebrity.

[0123] **FIG. 10** is a table showing examples of-merchandise information pieces subjected to the overall ranking using preferences of the person and preferences of the celebrity. **FIG. 10** uses the examples of merchandise information pieces shown in **FIG. 7**. The necessity signals in **FIG. 7** are replaced with necessity signals Na in **FIG. 10**.

[0124] Necessity signals Nb illustrated in **FIG. 10** denote necessity signals N calculated based on preferences of the celebrity. It is understood from the necessity signals, the celebrity is interested in merchandise information pieces **1**, **4**, **3**, **2**, and **5** in this order. Information filtering section **901** determines the ranking of the merchandise information pieces based on the sum of the necessity signal Na of the ordinary person and the necessity signal Nb of the celebrity.

[0125] In addition, merchandise information write control section **411** illustrated in **FIG. 4** performs such processing for calculating the sum of the necessity signal Na of the ordinary person and the necessity signal Nb of the celebrity to perform the ranking. In this case, merchandise information pieces **1** to **5** are ranked as shown in **FIG. 10**, and are stored in merchandise information storage section **412**.

[0126] In the same way as in the first embodiment, merchandise information output control section **411** generates learning and ordering screen **800** as illustrated in **FIG. 8**, using the thus ranked merchandise information pieces in merchandise information storage section **412**. Assuming that the rank is decreased in the rightward direction and in the downward direction in learning and ordering screen **800** in **FIG. 8**, merchandise information pieces **1**, **4**, **3** and **2** are indicated respectively in the most upper left, center-left, and center-right, and right columns, while merchandise information piece **5** is indicated in the second upper left column on the example shown **FIG. 10**. Such learning and ordering screen **800** is transferred to merchandise information client **314** through merchandise information output terminal **415**. Merchandise information client **314** indicates such learning and ordering screen **800** on the display or the like of consumer terminal **105**.

[0127] When the ordinary person thus receives the distribution of merchandise information from merchandise information server **306**, the person is capable of watching the merchandise information pieces ranked with previous preferences of the ordinary person and of the celebrity reflected, using the display or the like of consumer terminal **105**. Then, the ordinary person is capable of placing an order for merchandise based on such merchandise information.

[0128] According to the foregoing, it is possible for an ordinary person to place an order for merchandise, while watching the merchandise information ranked with not only preferences of the celebrity buy also preferences of the person. Accordingly, the ordinary person is capable of selecting the merchandise corresponding to preferences of the person as well as preference of the celebrity to place an order therefor. In other words, the ordinary person is capable of selecting the merchandise which corresponds to preferences of the celebrity and which is also provided with the taste of the person.

[0129] A case will be described next where an ordinary person selects the function for ranking the merchandise information corresponding to the degree of either person, while indicating the degree of interest of the other person in relation to the ranked merchandise information.

[0130] In the same way as in the above case, the ordinary person using consumer terminal **105** designates search criteria of merchandise information interesting the person from the keyboard or the link of consumer terminal **105** through merchandise information client **314**, while instructing information filtering section **901** how to use PPFs of the ordinary person and celebrity.

[0131] It is herein assumed to select the function for ranking merchandise information corresponding to the degree of either person, while indicating the degree of interest of the other person in relation to the ranked merchandise information. In particular, it is assumed to instruct to rank the merchandise information corresponding to preferences of the person, while indicating the degree of interest of the celebrity in relation to the ranked merchandise information.

[0132] In the same way as previously described, information filtering section **901** performs the filtering processing on the merchandise information distributed from merchandise information server **306** according to he search criteria, using PPF of the person stored in PPF storage section **316**, while providing the distributed merchandise information to information filtering section **308** through PPF utilization querying section **317** and PPF managing section **310**, and receiving the merchandise information subjected to the filtering processing using PPF of the celebrity stored in PPF storage section **309**.

[0133] When information filtering section **901** thus receives the merchandise information pieces ranked corresponding to preferences of the celebrity, the section **901** indicates a scale of the degree of interest of the celebrity in relation to each merchandise information piece ranked and stored in advance corresponding to preferences of the ordinary person.

[0134] Specifically, each merchandise information piece is assigned a specific mark indicative of the degree of interest of the celebrity corresponding to the necessity signal N calculated from the merchandise information piece.

[0135] **FIG. 11** shows an example of the case of indicating the degree of interest of a celebrity in relation to the merchandise information piece ranked according to preferences of an ordinary person. **FIG. 11** uses the example shown in **FIG. 7**. The necessity signals N in **FIG. 7** are replaced with necessity signals Na in **FIG. 11**.

[0136] Necessity signals Nb illustrated in **FIG. 11** denote necessity signals N calculated based on preferences of the celebrity. It is understood from the necessity signals, the celebrity is interested in merchandise information pieces **1**, **4**, **3**, **2**, and **5** in this order. The specific marks corresponding to such a degree of interest are assigned.

[0137] In **FIG. 11**, assigned as specific marks indicative of the degree of interest of the celebrity are a large white circle (○) for the necessity signal of +5, a small white circle (○) for the necessity signal of +1, a large black circle ● for the necessity signal of −5, and a small black circle ● for the necessity signal of −1.

[0138] In addition, it is preferable in managing EC system **200** not to indicate negative marks (● in the above case) among the specific marks indicative of the degree of interest of a celebrity.

[0139] The present invention is not limited in specific mark to the example shown in **FIG. 11**. Any marks corresponding to the degree of interest of a celebrity may be used. For example, it may be possible to use as specific marks a mark indicative of a smiling face for a large value of the degree of interest, a mark indicative of a normal face for an average vale thereof, and a mark indicative of a crying face for a small value of thereof.

[0140] In addition, merchandise information write control section **411** illustrated in **FIG. 4** performs the processing for assigning a specific mark corresponding to the necessity signal Nb of a celebrity to the result based on the necessity signal Na of an ordinary person. In this case, merchandise information pieces **1** to **5** are ranked as shown in **FIG. 11**, while being assigned specific marks shown in **FIG. 11** to be in stored in merchandise information storage section **412**.

[0141] As in the first embodiment, merchandise information output control section **414** generates learning and ordering screen **800** as shown in **FIG. 8**, using the thus ranked merchandise information in merchandise information storage section **412**. Assuming that the rank is decreased in the rightward direction and in the downward direction in learning and ordering screen **800** in **FIG. 8**, merchandise information pieces **4**, **1**, **2**, and **3** are indicated respectively in the most upper left, center-left, and center-right, and right columns, while merchandise information piece **5** is indicated in the second upper left column on the example shown **FIG. 11**. Then, for example, the indication that corresponds to the necessity signal Nb is added to an area of merchandise information **801** of each column. Such learning and ordering screen **800** is transferred to merchandise information client **314** through merchandise information output terminal **415**. Merchandise information client **314** displays such learning and ordering screen **800** on the display or the like of consumer terminal **105**.

[0142] When an ordinary person thus receives the distribution of merchandise information from merchandise information server **306**, the ordinary person is capable of watching the previously ranked merchandise information reflective of preferences of the ordinary person with the degree of interest of the celebrity indicated on each merchandise information. Then, the person is capable of placing an order for merchandise based on such merchandise information.

[0143] It is thereby possible for an ordinary person to confirm how the celebrity evaluates each merchandise while watching the merchandise information ranked according to preferences of the person. Accordingly, it is possible for the person to place an order for merchandise matching primarily with preferences of the person and also with preferences of the celebrity.

[0144] Thus, according to EC system **200** according to the second embodiment, by using PPFs reflective of both an ordinary person and celebrity, merchandise information pieces are ranked while being reflective of preferences of both people. Placing an order based on the thus ranked merchandise information pieces enables the ordinary person to select the merchandise information matching with preferences of the celebrity as well as matching with preferences of the person.

[0145] In addition, while in the above description is indicated the case of ranking merchandise information corresponding to the degree of interest of an ordinary person, while indicating the degree of interest of a celebrity in relation to the ranked merchandise information. However, the present invention is not limited to the above case, and it may be naturally possible to rank merchandise information corresponding the degree of interest of a celebrity, while indicating the degree of interest of an ordinary person in

relation to the ranked merchandise information. In this case, it is possible for an ordinary person to place an order for merchandise matching primarily with preferences of the celebrity and also with preferences of the ordinary person.

[0146] As described above, according to the present invention, the system has a celebrity register PPF which is registered corresponding to preferences by purchasing merchandise and which is excellent in privacy protection, and enables ordinary people to use such PPF, whereby it is possible for the ordinary people to purchase the merchandise matching with current preferences of the celebrity while protecting the privacy of the celebrity.

[0147] The present invention is not limited to the above described embodiments, and various variations and modifications may be possible without departing from the scope of the present invention.

[0148] This application is based on the Japanese Patent Application No. 2000-340741 filed on Nov. 8, 2000, entire content of which is expressly incorporated by reference herein.

What is claimed is:

1. A consumer terminal, comprising:

a storage section that stores a personal profile in which various keywords contained in merchandise information distributed from a merchandise information server and evaluation values corresponding to the keywords are registered, the evaluation values being learned in advance based on a preference of a consumer; and

an information filtering section that ranks the distributed merchandise information distributed from the merchandise information server to match the preference of the consumer, based on the personal profile,

the consumer terminal being configured to transfer distributed merchandise information to an information filtering section of another consumer terminal, and place an order for merchandise using merchandise information transferred to the other consumer terminal and ranked by the other consumer terminal using a personal profile stored in a storage section of the other consumer terminal.

2. The consumer terminal according to claim 1, further comprising a querying section that queries whether the utilization of the personal profile stored in the storage section of the other consumer terminal is permitted, wherein the merchandise information distributed is transferred to the information filtering section of the other consumer terminal when the utilization of the personal profile stored in the storage section of the other consumer terminal is permitted.

3. The consumer terminal according to claim 1, wherein the consumer terminal is configured to allow a consumer that uses the terminal to designate a consumer who uses the other consumer terminal

4. The consumer terminal according to claim 3, wherein the consumer who uses the other consumer terminal is a celebrity.

5. An e-commerce method for distributing merchandise information provided from a seller to a plurality of consumers and receiving an order for merchandise from a consumer, comprising:

distributing merchandise information provided from a seller to a consumer terminal;

storing, in a first consumer terminal, a personal profile in which various keywords contained in merchandise information and evaluation values corresponding to the keywords are registered, the evaluation values being learned in advance based on a preference of a consumer;

ranking, by the first consumer terminal, the distributed merchandise information to match a preference of the consumer based on the personal profile;

transferring distributed merchandise information from the first consumer terminal to a second consumer terminal;

ranking, by the second consumer terminal, the transferred distributed merchandise information based on a personal profile stored in the second consumer terminal;

placing an order, by the first consumer terminal, for merchandise using the merchandise information ranked by the second consumer terminal; and

withdrawing a charge of merchandise from an account designated by the consumer to pay to a seller when receiving an order for merchandise from the first consumer terminal,

6. The e-commerce method according to claim 5, further comprising:

querying, by the first consumer terminal, whether the personal profile stored in the second consumer terminal is permitted to be utilized, and

transferring the merchandise information distributed to the first consumer terminal to the second consumer terminal when the personal profile stored in the second consumer terminal is permitted to be utilized.

7. The e-commerce method according to claim 6, further comprising:

providing notification of the permission when the personal profile stored in the second consumer terminal is permitted to be utilized, withdrawing a utilization charge from the account designated by the consumer using the first consumer terminal, and paying the utilization charge to another consumer who uses the second consumer terminal and provides the personal profile stored in the second terminal.

8. The e-commerce method according to claim 5, further comprising:

designating, by a user of the first consumer terminal, a consumer who uses the second consumer terminal.

9. The e-commerce method according to claim 8, wherein the consumer who uses the second consumer terminal is a celebrity.

* * * * *