May 29, 1962 J. F. MOTSON 3,037,137

FLEXIBLE LIGHT SOURCE

Filed May 18, 1959

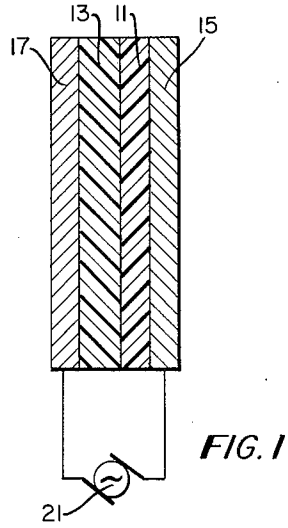

FIG. 1

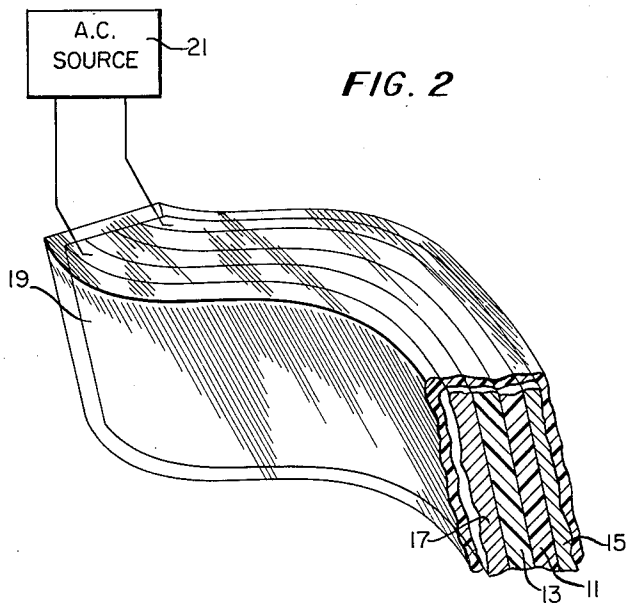

FIG. 2

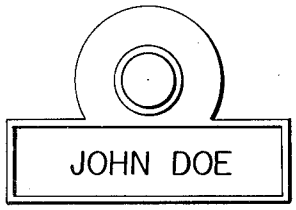

FIG. 4

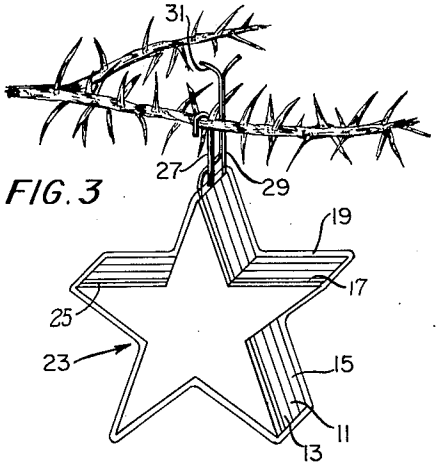

FIG. 3

FIG. 5

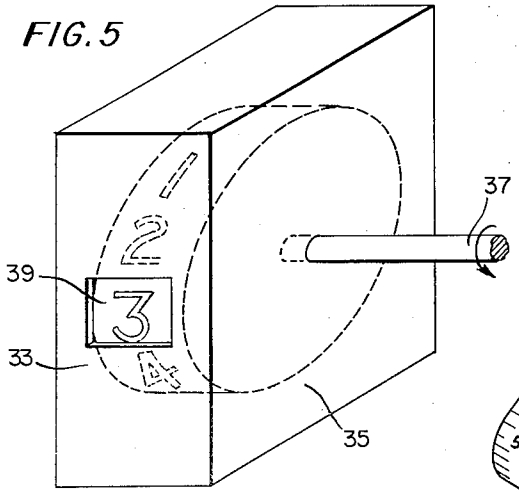

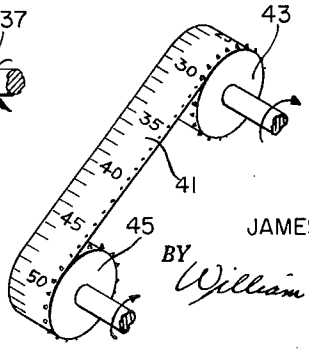

FIG. 6

INVENTOR.

JAMES F. MOTSON

BY *William E. Cleaver*

AGENT

United States Patent Office 3,037,137 Patented May 29, 1962

3,037,137

FLEXIBLE LIGHT SOURCE

James F. Motson, 798 Welsh Road, Huntingdon Valley, Pa.

Filed May 18, 1959, Ser. No. 813,740
2 Claims. (Cl. 313—108)

This invention relates to light sources and in particular to light sources which are packaged to be compact and flexible.

Heretofore light sources used in maintenance work have been generally of the non-flexible type. For instance, customarily people doing maintenance or repair work have depended on a drop light, or the everyday flashlight, to provide a source of light at the area upon which the work was being done. Such light sources have been only partially satisfactory because some areas were inaccessible due to the lack of room for advantageous placement of the bulky package of the drop light, or the flashlight and, thus, these areas could not be illuminated.

Efforts have been made to provide flexible sources of light, for instance in the form of a section of flexible cable. Such cable, while flexible, does have certain rigid characteristics, such as BX cable. In this last-mentioned arrangement a small bulb is held on the end of the cable. While such an arrangement does provide light into areas which may be inaccessible to the drop light, or the flashlight, this cable light is, of course, limited by the thickness of the cable and the bulb.

In the field of ornamental lighting, novelty lighting, or novel utility lighting heretofore the efforts have been confined to different arrangements of incandescent light bulb packages, such as the "bubblers" for Christmas trees; or in the extreme, neon lights, as used in advertising signs. Such novelty lighting is unsatisfactory in that there is relatively heavy electrical power consumption and distracting electrical components, such as sockets, or taped joints, which take away from decorative appeal of the ornament.

It can be recognized that a light source which is extremely flexible and compact so as to be shaped irregularly for positioning in highly inaccessible areas and yet not be limited by cable and bulb thickness would be highly desirable, especially in maintenance work. It can also be recognized that a novel ornament device, which can assume virtually any shape, which is self-illuminating for use in decorations such as on Christmas trees, or in decorative utility such as door bell name plates, which would consume very little electrical power would be highly desirable.

It is therefore an object of the present invention to provide an improved compact and flexible light source.

It is a further object of the present invention to provide an ornamental omni-directional or directed light source which can be formed into substantially any particular shape.

In accordance with a main feature of the present invention there is provided a layer of electroluminescent material which is flexible, first and second layers of flexible electrical conducting material (with at least one layer being transparent), bonded to the opposite sides of said electroluminescent layer to provide a source of light mounted in or on a thin, flexible housing.

In accordance with another main feature of the present invention the layers of the last-mentioned feature can be formed according to any particular shape to provide a self-illuminating ornament device.

In accordance with another main feature of the present invention both of the electrical conducting layers of the first feature above can be transparent to provide an omni-directional light source.

The foregoing and other objects and features of this invention will be best understood by reference to the following description of the invention taken in conjunction with the accompanying drawings, wherein:

FIG. 1 is a schematic side view of the basic light source package;

FIG. 2 is a pictorial schematic (with an end sectional) showing the flexibility of the present inventive light source housing;

FIG. 3 shows a self-illuminating ornament;

FIG. 4 shows a door bell name plate utility of the flexible light source;

FIG. 5 shows a pictorial of the flexible tape light package on a drum;

FIG. 6 shows a pictorial of a flexible tape light package driven by sprockets.

Referring particularly to FIG. 1 there is shown the basic light source package. The layer **11** is a flexible strong plastic base. Such a layer can be a polyester film such as Mylar, or a plastic material such as Teflon. Both Mylar and Teflon are manufactured and sold by E. I. du Pont de Nemours and Company, Wilmington, Delaware. Although a flexible, strong plastic layer is shown at **11** it is to be understood that the basic flexible layer upon which the light source is mounted can be a flexible metal such as a sheet of aluminum. If such a metal is used it serves in the dual role of being the basic building, or mounting, layer as well as the back electrical conducting layer. In the embodiment of the present invention depicted in FIG. 1 the basic building layer **11** is a flexible transparent plastic, such as Mylar, which can be used in a light source providing omni-directional light.

One surface of the layer **11** is "roughed" to provide good adherence and to this "roughed" side there is bonded a layer **13** of electroluminescent material. The electroluminescent material can be a combination of any of the well-known electroluminescent phosphors such as zinc sulphide, with a suitable activator such as copper powder, held in an appropriate vehicle such as epoxy resin. Other phosphors, activators and vehicles can obviously be used to effect different degrees of brightness, lamp life, and light color.

The layers **15** and **17** are the electrode layers necessary to provide an electrostatic field across the electroluminescent layer **13** to cause the emission of light therefrom. The layers **15** and **17** can take many forms, such as stainless steel mesh, if the electrode layers are to be transparent; or a conducting metal paint, if transparency is not a requirement; or vaporized metal which also permits transparency. In the preferred embodiment a coating of epoxy resin is applied to the electroluminescent layer **13**, and a layer **17** of stainless steel 260 mesh is pressed into the epoxy resin, then the package is cured. If the final product is to be an ornament having omni-directional light then layer **15** is also, in the preferred embodiment, a layer of stainless steel 260 mesh, pressed into an epoxy resin and cured. On the other hand, if the final product is to have directed light, such as the maintenance light of FIG. 2 or the tape of FIGS. 5 and 6, then one electrode such as the layer **15** of FIG. 1 may be a layer of reflecting, conducting metal paint such as silver metal paint. Silver metal paint has the advantages of providing good conductivity and also of reflecting light.

In FIG. 1, for purposes of clarity in connection with the above description there is not shown any encapsulating layer as is shown by the potting material layer **19** of FIGS. 2 and 3. Such an encapsulating layer of course would be present with the embodiment of FIG. 1 in actual use to prevent electrical shocks to the user of the light.

In FIG. 2 the flexible light is shown pictorially to be partially rolled for placement into an area heretofore inaccessible. The layers **11**, **13**, **15** and **17** are, in the preferred embodiment, as described in connection with

FIG. 1. The encapsulating material **19** can be, in addition to the popular potting materials, two layers of Mylar, or polyester film, which are sealed at the edges. The encapsulating material needs to be transparent, have high electrical insulation qualities, and flexible. The light packages of FIGS. 1 and 2 show the electrode layers **15** and **17** connected to a source of A.-C. voltage **21**.

In FIG. 3 the feature of particularly shaping the light package is depicted by a Christmas tree ornament **23**, in the form of a star. The layers **11**, **13**, **15**, **17** and **19** are again shown and are of the same material as discussed above in connection with FIGS. 1 and 2. In the ornament of FIG. 3 the electrode layers **15** and **17** would both be transparent. In addition in FIG. 3 there is shown a layer **25** of color selected photoluminescent material. The layer **25** provides a selected color to the ornament **23** in accordance with the principle discussed in my copending U.S. patent application entitled "Indicia Bearing Device," Serial No. 796,876, filed March 3, 1959. The layer **25** could in fact be multicolored layers of photoluminescent material to provide a multicolored ornament. A hook **27** is provided, connected to the plastic layer **11** for hanging the ornament. As depicted in FIG. 3 the wires **29** to the electrode layers **15** and **17** are simply connected without a socket to the parallel wire **31** available around the tree, thereby minimizing the distraction from the decoration, as suggested above, which is attributal to electrical connections. Obviously, for interchangeability of the ornament, a plug can be provided at the parallel wire **31** level. Such last-mentioned arrangement however does keep the connection away from the ornament proper to insure the full decorative effect of the ornament.

FIG. 4 shows the invention in a decorative-utility role. The name plates can be photo-printed according to the technique described in my Patent No. 2,382,806, entitled "Synthetic Plastic Articles and Methods of Making the Same," issued August 14, 1945. The name plates will then reflect some predetermined color in the natural light, for instance the color white, and at night will be illuminated with the light emitted from the light source in back of the name display plate.

In FIG. 5 there is shown the present inventive flexible light source in the form of tape **33** which is mounted on a drum **35**. The drum **35** is rotated by the shaft **37**, while simultaneously the numerals on the tape **33** are illuminated. The layers making up the light package (tape **33**) are not shown in FIG. 5 but it is to be understood that the layers include two electrodes with a layer of electroluminescent material mounted on a flexible plastic base sandwiched between the electrodes (such as shown in FIG. 2). In addition, there is mounted over the transparent electrode an additional layer of flexible opaque material, which has numerals cut therefrom or formed therein, to enable the light to pass through in the numeral areas and thereby provide illuminated numerals. In FIG. 5 the electrical connections are not shown, for purposes of simplicity, but is to be understood that the power supply leads are connected to a commutator arrangement to provide electrical power to the electroluminescent layer during rotation. As the drum rotates the illuminated numerals are seen in the window **39** of the housing. Such an arrangement has utility in disc-type meters where an illumination, for instance during night operations, is required.

In FIG. 6 a tape arrangement **41** of the flexible light source is shown driven by two sprockets **43** and **45** in a fashion similar to a movie projector. The tape can be extremely long. The tape **41** includes all the layers described in connection with the tape of FIG. 5, and as did the tape in FIG. 5, the tape **41** includes an additional layer of opaque flexible material such as black Mylar, with numerals cut therefrom. In addition the tape shown in FIG. 6 has found great utility wherein there is also provided a multicolored layer of photoluminescent material

disposed beneath the opaque material, that is, between the transparent electrode of the electroluminescent lamp and the opaque material with the "cut-out" letters. The utility becomes apparent if, for instance, the tape **41** number thirty-two represented a critical temperature and the sprockets **43** and **45** were driven by a temperature control. The photoluminescent material can be color arranged so that as the tape number forty appeared a warning color also would be seen and the numbers down to 32 would appear in greater degrees of severe warning colors (pink to red). As was suggested in connection with the description of FIG. 5, the tape **41** is connected electrically through a commutator arrangement to provide the A.-C. voltage across the electroluminescent layer of the tape.

While I have described above the principles of my invention in connection with specific apparatus, it is to be clearly understood that this description is made only by way of example and not as a limitation to the scope of my invention as set forth in the objects thereof and in the accompanying claims.

I claim:

1. A light source having a flexible housing comprising a layer of polyester film having first and second sides; a plurality of electroluminescent phosphors held in a flexible layer of epoxy resin material, said layer of epoxy resin having first and second sides and having its second side bonded to the first side of said polyester film; a first flexible electrode means bonded to said first side of said layer of epoxy resin; a second flexible electrode means bonded to said second side of said polyester film, at least one of said electrodes being transparent; and means coupled to said first and second electrode means for connecting thereacross a source of voltage to pass an electrostatic field through said electroluminescent material for causing radiation of luminous energy therefrom.

2. A light source which is flexible comprising:

a layer of polyester film having first and second sides, said first side being formed rough to provide a good bonding surface;

a plurality of electroluminescent phosphors held in a flexible layer of epoxy resin material, said layer of epoxy resin having first and second sides and having its second side bonded to the first side of said polyester film;

a first flexible transparent electrode means having one side secured to said first side of said layers of epoxy resin;

a second flexible electrode means secured to said second side of said layer of polyester film;

means coupled to said first and second flexible electrodes for connecting thereacross a source of voltage to pass an electrostatic field through said electroluminescent phosphors for causing radiation of an exciting light therefrom;

a flexible layer of color selected photoluminescent material having a first and second side with its second side bonded to the other side of said first flexible transparent electrode to receive and be excited by said exciting light, thereby in turn to radiate a fluorescent light having a frequency significant of said selected color, to be visible from the first side of said photoluminescent material.

References Cited in the file of this patent

UNITED STATES PATENTS

2,387,512	Hilberg	Oct. 23, 1945
2,733,367	Gillson	Jan. 31, 1956
2,774,004	Jaffe	Dec. 11 1956
2,863,711	Hurvitz	Dec. 9, 1958
2,921,218	Larach et al.	June 21, 1960
2,944,177	Piper	July 5, 1960

FOREIGN PATENTS

1,155,597	France	Dec. 2, 1957