US 20120186614A1

(19) **United States**

(12) **Patent Application Publication**

Hockaday et al.

(10) **Pub. No.: US 2012/0186614 A1**

(43) **Pub. Date: Jul. 26, 2012**

(54) **ADDITIVE ALERT SYSTEM**

(76) Inventors: **John David Hockaday**, Bartlett, TN (US); **Eldon Loyd Moss, JR.**, Atoka, TN (US); **Edwin Earl Duncan, III**, Bartlett, TN (US)

(21) Appl. No.: **13/329,277**

(22) Filed: **Dec. 17, 2011**

Related U.S. Application Data

(60) Provisional application No. 61/424,100, filed on Dec. 17, 2010.

Publication Classification

(51) **Int. Cl.**

A47L 15/46 (2006.01)

A47L 15/42 (2006.01)

(52) **U.S. Cl.** ..... **134/57 D**; 134/56 D

(57) **ABSTRACT**

An apparatus and system for detecting the delivery or nondelivery of a cleaning and sanitizing agent or chemical in automated dishwashers, warewashers, and laundry machines. A detector comprising one or more sensors or two or more electrical electrodes are positioned outside the ends of the delivery tube or tubes for the sanitizing agent or chemical. As the sanitizing agent or chemical liquid is released from the delivery tube or tubes, the liquid forms a stream of flow through the air. The flow passes within sensing range of the sensor or sensors, or encompasses the electrical electrodes thereby completing an electrical circuit. When the sensor detects the flow and the sensor is activated, or the circuit completes, a control unit prevents an alarm from sounding.

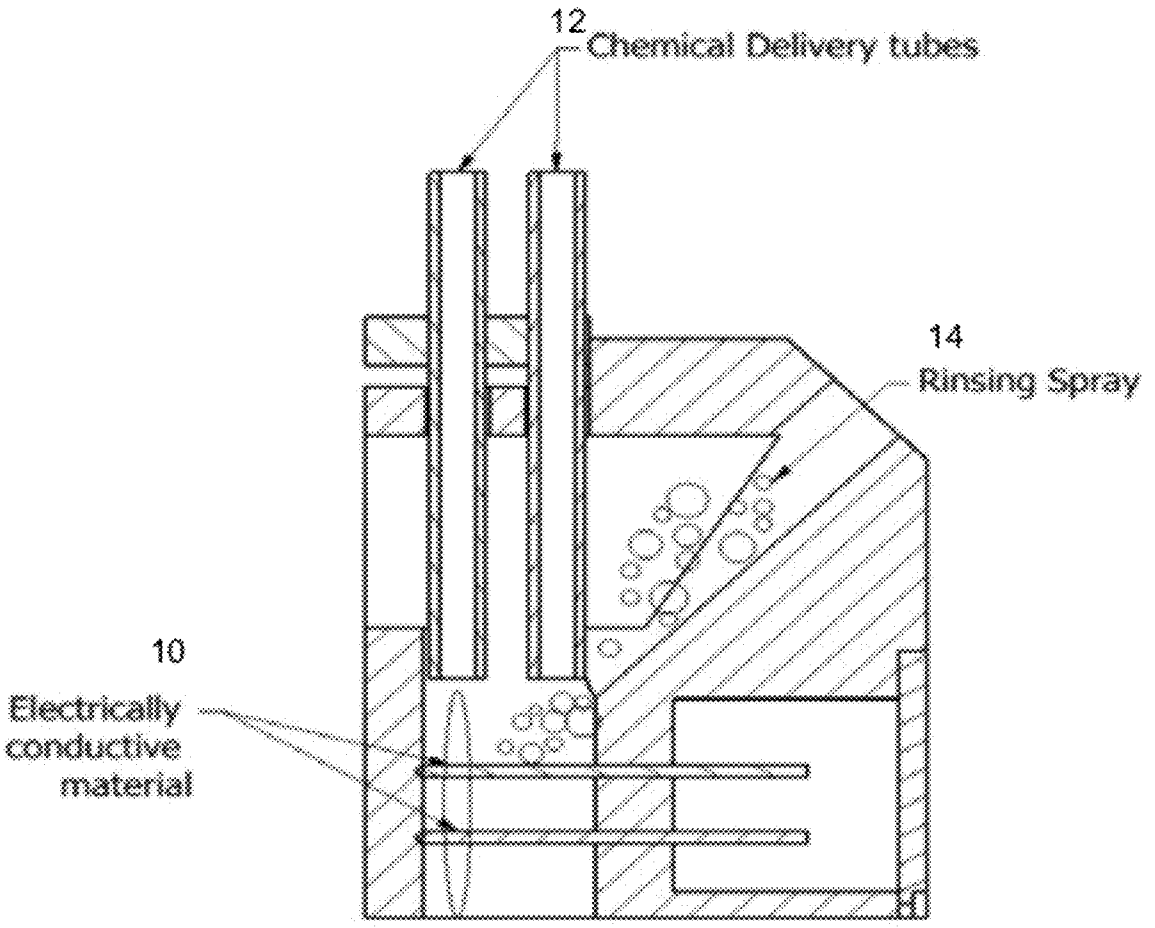

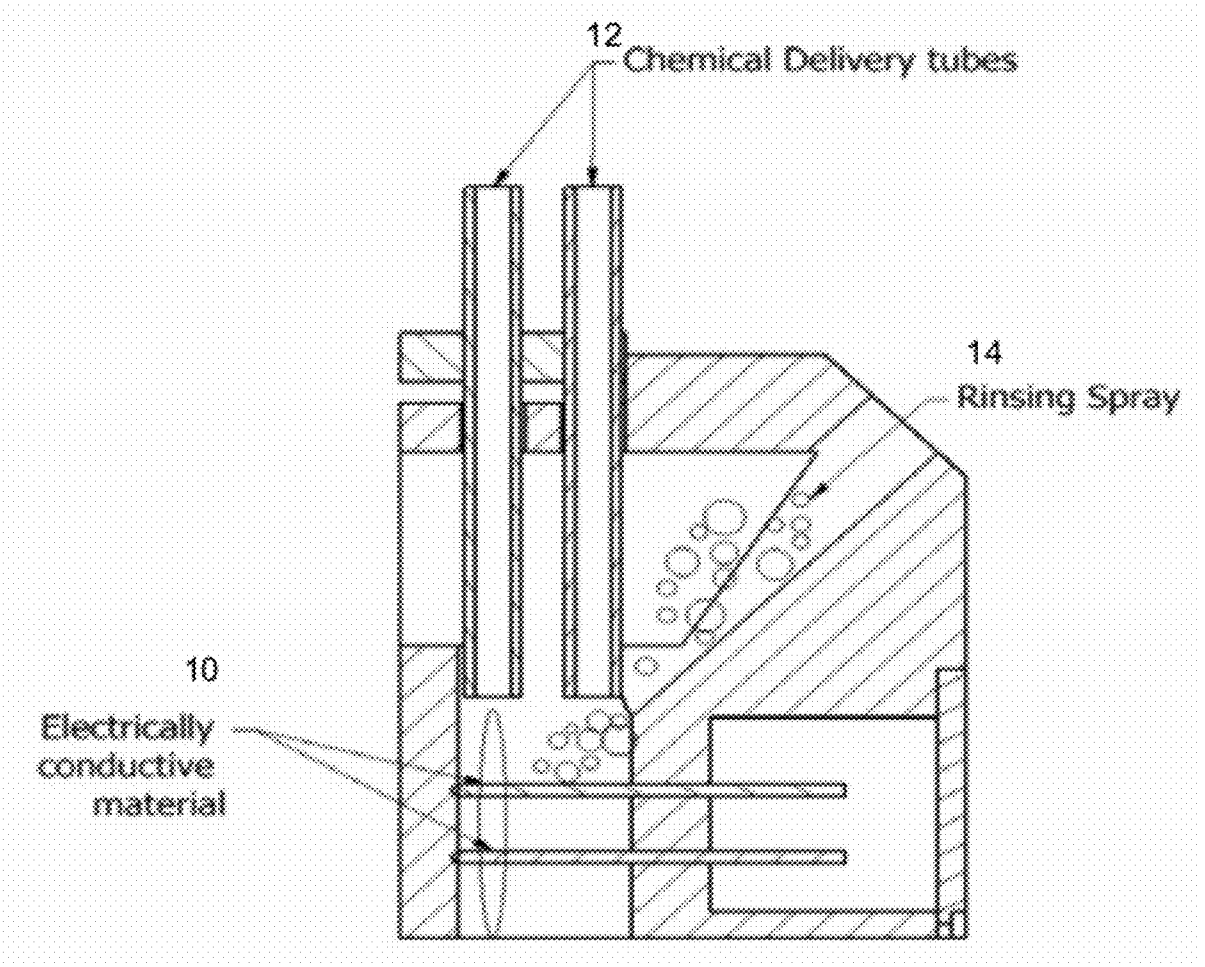
12
Chemical Delivery tubes
14
Rinsing Spray
10
Electrically
conductive
material

FIGURE 1

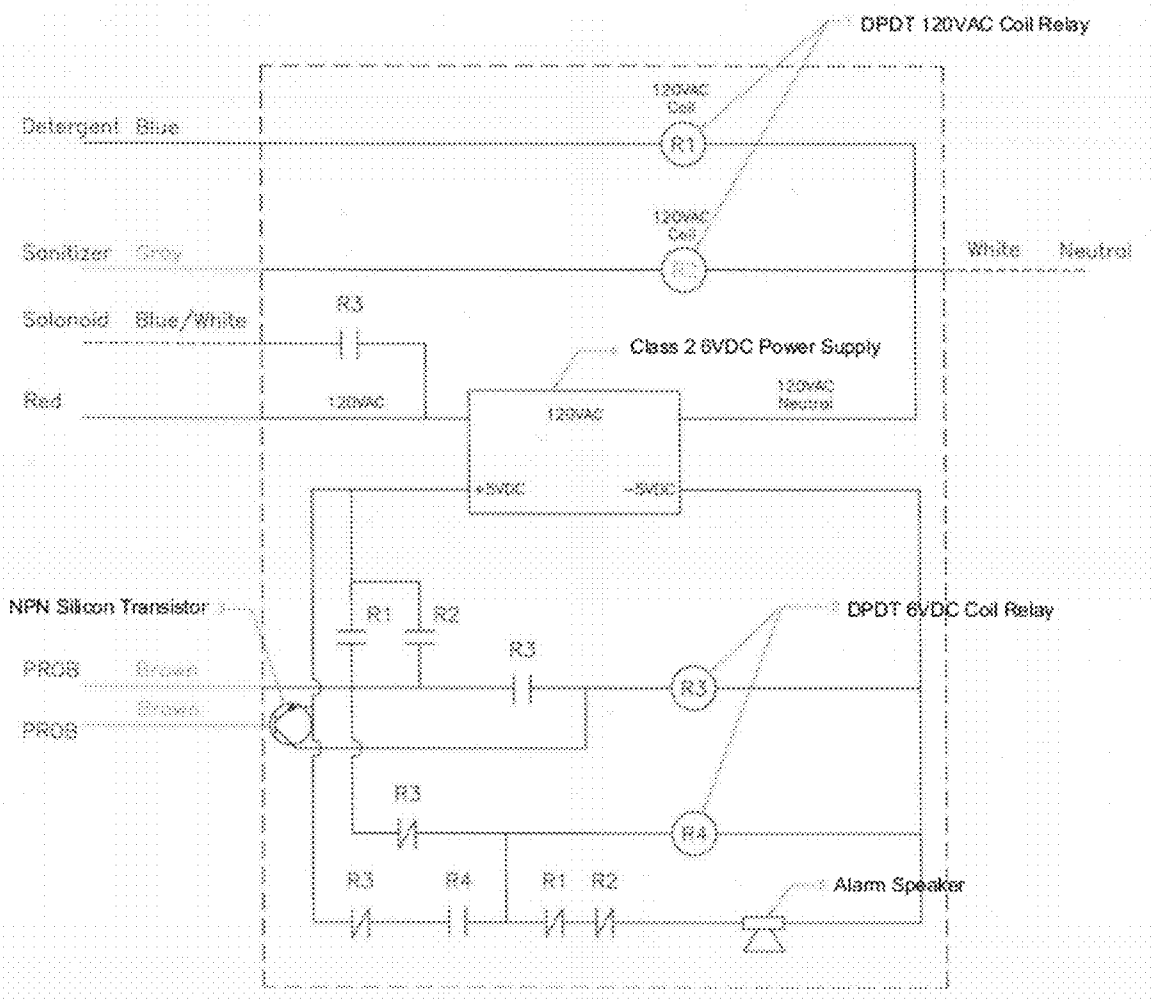
DPDT 120VAC Coil Relay
120VAC Coil
Detergent Blue
R1
120VAC Coil
Sanitizer Gray
White Neutral
Solenoid Blue/White
R3
Class 2 6VDC Power Supply
Red
120VAC
120VAC
120VAC Neutral
+6VDC
-6VDC
NPN Silicon Transistor
R1
R2
DPDT 6VDC Coil Relay
PROB Brown
R3
R3
PROB Brown
R3
R4
R3
R4
R1
R2
Alarm Speaker

FIGURE 2

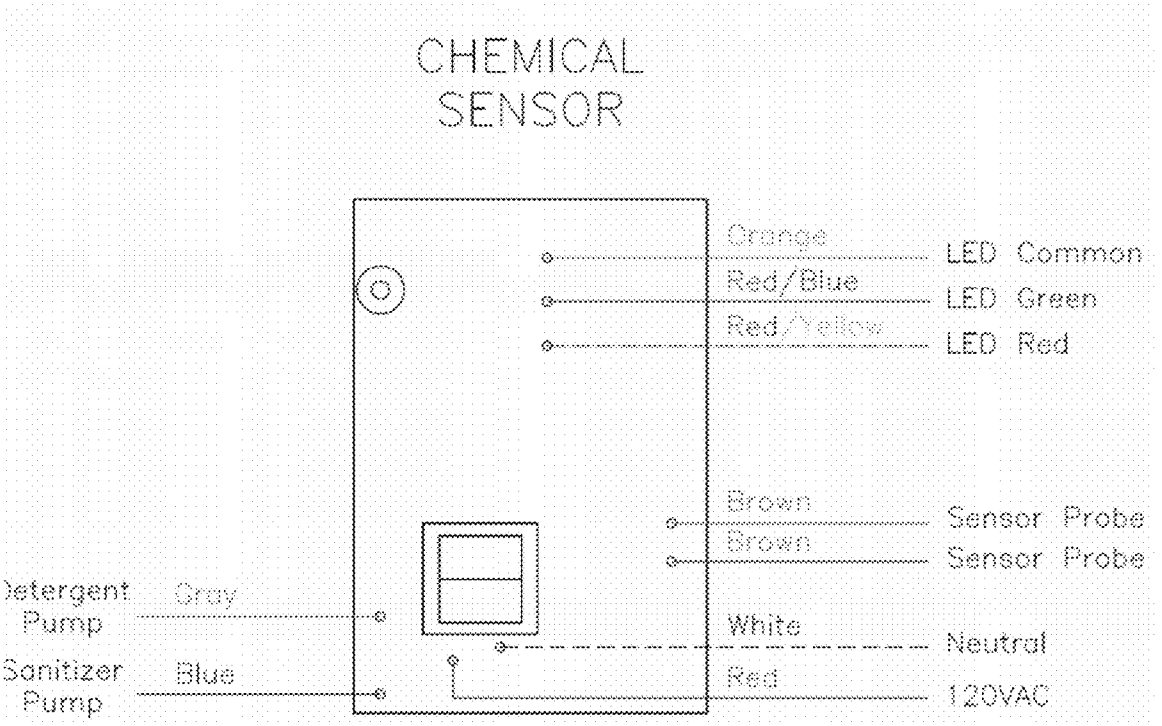
CHEMICAL
SENSOR
Orange
LED Common
Red/Blue
LED Green
Red/Yellow
LED Red
Brown
Sensor Probe
Brown
Sensor Probe
Detergent
Pump
Gray
White
Neutral
Sanitizer
Pump
Blue
Red
120VAC

FIGURE 3

ADDITIVE ALERT SYSTEM

[0001] This application claims benefit of and priority to U.S. Provisional Application No. 61/424,100, filed Dec. 17, 2010, by John David Hockaday, et al., and is entitled to that filing date for priority. The specification, figures and complete disclosure of U.S. Provisional Application No. 61/424,100 are incorporated herein by specific reference for all purposes.

FIELD OF INVENTION

[0002] This invention relates to an improved method and apparatus for detecting the delivery of a chemical sanitizing agent, or other liquid, to a dishwashing or warewashing machine.

BACKGROUND OF THE INVENTION

[0003] The use of automated commercial dishwashers and laundry machines in a variety of settings, such as restaurants, hotels, or nursing homes, among others, is widely known. Chemical sanitizers are often used with such machines, and a variety of systems for ensuring that sanitizer and cleaning agents are being supplied are known in the art. For example, Shih, U.S. Pat. No. 4,142,539, discloses a sanitizer alert system that senses first the absence and then the presence of a sanitizing agent in a delivery conduit. Robinson, U.S. Pat. No. 4,036,404, discloses a visual or audible indicator to indicate the absence of an additive in a supply line ordinarily added to the rinse or wash water of a commercial dishwashing machine. And Nishioka, U.S. Pat. No. 6,819,250, discloses an out-of-liquid photosensor that detects the presence or absence of a liquid flowing in the internal section of a light-transmissive tubular body. U.S. Pat. Nos. 4,036,404; 4,142,539; and 6,819,250 are incorporated herein in their entireties by specific reference for all purposes.

[0004] Prior art systems, however, are subject to a variety of problems. The concentrated cleaning and sanitizing agents and chemical can attack the functional components of the detection device, requiring expensive chemical resistant materials be used and frequent repairs. These systems detect the presence or absence of the cleaning and sanitizing agent or chemical in the delivery system, and thus cannot detect when a downstream mechanical problem prevents the actual delivery of the sanitizing agent. And gas emissions from the cleaning and sanitizing agent or chemical storage tank can cause false readings.

[0005] Accordingly, what is needed is a system for detecting the delivery or nondelivery of a cleaning and sanitizing agent or chemical in automated commercial dishwashers and laundry machines without the above problems.

SUMMARY OF INVENTION

[0006] In various embodiments, the present invention comprises an apparatus and system for detecting the delivery or nondelivery of a cleaning and sanitizing agent or chemical in automated dishwashers, warewashers, and laundry machines. In one embodiment, the present invention comprises a pair of electrical electrodes or an electrical sensor positioned outside the ends of the delivery tube or tubes for the sanitizing agent or chemical. As the sanitizing agent or chemical liquid is released from the delivery tube or tubes, the liquid forms a stream of flow through the air. Once the chemical or agent is released from the delivery tubes or system, the sanitizing agent or chemical liquid encompasses the pair of electrical sensors or electrodes positioned just beyond the opening of the delivery tubes.

[0007] The sensors or electrodes are comprised of an electrically conductive material. The liquid stream creates a path for an electrical circuit by touching both sensors or electrodes simultaneously. When the circuit completes, a control circuit prevents an alarm from sounding. Simple relay logic may be used to control the unit.

[0008] In one exemplary embodiment, the control circuit also causes a flow or spray of water or rinsate to be directed onto the electrical sensors or electrodes, thereby diluting or removing or rinsing, or a combination thereof, any remaining chemical or agent from the conducting surfaces of the sensors or electrodes. This eliminates or reduces the adverse impact the chemical or agent, or its residue, will have on the conducting surfaces and reduces the time required for the chemical additives to be mixed into the process solutions.

[0009] In one exemplary embodiment, the apparatus of the present invention is configured so that the chemical delivery tubes point downwards so that gravity causes, or assists, in the flow of the chemical or agent into the wash chamber, and over the sensors or electrodes. The electrodes may be positioned one directly above the other, or in a vertical alignment with a slight offset, although they may be positioned in other configurations. Where multiple delivery tubes are used, the electrodes may be configured to extend length-wise across the area where two or more tubes discharge. More than two electrodes also may be used. In other exemplary embodiments, others forms of sensors could be used to detect or track the falling chemical or agent, including but not limited to photosensors or proximity sensors.

[0010] In yet another embodiment, the signal created by the chemical or agent passing the sensors may be used as feedback to the delivery control system to control the dosage amount. In a further embodiment, an electronic control circuit is used with a feature to ensure and notify the user that the unit is operating properly. The circuit comprises a check to determine if the signal circuit has been broken. If the unit does not meet acceptable parameters, the unit will first attempt to wash the electrodes and self-clear the potential error. If the wash does not clear the error, the system will report a failure or system error to the user (such as by lighting a red LED on the control circuit box).

BRIEF DESCRIPTION OF THE DRAWINGS

[0011] FIG. **1** shows a view of a system in accordance with an exemplary embodiment of the present invention.

[0012] FIG. **2** shows a schematic diagram of an electrical sensor control component of the system of FIG. **1**.

[0013] FIG. **3** shows a schematic diagram of an electrical sensor control component in accordance with another exemplary embodiment of the present invention.

DETAILED DESCRIPTION OF EXEMPLARY EMBODIMENTS

[0014] In one exemplary embodiment, as shown in FIG. **1**, the present invention comprises a pair of electrical electrodes or an electrical sensor **10** positioned outside the ends of the delivery tube or tubes **12** for a sanitizing agent or chemical used in automated commercial dishwashers or laundry machines. As the sanitizing agent or chemical liquid is

released from the delivery tube or tubes **12**, the liquid forms a stream of flow through the air.

[0015] Once the chemical or agent is released from the delivery system, it is past a point of no return and gravity requires it to flow into the wash or rinse cabinet. As shown in FIG. **1**, once released, the flow of the sanitizing agent or chemical liquid encompasses a pair of electrical electrodes **10** positioned just beyond the opening of the delivery tubes **12**.

[0016] The electrodes **10** are comprised of an electrically conductive material. The liquid stream creates a path for an electrical circuit by touching both sensors or electrodes **10** simultaneously. When the circuit completes, a control circuit **20** (as shown in FIG. **2** or **3**) prevents an alarm from sounding. Alternatively, if an electrical sensor is used, the flow need not encompass the sensor, but merely needs to pass near in sensing proximity. Simple relay logic may be used to control the unit.

[0017] In one exemplary embodiment, the electrodes or sensors **10** are positioned to detect the chemical flow after leaving the delivery mechanisms (e.g., tubes), but directly before the chemical flow mixes with the washing solution or solutions. Alternatively, they can be positioned elsewhere in the flow stream.

[0018] In another exemplary embodiment, the control circuit **20** also causes a flow or spray of water or rinsate **14** to be directed onto the electrical sensors or electrodes **10**, thereby diluting or removing or rinsing, or a combination thereof, any remaining chemical or agent from the conducting surfaces of the sensors or electrodes. This eliminates or reduces the adverse impact the chemical or agent, or its residue, will have on the conducting surfaces and reduces the time required for the chemical additives to be mixed into the process solutions.

[0019] In yet another exemplary embodiment, the apparatus of the present invention is configured so that the chemical delivery tubes point downwards so that gravity causes, or assists, in the flow of the chemical or agent into the wash chamber, and over the sensors or electrodes. The electrodes may be positioned one directly above the other, or in a vertical alignment with a slight offset, although they may be positioned in other configurations. Where multiple delivery tubes are used, the electrodes may be configured to extend lengthwise across the area where two or more tubes discharge. More than two electrodes also may be used. In other exemplary embodiments, other forms of sensors could be used to detect or track the falling chemical or agent, including but not limited to photosensors or proximity sensors.

[0020] In yet another embodiment, the signal created by the chemical or agent passing the sensors may be used as feedback to the delivery control system to control the dosage amount.

[0021] In a further embodiment, as seen in FIG. **3**, an electronic control circuit is used with a feature to ensure and notify the user that the unit is operating properly. The circuit comprises a check to determine if the signal circuit has been broken. If the unit does not meet acceptable parameters, the unit will first attempt to wash the electrodes and self-clear the potential error. If the wash does not clear the error, the system will report a failure or system error to the user (such as by lighting a red LED on the control circuit box).

[0022] The typical operation for use of the device on a fill and dump style chemical sanitizing dishwasher is as follows. The operator starts the machine either by closing the door or pushing a start button. When the machine cycle starts and the detergent or sanitizer pumps are activated, power comes from the main machine power to the alert control circuit. Power applied to the peristaltic pumps closes the corresponding relays R**1** or R**2**. Power is also applied to relay R**4**, and R**4** forms a latching circuit. Power is also applied to one of the electrodes. When the chemical contacts the electrodes and completes the circuit, it activates relay R**3** and R**3** latches itself in and deactivates the alarm circuit by breaking the R**4** latch. R**3** also powers the water solenoid valve while R**3** is energized. The water solenoid valve controls the rinsing spray. The water valve shuts off when the peristaltic pumps are de-energized. If no chemical completes the circuit, then relay R**4** is activated and the alarm circuit is energized. With the alarm circuit energized the alarm will activate when the peristaltic pumps de-energize. The alarm circuit could be attached to both a signal light and audible alarm.

[0023] When a control as shown in FIG. **3** is used, a typical method of operation is as follows. The operator starts the machine either by closing the door or pushing a start button. The machine cycle starts and the machine controls operate a peristaltic pump to dispense detergent into the wash water. The alert system receives a signal that the detergent pump has been activated and therefore should verify the addition of detergent. At the end of the peristaltic pump cycle the alert system would indicate if no chemical has been added or that chemical was added as expected. If during the verification processes the detergent is not detected, a red light will flash to indicate a delivery failure. The flashing light continues until the verification process is initialized and completed successfully. A continuous green light would indicate the chemicals were added as expected.

[0024] If chemical was detected as expected, the control circuit will activate a valve to allow water to spray across the electrodes to rinse away and dilute any residual chemical to prevent corrosion and speed chemical mixing with the wash water, as described above.

[0025] After a short delay, the control circuit will check for a negative indication to ensure that all of the residual chemical has been removed and an open circuit has been reestablished. If the chemical has been removed and the open circuit established then the green light continues to be continuously light. If the circuit does not break or the sensor detects the presence of chemical then the control circuit will make up to two more attempts to rinse the chemicals away. If the presence of chemical is still present after the three attempts, the green light will begin flashing, indicating the need for service or repair.

[0026] The machine continues to wash until the end of its timed wash cycle. The machine then drains the wash water and fresh rinse water is added. During the addition of rinse water to the machine, the machine also adds sanitizers and rinse additives. During the addition of the sanitizer the alert system would receive a signal that the chemical pump for the sanitizer had been activated and it should verify the addition.

[0027] If during the verification process the sanitizer is not detected, a red light will be continuously lit until the verification process is initialized and completed successfully. If completed successfully the unit will perform the rinse cycle as describe above to remove chemical and prevent corrosion.

[0028] There is an optional audible alarm to accompany the flashing red or continuous red light. The audible alarm is continuous for the continuous red light or intermittent for the flashing red light.

[0029] If the system detects a failure and the operator is alerted, the operator typically needs to replace the chemical

supply and prime the supply lines. As the chemical pumps are primed the alert system continues to monitor for chemical delivery. Once delivery is detected on the alarms will be turned off.

[0030] Thus, it should be understood that the embodiments and examples described herein have been chosen and described in order to best illustrate the principles of the invention and its practical applications to thereby enable one of ordinary skill in the art to best utilize the invention in various embodiments and with various modifications as are suited for particular uses contemplated. Even though specific embodiments of this invention have been described, they are not to be taken as exhaustive. There are several variations that will be apparent to those skilled in the art.

What is claimed is:

1. An apparatus for detecting the delivery of a chemical sanitizing agent or other liquid in a dishwashing or warewashing machine, comprising:

one or more delivery tubes for discharging a flow of a sanitizing agent or other chemical or liquid from an open end of said delivery tube or tubes;

a detector positioned outside the open ends of said delivery tubes or tubes so as to detect the flow of said sanitizing agent or other chemical or liquid before mixing with any washing solution or solutions;

a control unit to determine whether or not the detector has detected said flow.

2. The apparatus of claim **1**, wherein the detector comprises one or more sensors positioned so that said flow is within the sensing range of said sensor or sensors.

3. The apparatus of claim **1**, wherein the detector comprises two or more electrodes positioned to be encompassed by the flow, wherein said electrodes are part of the same electric circuit, and the control unit detects when the electric circuit is completed by the sensors or electrodes being encompassed by said flow.

4. The apparatus of claim **3**, wherein the control unit provides an alert or signal when the electric circuit is not completed at a time a chemical sanitizing agent or other liquid should be discharged.

5. The apparatus of claim **3**, wherein the electrodes have a length sufficient to extend across the area where the delivery tube or tubes discharge.

6. The apparatus of claim **3**, wherein the electrodes are positioned in an alignment perpendicular to the flow.

7. The apparatus of claim **3**, wherein the electrodes are positioned in an alignment at an angle to the flow.

8. The apparatus of claim **1**, wherein the sensors or electrodes are positioned in an alignment parallel to the flow.

9. The apparatus of claim **7**, wherein the sensors or electrodes are offset from each other.

10. The apparatus of claim **1**, wherein the delivery tube or tubes point downwards so gravity causes or assists in the flow.

11. The apparatus of claim **3**, further comprising a separate water spray or flow directed onto the electrodes to clean the electrodes of any sanitizing agent or other chemical or liquid.

12. The apparatus of claim **3**, wherein the control unit is programmed to detect if the circuit is broken.

13. The apparatus of claim **12**, wherein if the control unit detects the circuit is broken, the control unit causes a separate water spray or flow to be directed onto the electrodes to clean the sensors or electrodes.

* * * * *