J. C. OSBORNE.

FOLDING TABLE.

APPLICATION FILED FEB. 8, 1912.

1,068,817.

Patented July 29, 1913.

2 SHEETS—SHEET 1.

FIG. 1.

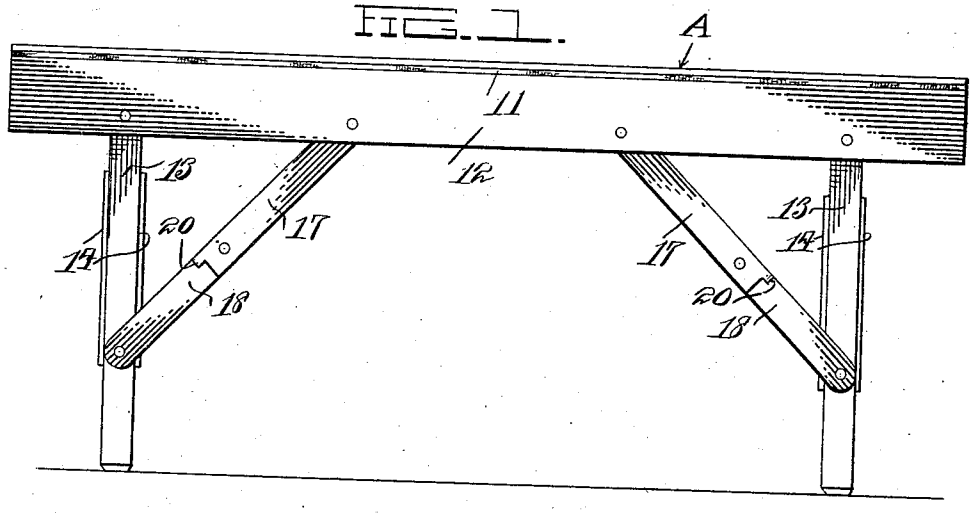

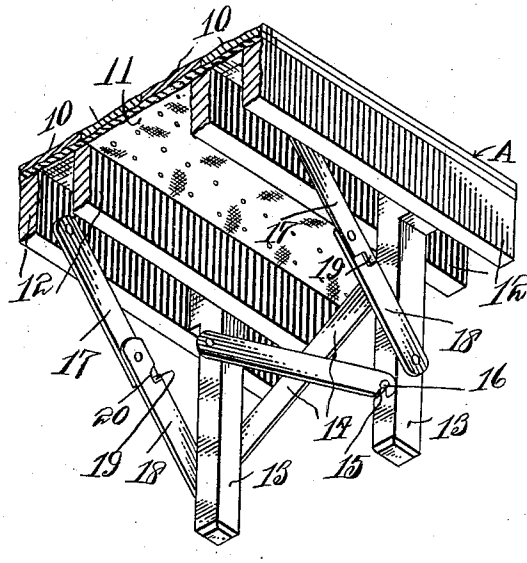

FIG. 7.

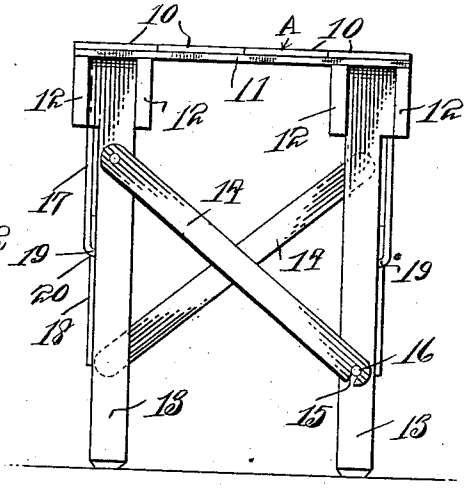

FIG. 8.

Witnesses

P. W. Taylor

Henry T. Bright

Inventor

J. C. Osborne.

By Pomeroy & Pomeroy

Attorneys

COLUMBIA PLANOGRAPH CO., WASHINGTON, D. C.

J. C. OSBORNE.

FOLDING TABLE.

APPLICATION FILED FEB. 8, 1912.

1,068,817.

Patented July 29, 1913.

2 SHEETS—SHEET 2.

FIG. 2.

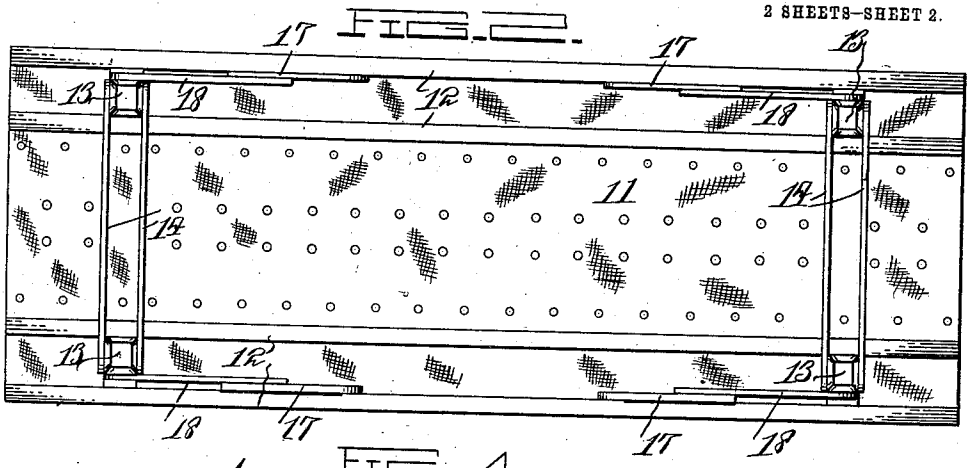

FIG. 4.

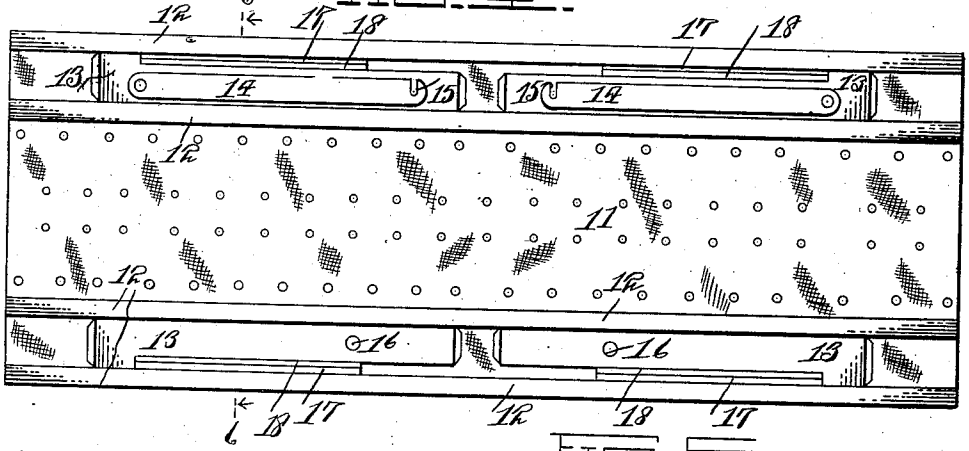

FIG. 5.

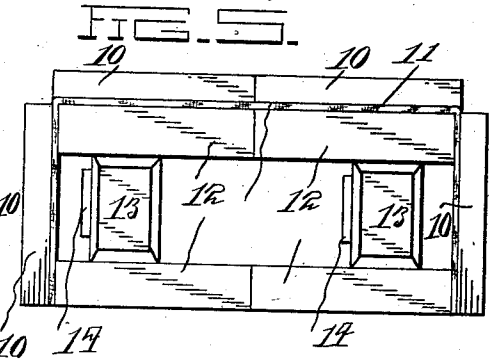

FIG. 6.

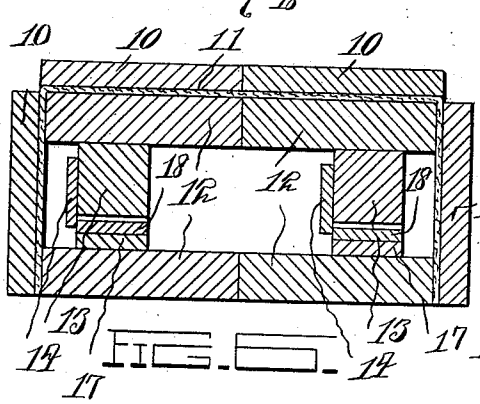

Inventor

J. C. Osborne.

Witnesses

P. H. Taylor

Henry T. Bright

By Chandler & Chandler

Attorneys

COLUMBIA PLANOGRAPH CO., WASHINGTON, D. C.

UNITED STATES PATENT OFFICE.

JONATHAN C. OSBORNE, OF SAFE HARBOR, PENNSYLVANIA.

FOLDING TABLE.

1,068,817. Specification of Letters Patent. Patented July 29, 1913.

Application filed February 8, 1912. Serial No. 676,214.

To all whom it may concern:

Be it known that I, JONATHAN C. OSBORNE, a citizen of the United States, residing at Safe Harbor, in the county of Lancaster, State of Pennsylvania, have invented certain new and useful Improvements in Folding Tables; and I do hereby declare the following to be a full, clear, and exact description of the invention, such as will enable others skilled in the art to which it appertains to make and use the same.

This invention relates to folding tables and particularly to that type used by paper hangers in pasting and cutting paper.

The object of the invention resides in the provision of a table of the character referred to which will be exceedingly light in weight, strong, and firmly braced when in use, and which can be folded into a compact and convenient form for transportation.

With the above and other objects in view, the invention consists in the details of construction and in the arrangement and combination of parts to be hereinafter more fully described and particularly pointed out in the appended claim.

In describing the invention in detail, reference will be had to the accompanying drawings, wherein like characters of reference denote corresponding parts in the several views, and in which—

Figure 1 is a side elevation of a table constructed in accordance with the invention and shown set up. Fig 2, a bottom view of what is shown in Fig. 1, Fig. 3, an end view of what is shown in Fig. 1, Fig. 4, a view similar to Fig. 2 showing the leg elements in folded position, Fig. 5, an end view of the table in a completely folded state, Fig. 6, a section on the line 6—6 of Fig. 4 with the parts of the table in a completely folded state, and Fig. 7, a detail perspective view of one end of the table showing the manner of bracing the leg disposed at the same end of the table.

Referring to the drawings the table is shown as comprising a top A formed of a plurality of strips 10 disposed side by side and suitably connected to a common flexible member 11. The outermost strips 10 each have depending therefrom and extending longitudinally therewith parallel strips 12 and between these latter are pivoted the legs 13 of the table, said legs being movable to positions at right angles to the strips 12 and contiguous with the latter. In order to brace the legs 13 disposed at the same end of the table, when in a position at right angles to the strips 12, there is pivoted on the outer and inner faces of said legs respectively cross braces 14 provided at their free ends with notches 15 adapted to engage with pins 16 mounted on corresponding faces of the opposite leg whereby the legs at the same end of the table are held against movement toward or away from each other. In order to secure the legs 13 against movement from a position at right angles to the strips 12 to a position contiguous with said strips there is provided a folding brace consisting of pivotally connected links 17 and 18 having their free or outer ends in turn pivotally connected to a leg 13 and to an adjacent strip 12 respectively, the point of connection with the strip 12 being disposed inwardly of said leg. The link 17 is provided with an inwardly directed finger 19 adapted to engage in a recess 20 to limit the pivotal movement of said links at their juncture to an extent that will dispose said links in substantially longitudinal alinement and the leg in a position at right angles to the strips 12. These links however may be pivoted at their juncture so as to swing the leg inwardly of the table to a position between the adjacent strips 12 and contiguous with the latter. When it is desired to fold the leg to a position contiguous with the strips 12 and between the latter it will of course be obvious that it is first necessary to disengage the cross braces 14 and position said braces contiguous with the leg 13 to which they are pivotally connected. When the legs 13 are all folded, in the manner referred to, between the strip 12 and contiguous with said strip the outermost strips 10 are folded inwardly so as to dispose the free edges of the strips 12 in substantially abutting relation. When the parts of the table are in the last named position it may be easily tied with rope or other suitable material and is then ready for transportation.

What is claimed is:

In a folding table, the combination of a plurality of flexibly connected strips arranged side by side and constituting the top of the table, a pair of spaced members secured to each of the outermost strips and extending longitudinal thereof, the strips and the members being of the same width, said outermost strips being foldable toward each other, a pair of legs pivoted between

each pair of members adjacent the ends of the latter respectively and movable to a position at right angles from said members to a position between same and contiguous therewith, the sides of the legs adjacent the outer member cut away, folding braces connecting said legs with an adjacent member for securing said legs in a position at right angles to the members, the braces adapted to fold in said cut-away portions, and a detachable cross brace between the legs and corresponding ends of each of the members for holding said legs against movement toward and away from each other.

In testimony whereof, I affix my signature, in presence of two witnesses.

JONATHAN C. OSBORNE.

Witnesses:

BENJ. B. BEACH,

JOHN B. WALLER.

Copies of this patent may be obtained for five cents each, by addressing the "Commissioner of Patents, Washington, D. C."