June 6, 1967 Y. ISK 3,323,521

RESPIRATOR

Filed July 5, 1963 2 Sheets-Sheet 1

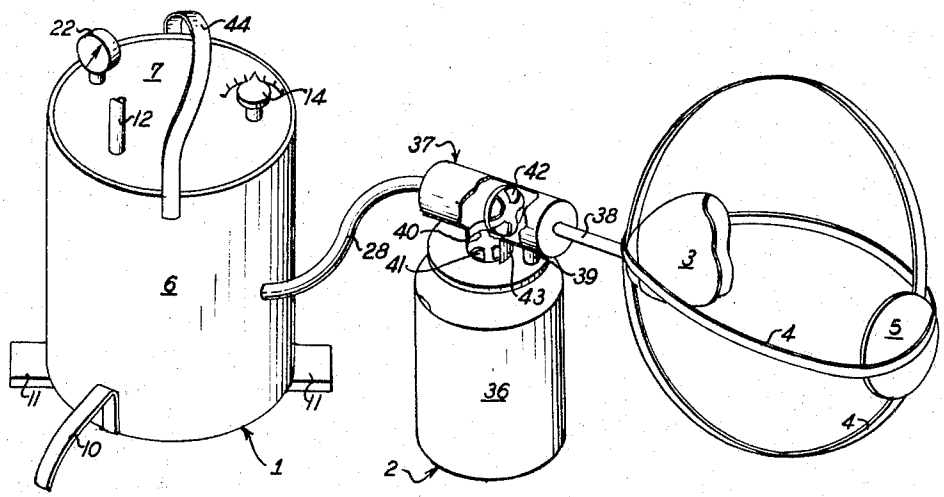

Fig. 1

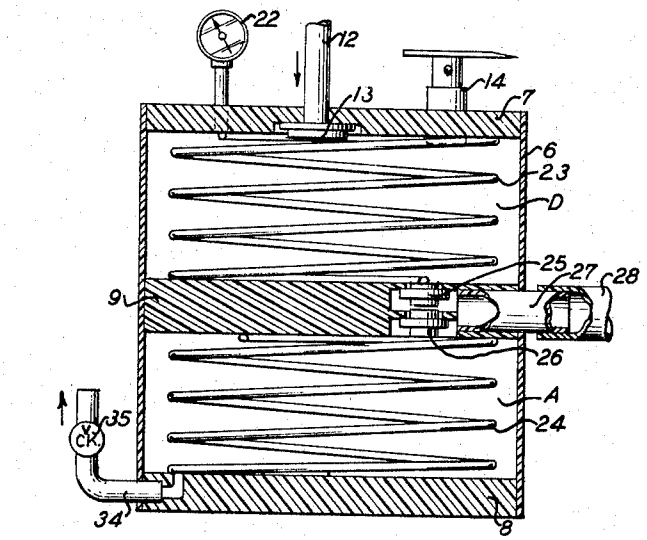

Fig. 2

INVENTOR

YEHUDA ISK

BY Burgess Dinklage & Sprung ATTORNEYS

June 6, 1967 Y. ISK 3,323,521

RESPIRATOR

Filed July 5, 1963 2 Sheets-Sheet 2

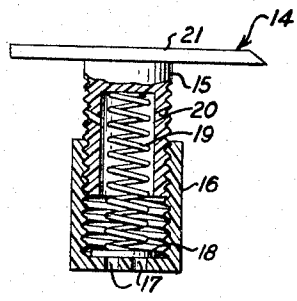

Fig 4

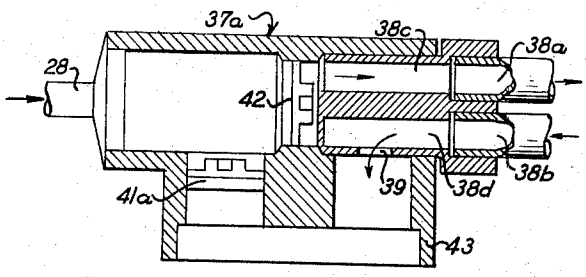

Fig-5

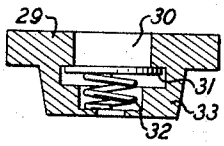

Fig-3

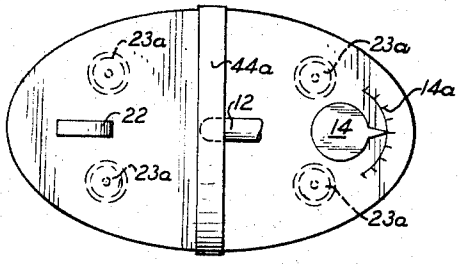

Fig-7

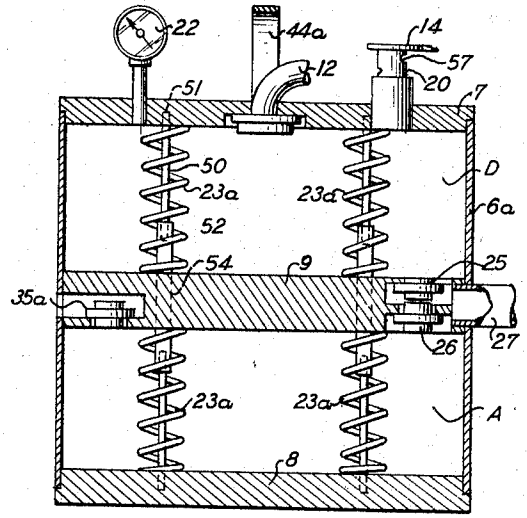

Fig-6

INVENTOR

YEHUDA ISK

BY Burgess Dinklage & Sprung
ATTORNEYS

United States Patent Office 3,323,521 Patented June 6, 1967

3,323,521

RESPIRATOR

Yehuda Isk, 41 Shikun Esrahi, Hadera, Israel

Filed July 5, 1963, Ser. No. 293,123
Claims priority, application Israel, Oct. 31, 1962, 18,156
16 Claims. (Cl. 128—145.6)

This invention has the object to provide respirators working by aspiration, or rhythmically alternating aspiration and delivery of air or oxygen, as a substitute for the mouth-to-mouth breathing method serving for restoring interrupted natural respiration, e.g. in cases of drowning, electric shock or the like.

The mouth-to-mouth breathing method consists in principle in that by the alternating action of delivering air (exhaled by the life saver) into the mouth of the patient and the aspiration of air from the latter, the chest of the patient is rhythmically expanded and contracted and his natural respiration is thereby induced to start again. This method has natural shortcomings, e.g. in the breathing capacity of the life saver, in the difficulty of establishing tight mouth-to-mouth connection between him and the patient, and in the impossibility of clearing the respiratory ducts of the patient when these have become clogged with matter thrown up from his stomach, especially if he has eaten a short time before the accident, as the aspiration created by the inhaling stroke of the life saver is not sufficient to remove such matter.

The invention provides a respirator comprising in combination: a face connection as means adapted to be tightly applied to the face of the patient for the introduction of air into his respiratory tracts and the aspiration of air from the latter; an air pump connected to said means and adapted, by alternating delivery and aspirating strokes, to set up in said means in alternation a state of atmospheric or elevated pressure and a state of reduced pressure; and a separator in the connecting conduit between the pump and said means for collecting any solid or liquid matter extracted from the patient during the aspiration stroke of the pump.

Preferably, the means for introducing air into the respiratory tract and withdrawing it from the latter is a mask tightly fitting over the mouth and nose of the patient. It may be secured to a strap designed to be strapped around the head of the patient. Further, the respirator preferably includes a regulator on the pump for varying the air delivery pressure in said means from atmospheric pressure to a predetermined elevated pressure.

The separator may comprise a flow element in the form of a hollow lid having a check valve controlled channel allowing the air to flow, during the delivery stroke, through the lid directly to the mouth of the patient without passing through the separator element or receptacle, and passages ahead and below the check valve for forcing the air to flow through the receptacle during the aspiration stroke.

The pump is preferably designed in the manner of a bellows and comprises an upright enclosure of a resilient material with a substantially rigid lid, bottom and partition dividing the enclosure into a delivery chamber and an aspiration chamber. Both these chambers can be connected through check valves with connection between the pump and separator, and a check valve controlled air feed connection and a regulator can be connected to the delivery chamber, and a check valve controlled air outlet can be connected to the aspiration chamber.

In a preferred embodiment, the pump comprises a delivery air chamber and an aspirated air chamber, and these chambers are disposed one atop the other. The assembly of chambers is compressible upon application of a collapsing force, and means are provided for, on

the one hand, resisting the collapsing force, and on the other hand, urging the chambers to the extended position, whereby the desired pumping action can be obtained. The chambers can be separated by a partition and a highly preferred embodiment of the invention involves the provision in this intermediate partition of check valves for the pumping operation. Thus, the partition can include a check valve for receiving delivery air from the delivery chamber and discharging this air to a conduit section for conveying the air to the separator, and can further include a check valve for receiving aspirated air and delivery such air to the aspirated air chamber. These check valves can be mounted in the partition so that the outlet of the former is the inlet of the latter and a single conduit section can be used for receiving delivery air from the delivery air check valve, and for conveying aspirated air to the aspirated air chack valve. Further, the pump includes an exhaust valve for exhaustion of aspirated air from the aspirated air chamber, and this exhaustion valve can be a check valve mounted in the intermediate partition. If desired, the air inlet valve to the delivery air chamber could also be mounted in the intermediate partittion. The mounting of various valves in the intermediate partition provides the advantage of facilitating construction of the respirator, since the moving parts can be located together in a single element.

In a preferred embodiment of the invention, the means for resisting a collapsing force applied to the pump comprises a plurality of springs in each the delivery air chamber and the aspirated air chamber and the springs in each chamber are disposed in an array such that the collapsing force is uniformly resisted. A pump handle is provided for manually applying a collapsing force, and the pump is, in horizontal cross-section, substantially elliptical. The pump handle is disposed substantially over the minor axis of the ellipse. This construction facilitates realization of uniform compression and expansion across the horizontal cross-section of the pump and provided more uniform pump action.

The invention is illustrated, by way of example, in the accompanying drawings, in which:

FIG. 1 is a diagrammatical elevation, partly in section, of a complete respirator;

FIG. 2 is an axial section of the pump;

FIG. 3 is an axial section of one of the check valves disposed in the pump;

FIG. 4 is an axial section of the delivery regulator of the pump;

FIG. 5 is an axial section of the separator lid according to a second embodiment of the invention;

FIG. 6 is an elevation corresponding with FIG. 2 and showing a modified construction according to the invention; and

FIG. 7 is a plan view of the pump shown in FIG. 6.

The respirator illustrated in FIGS. 1–4 comprises a pump generally referred to by the numeral **1**, a separator generally referred to by the numeral **2**, and a mask **3** secured to a strap **4** which can be fastened around the head of the patient. Preferably, a semi-rigid flap **5**, e.g. of leather, is provided at the rear end of the strap in order to hold the latter more securely against the back of the head.

The pump is a bellows-like structure having an enclosure **6** of resilient material, e.g. rubber, elastomer, rubberized fabric or the like, and secured to the enclosure a lid **7**, bottom **8** and partition **9**, all of them preferably of a substantially rigid material, such as synthetic plastics, metal, wood or the like. The partition is located substantially in the middle of the height of the enclosure and divides the latter into an upper delivery chamber D and a lower aspiration chamber A. The enclosure shown by way of example has an upright cylindrical shape and

stands on feet 10. At its bottom it is provided with foot rests 11 in diametrically opposite positions for a purpose to be explained below.

The lid 7 includes a supply conduit 12 for air, or oxygen, or a mixture of oxygen and CO_2 (all which are called herein "air" for short), controlled by a check valve 13, and with a regulator 14. The latter makes it possible to regulate the delivery of air pressurized by the operation of the pump in the delivery chamber D, from a delivery under a predetermined elevated pressure down to atmospheric pressure, according to the requirements of each particular case. The regulator comprises a sleeve 15 (FIG. 4) screwed into a tapped socket 16 which is secured to the lid and has in its bottom a number of perforations 17 controlled by a disc valve 18. The disc valve is held in the closed position by the action of a compression spring 19 disposed within the sleeve 15 and thus constitutes a check valve. The sleeve has ports 20 and is made integrally with an actuating knob or wheel 21. A pointer may be provided on the knob 21 so that the desired position of adjustment of the regulator can be read on a scale or graduation provided on the lid 7. The lid may also be fitted with a pressure gauge 22.

The partition 9 is under the opposing pressures of compression springs 23, 24, respectively disposed in the delivery and aspiration chambers. The partition 9 has an aperture controlled by two check valves 25, 26, and communicating by a lateral duct 27 with a connection for a conduit 28 leading to the separator 2. The two check valves 25 and 26 are substantially identical and one of them has been shown in detail in FIG. 3. They comprise each a seat plate 29 secured in any suitable manner to the partition 9 and having a passage 30 controlled by a disc valve 31 which is pressed against the seat place by a compression spring 32 bearing at its opposite end against the perforated bottom of a cap 33 secured to the seat 29 and enclosing the disc 31.

To the bottom 8 an outlet 34 controlled by a check valve 35 is connected.

The separator 2 comprises a receptacle of any suitable material closed by a hollow lid 37 having connection for the conduit 28 leading to the pump, and for a duct 38 leading to the mask 3. The lid 37 also has a passage 39 opening into the receptacle 36, a passage 40 controlled by a check valve 41 and equally opening into the receptacle 36, and a check valve 42 between the two passages 39 and 40. For holding the check valve 41, a downward extending boss 43 is provided at the underside of the lid.

The lid 7 of the pump may be provided with a handle 44 which serves in general for carrying it but may have an additional function described below.

The operation of the respirator described hereinbefore is as follows:

Assuming the regulator to be adjusted to full delivery, each delivery stroke of the pump, brought about by foot pressure exerted on the lid 7, causes the following operations: pressing down the lid and compression of spring 23, whereby the volume of the delivery chamber D is diminished; pressing down the partition 9 and compression of spring 24, whereby the volume of the aspiration chamber A is diminished; delivery of air through the check valve 25, which opens under the pressure prevailing in chamber D, through conduit 28, check valve 42 and conduit 38 into the mask 3, whereby the natural inhalation of the patient is simulated and his chest is expanded; and expulsion of air from chamber A through the check valve 35. During this delivery stroke the check valve 26 does not open since the air or oxygen pressurized in the delivery chamber finds an unimpeded outlet through the duct 27 and conduit 28.

When now the pressure on the lid is relieved, both chambers D and A expand by the action of springs 23, 24. The check valve 25 closes and air flows into chamber D through conduit 12. At the same time the check valve 35 closes and a state of reduced pressure is set up in chamber A, which aspirates air from the mouth of the patient, whereby natural exhalation is simulated and the chest is contracted.

The stream of "exhaled" air cannot pass the check valve 42 of the separator and is thus deflected through the passage 39 into the receptacle 36 which it leaves again through check valve 41. Any solid or liquid matter that clogs the respiratory tracts of the patient is pumped out by the aspirating stroke of the pump and drops into the separator receptacle 36.

In many cases it is desired to deliver but little pressurized air, or none at all, into the mouth of the patient, e.g. with children who are apt to suffer dangerous injuries to the respiratory tracts and lungs by such pressurizing. If no pressurizing but only aspirating action is intended, the regulator is so adjusted, by screwing the sleeve 15 (FIG. 4) upwards, that the pressure of spring 19 on the disc 18 becomes very weak or ceases altogether. In that case, the air compressed in the delivery chamber D in the course of the delivery stroke escapes through the regulator and merely a state of substantially atmospheric pressure will be re-established at the mask during the delivery stroke. By adjusting the regulator to appropriate intermediate positions, the delivery of small amounts of mildly pressurized air to the patient can be achieved.

Instead of actuating the pump by pedal action, which as a rule is not very strong, the operator may hold the pump down by putting his feet on the foot rests 11 and move the lid up and down by hand, seizing for this purpose the handle 44 with one or both hands.

In a preferred embodiment of the invention, the separator is arranged in the conduit means interconnecting the pump and the face mask or face connection in the manner that the portion of the conduit intermediate the pump and the separator is a conduit having a single passageway for carrying both delivery air and aspirated air, while the conduit means interconnecting the separator and the face mask comprises two passageways, one for delivery of air from the separator to the face mask, and the other for conveying aspirated air from the face mask to the separator. Such an embodiment of the invention is indicated in FIG. 5.

The separator is connected to the mask by two ducts 38*a*, 38*b* of which the former is destined for the delivery of pressurized air to the mask, and the latter for the exhaustion of "exhaled" air. This arrangement eliminates any dangers that in a case of incomplete removal of "exhaled air" in the course of a single stroke of the pump a portion of such air, left behind in the single duct 38 of the first embodiment, is not delivered back into the respiratory tract of the patient in the course of the next delivery stroke of the pump.

The separator lid 37*a* of FIG. 5 is analogous in every respect to the lid 37 of FIG. 1, with the following exception: the chamber of the lid between the check valve 42 and the ducts leading to and from the mask is subdivided into two channels 38*c* and 38*d*. The channel 38*c* opens at one end in face of the check valve 42 and communicates at the other end with the duct 38*a*. The channel 38*d* communicates at one end with the duct 38*b* and is closed at its opposite end but has a downwards facing passage 39*a*, which corresponds to the passage 39 of the lid of FIG. 1.

By the delivery stroke of the pump, fresh air is delivered through the check valve 42, channel 38*c* and duct 38*a* to the mask while the check valve 41 remains closed. By the aspiration stroke, while the check valve 42 remains closed, the exhaled air passed through duct 38*b* and channel 38*d*, and hence through passage 39, the separator and onwards back to the pump as in the embodiment described above.

In the embodiment shown in FIG. 6 and FIG. 7, the pump is formed with accordion like sidewalls 6*a*, and the intermediate partition is provided not only with the

check valves **25** and **26**, but is further provided with a check valve **35***a* which serves as the outlet valve for the aspirated air chamber for exhaustion thereof, in the manner that the check valve **35** of the embodiment shown in FIG. 2 serves to facilitate exhaustion of aspirated air. The check valve **35***a* can be of the construction of check valves **25** and **26**. Further, in this embodiment, the means provided for resisting compression and for urging the chambers to the extended condition comprise a plurality of springs **23***a* disposed in an array in each chamber so that collapsing forces are resisted uniformly and expansion forces are applied uniformly. The springs **23***a* are coil springs disposed co-axially about the pins **50**, which have one end thereof fixedly mounted in the end partition, and have the other end thereof slideably received in the hollow fitting **15** for which extends through the intermediate partition **9**. As can be best seen in FIG. 7, the pump, in horizontal cross-section is substantially elliptical and the pump handle **44***a* provided for manual operation of the pump is disposed over about the minor axis of the ellipse.

The respirator can include an indicating means for indicating pressure over a selected value in the air delivery chamber. Desirably, the indicating means can indicate operation of the regulator valve **14** in correspondence to over pressure in the delivery air chamber. When the respirator is operated manually, the indicator means will serve to inform the operator that there is overpressure in the air delivery chamber. The magnitude of the collapsible force applied to impart pressure to the air in the air delivery chamber can then be reduced, and in this way the development of overpressure of magnitude such that a dangerous condition would exist, can be obviated. Thus, in the embodiment shown in FIG. 2, during the existence of the overpressure in the air delivery chamber D, both the regulator valve **14** and the check valve **25** are open, and the air pressure delivered to the patient depends on the pressure in the air delivery chamber, and if the pressure in the air delivery chamber is substantially higher than the value for which the regulating valve is set, this high pressure value will be the effective value for operation of the device. The regulating valve **14** becomes operative upon the occurrence of overpressure, but does not prevent the existence of pressure in excess of the value for which the regulator valve is set. While the regulating valve is of a type such that the existence of a pressure in excess of a selected value in the air delivery chamber D could be utilized, construction is substantially simplified by utilizing a regulator valve of the type shown particularly in combination with an indicating means for indicating overpressure in the chamber.

A further advantage of an indicating means for indicating overpressure is that in the event of an obstruction which interferes with normal operation of the device, the indicating means will reveal this, as, for example, by continuous operation thereof.

In the embodiment illustrated in the drawings, the regulator valve **14** opens for issuance of air from the air delivery chamber D to reveal overpressure in the chamber, and an indicator means can be provided which includes a sounding device arranged for operation in response to air passed through the regulator valve upon the operation thereof. Thus, regulator valve **14** includes a whistle **57**, which is arranged for operation in response to air passing through the regulator valve.

The capacity of the air delivery chamber can be about 65 cc. and the capacity of the aspiration chamber can be the same. When the pump is elliptical in horizontal cross-section, the minor axis can be about 15 cm., the major axis 25 cm., and the height 20 cm. Four springs **23***a* can be included in each chamber.

The embodiment of FIG. 5, in addition to the advantages described above, provides the advantage that any solids contained in air exhaled and passed through line **38***b*, are isolated from the air delivery path so that they will not be returned to the patient.

While the invention has been described with respect to particular embodiments thereof, it should be understood that these embodiments are merely representative of the invention and do not serve to define the limits thereof.

In addition to manual operation, the device may of course also be operated by any conventional motor device, as for example, an electric motor operating the bellows through a crank arm and connecting rod, and any other mechanical means for converting the rotary motion of the motor to reciprocating motion may be used.

What is claimed is:

1. In a respirator comprising in combination a respirator face connection, a respirator air pump for providing respirator delivery and aspirating pressure, conduit means communicating the pump with the face connection for delivery and aspiration of air from the face connection, the improvement which comprises a separator operatively interposed in said conduit means for trapping foreign matter in aspirated air, said conduit means includes a conduit section interconnecting the respirator pump and the separator, which section includes a single fluid passageway, and a section interconnecting said separator and said face connection, said separator comprising a separator element and a separator flow fitting, said separator flow fitting receiving delivery air from said first-mentioned conduit section and directly transferring said air to said second-mentioned conduit section by-passing said separator element, said separator flow fitting further including means for receiving aspirated air from said second-mentioned conduit section and routing the aspirated air to the separator element, and means communicating the separator element with the said first-mentioned conduit section for routing air from the separator element to the said first-mentioned conduit section for return of aspirated air to the pump.

2. Respirator according to claim **1**, the second-mentioned conduit section having a single fluid flow passageway therein.

3. Respirator according to claim **1**, said second mentioned conduit section including two flow passageways, one of said flow passageways being for conveying delivery air from the separator to the face connection and the other of said flow passageways being for conveying of aspirated air from the face connection to the separator.

4. Respirator according to claim **1**, said separator flow fitting comprising a first check valve for flow through the fitting directly from the first-mentioned conduit section to the second-mentioned conduit section while preventing the opposite flow, and a second check valve permitting flow from the separator element to the first mentioned conduit section while preventing flow from the first-mentioned conduit section to the separator element.

5. A respirator comprising in combination a respirator face connection, a respirator air pump for providing respirator delivery and aspirating pressure, and conduit means communicating the pump with the face connection, said respirator air pump comprising a delivery air chamber and an aspirated air chamber, said chambers being compressible by application of a force tending to axially collapse the chambers and the pump including means for urging the chambers to their original form following release of the collapsing force, a partition dividing the air delivery chamber from the air aspirating chamber, said partition containing a check valve communicated with the air delivery chamber and arranged for opening upon the compressing of the said chambers, and check valve outlet means for communicating the check valve with said conduit means when the check valve is in the open condition, said partition further including a second check valve, said second check valve being communicated with the aspirating chamber and being arranged for opening upon release of said col-

lapsing force and for closing during application of the collapsing force, and inlet means for the second check valve for communicating the inlet side thereof with said conduit means, a third check valve communicated with said aspirating air chamber for exhaustion of the aspirated air chamber upon compression of the aspirated air chamber, a separator operatively interposed in said conduit means for trapping foreign matter in aspirated air, said conduit means including a conduit section interconnecting the respirator pump and the separator, which section includes a single fluid passageway, and a section interconnecting said separator and said face connection, said separator comprising a separator element and a separator flow fitting, said separator flow fitting receiving delivery air from said first-mentioned conduit section and directly transferring said air to said second-mentioned conduit section by-passing said separator element, said separator flow fitting further including means for receiving aspirated air from said second-mentioned conduit section and routing the aspirated air to the separator element, and means communicating the separator element with the said first-mentioned conduit section for routing air from the separator element to the said first-mentioned conduit section for return of aspirated air to the pump.

6. Respirator according to claim **5**, the outlet means for the first-mentioned check valve and the inlet means for the second-mentioned check valve being a single conduit section communicating with the said conduit means and with the outlet side of the first-mentioned check valve and the inlet side of the second-mentioned check valve.

7. Respirator according to claim **5**, the first-mentioned check valve having a fixed opening pressure setting, and a regulating valve operatively mounted on the air delivery chamber for selectively controlling the air delivery pressure.

8. Respirator according to claim **5**, said partition further including said third check valve.

9. Respirator according to claim **6**, said third check valve being mounted in said partition.

10. Respirator according to claim **7**, said partition including said third check valve.

11. Respirator according to claim **5**, the said pump being substantially elliptical in horizontal cross-section, and including in each chamber a plurality of springs resisting compression and for urging the chambers from a collapsed condition to an extended condition.

12. Respirator according to claim **11**, and including a pump handle for manual application of a collapsing force to the pump, said pump handle being disposed substantially along the minor axis of the ellipse.

13. Respirator according to claim **7**, and including indicator means for indicating operation of the regulator valve in correspondence to overpressure in the delivery air chamber.

14. Respirator according to claim **7**, the regulator valve opening for issuance of air from the air delivery chamber to relieve overpressure in the delivery air chamber, said indicator means comprising a sounding device arranged for operation in response to air passed through the regulator valve upon operation thereof.

15. A respirator comprising in combination a respirator face connection, a respirator air pump for providing respirator delivery and aspirating pressure, and conduit means communicating the pump with the face connection, said respirator air pump comprising a delivery air chamber and an aspirated air chamber, said chambers being compressible by application of a force tending to axially collapse the chambers and the pump including means for urging the chambers to their original form following release of the collapsing force, a partition dividing the air delivery chamber from the air aspirating chamber, said partition containing a check valve communicated with the air delivery chamber and arranged for opening upon the compressing of the said chambers, and check valve outlet means for communicating the check valve with said conduit means when the check valve is in the open condition, said partition further including a second check valve, said second check valve being communicated with the aspirating chamber and being arranged for opening upon release of said collapsing force and for closing during application of the collapsing force, and inlet means for the second check valve for communicating the inlet side thereof with said conduit means, the outlet means for the connecting the separator with the face connection, the separator flow fitting routing delivery air directly to the section communicating with the said conduit means and with the outlet side of the first-mentioned check valve and the inlet side of the second-mentioned check valve, and including a separator said separator being operatively interposed in said conduit means, said single conduit section communicating the pump with the separator.

16. Respirator according to claim **15**, said separator including a flow fitting and a separator element, and said conduit means including a second conduit section interconnecting the separator with the face connection, the separator flow fitting routing delivery air directly to the second conduit section by-passing the separator element, and delivering aspirated air to the separator element, said second conduit section including a first flow passageway for conveying delivery air from the separator to the face connection, and a second flow passageway for delivering aspirated air from the face connection to the flow separator.

References Cited

UNITED STATES PATENTS

2,383,181	8/1945	Ensline et al.	128—29
2,737,177	3/1956	Anklin	128—29
3,105,488	10/1963	Richards	128—29
3,106,204	10/1963	Paramelle	128—29
3,115,138	12/1963	McElvenny et al.	128—278
3,185,147	5/1965	Champagne	128—29

FOREIGN PATENTS

1,237,217	6/1960	France.

RICHARD A. GAUDET, *Primary Examiner.*

CHARLES F. ROSENBAUM, *Examiner.*