J. C. KLEIN.

MANUFACTURE OF LAPS FOR SHOVELS.

No. 171,142. Patented Dec. 14, 1875.

Fig. 1.

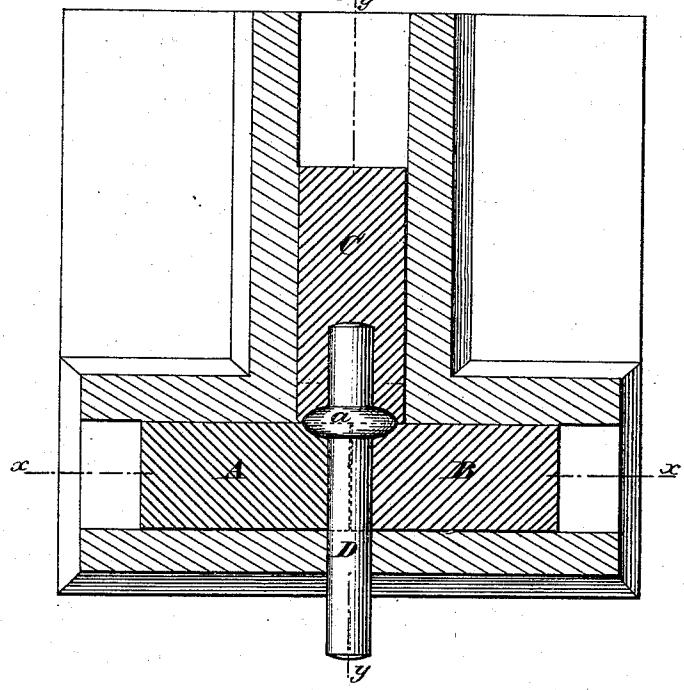

Fig. 3.

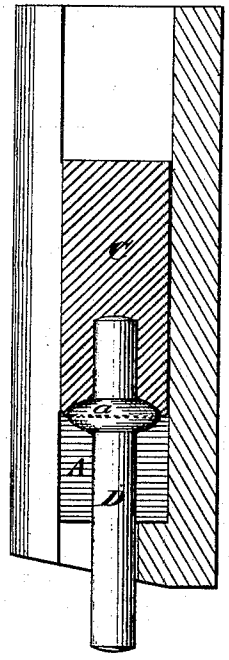

Fig. 2.

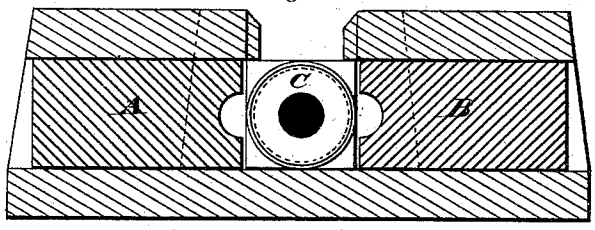

Fig. 6.

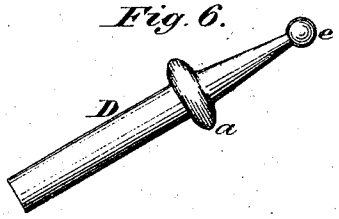

Fig. 4.

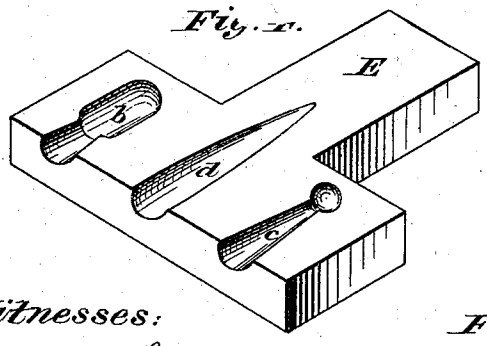

Fig. 5.

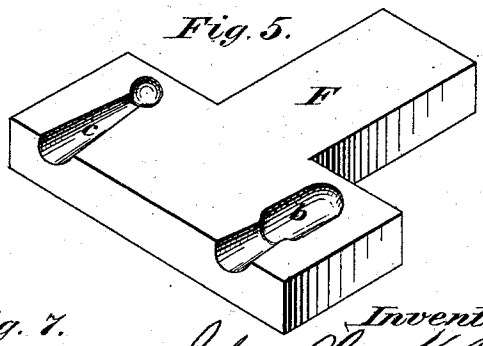

Witnesses:

Jos. T. K. Plant

Fig. 7.

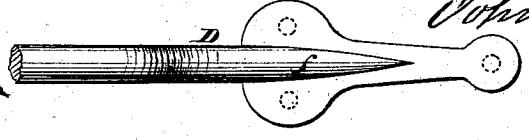

Inventor:

John Chr. Klein

N. PETERS, PHOTO-LITHOGRAPHER, WASHINGTON, D. C.

UNITED STATES PATENT OFFICE.

JOHN CHRISTOPH KLEIN, OF PITTSBURG, PENNSYLVANIA.

IMPROVEMENT IN THE MANUFACTURE OF LAPS FOR SHOVELS.

Specification forming part of Letters Patent No. **171,142**, dated December 14, 1875; application filed June 17, 1875.

CASE C.

To all whom it may concern:

Be it known that I, JOHN CHRISTOPH KLEIN, of Pittsburg, in the county of Allegheny and State of Pennsylvania, have invented certain new and useful Improvements in the Manufacture of Laps for Fire and other Shovels; and I do hereby declare that the following is a full, clear, and exact description thereof, which will enable others skilled in the art to which it pertains to make and use the same, reference being had to the accompanying drawing, and to the letters of reference marked thereon, which form a part of this specification.

In the manufacture of laps for fire and other shovels it is desirable that the stem be firmly united with the flat part, by which the handle is riveted to the shovel part, and strengthened in its connection by a ridge. Heretofore blanks for laps have been worked into shape by hammering or swaging, and attempts have been made to form the blanks between dies in a press, or between rolls, to give them the approximate form previous to their being finished under the hammer.

My invention consists in first forming a collar on the blank, by dies operated by cams and levers, then placing the blank between dies to taper the end and form a small bulb thereon, and finally to flatten the collar and bulb, and form the ridge, by which the shovel is riveted or secured to the handle.

In the accompanying drawing, Figure 1 is a sectional plan view of the ways and dies by which the collar is formed; Fig. 2, a cross-section on line *x x*, with the dies drawn apart; Fig. 3, a longitudinal section on line *y y*. Fig. 4 is the bottom finishing-die, and Fig. 5 the top finishing-die; Fig. 6, the blank, with collar and bulb; Fig. 7, the finished lap for shovels, &c.

In order that the method herein described may be fully understood, I will describe its various steps.

I first take a round piece of iron and heat it to the required degree, to enable it to be easily worked. This blank is placed between the dies A, B, and C, which are operated by suitable levers and cams, actuated in the usual way, from the side and end, and form the collar *a* on the blank D. The dies move backward and forward in suitable guides or ways in the usual well-known manner. The recess in the die C, which receives the end of the blank D, serves as a gage to govern the length of the end. The blank is then reheated and placed between the lower and upper dies E and F, which may be applied to a drop-hammer or oscillating rolls. It is first introduced into the recess or concavity *b*, to receive the taper; then into the recess or concavity *c*, and receives the form shown in Fig. 6, having the collar *a*, tapering end, and bulb *e;* and finally into the recess or concavity *d*, in which latter it receives on one side the strengthening-ridge *f*, Fig. 7, and on the other the flattened and drawn-out shape, by the flat part of the die F. The bulb *e* forms the outer flat part for a rivet, and the collar *a* the space for the other two rivets, and also the connecting and strengthening ridge *f*, for the shovel part and handle.

After these successive steps the blank has received the form shown in Fig. 7, and is ready to be drilled for the rivet-holes, and to be attached to fire and other similar shovels.

The present method of hammering or swaging out the laps for shovels is a slow and tedious operation, and requires skilled workmen, and the dies and method heretofore used for partly performing the operation between rolls or other mechanical devices have been defective, and the work could not be done in as neat and smooth a manner; it furthermore required more time, and the cost of the product was much greater than by the method herein described.

I claim as my invention and desire to secure by Letters Patent—

1. The herein-described improvement in the art of forming the laps of fire and other shovels, viz., first forming the collar on the bar; second, tapering the end and forming the bulb, and, finally, flattening and drawing out the end between dies, substantially as shown and specified.

2. The dies E F, with concavities *b c d* for forming the taper, bulb, ridge, and flattened end, substantially as shown and described.

In testimony that I claim the foregoing as my own, I hereby affix my signature in presence of two witnesses.

JOHN CHR. KLEIN.

Witnesses:

JOS. T. K. PLANT,

WM. G. NOLEN, Jr.