United States Patent [19]

Ramsay et al.

[11] **3,808,389**

[45] **Apr. 30, 1974**

[54] **KEY FOR ELECTRIC CONTACT KEYBOARD**

[75] Inventors: **Richard Ramsay**, Babylon; **Joseph P. Lanfear**, Jackson Heights; **Michael Bach**, Long Island, all of N.Y.

[73] Assignee: **Three Dimensional Circuits, Inc.**, Plainview, N.J.

[22] Filed: **Jan. 26, 1973**

[21] Appl. No.: **326,625**

[52] **U.S. Cl.** ..... **200/159 B**, 200/168 G

[51] **Int. Cl.** **H01h 3/12**

[58] **Field of Search** ..... 200/159 R, 159 B, 159 A, 200/166 PC, 166 BC, 168 G, 5 A; 340/365 A, 365 R

[56] **References Cited**

UNITED STATES PATENTS

3,641,286	2/1972	Berezowski	200/159 R X
3,506,795	4/1970	Schmidt	200/159 R X
3,048,673	8/1962	Kirk	200/159 B X

FOREIGN PATENTS OR APPLICATIONS

1,056,410	1/1967	Great Britain	200/159 B

Primary Examiner—Robert K. Schaefer
Assistant Examiner—William J. Smith
Attorney, Agent, or Firm—Burgess, Dinklage & Sprung

[57] **ABSTRACT**

A key for use in an electric contact keyboard for a mini-computer comprising a downwardly open shell whose top is the key face, the bottom periphery of the shell being fused with an integral resilient seal and return which is accordion-pleated in cross-section. A shank projects centrally from the underside of the shell and is provided adjacent its lower end with a neck which seats inside a corresponding aperture in the keyboard. The bottom of the shank is bifurcated and beveled to facilitate assembly. The shank also carries a contact member having a plurality of generally vertical legs terminating in generally horizontal feet which, when the key is depressed, wipe over contact points provided on the keyboard which carries a printed circuit.

3 Claims, 3 Drawing Figures

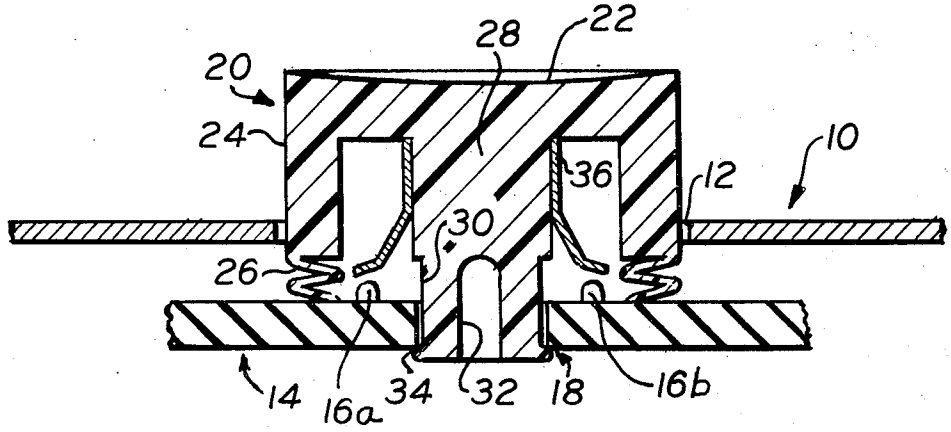

FIG. 1.

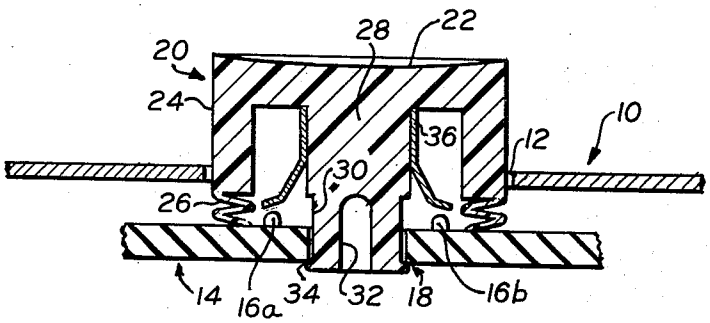

FIG. 2.

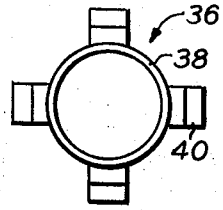

FIG. 3.

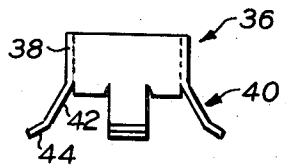

KEY FOR ELECTRIC CONTACT KEYBOARD

The present invention relates to a novel key for use in an electric contact keyboard such as a calculator or computer.

Small calculators generally comprise a housing provided with openings through which keys project. With the housing removed there is exposed the underlying structure which is the keyboard assembly. The keyboard may be made of plastic, fiberboard or the like and has printed thereon electric circuitry terminating in various contact points adjacent to the individual key assemblies. The individual key assemblies are attached by various means to this keyboard assembly. The keys are secured to the keyboard in a fashion which permits limited displacement of the keys relative to the plane of the board so that metallic members carried by the keys can make contact with the contact members and complete circuits as required. Means, such as leaf and compression springs, are usually required to urge the keys into non-contact position.

The foregoing structures take considerable space which is not always available with miniaturized machines, so frequently certain safeguards are omitted such as devices to shield the keyboard contact points from contaminants which would interfere with completion of a circuit. Othertimes the manner of assembly does not permit simple servicing or replacement of individual keys rather than the whole keyboard. Oftentimes, construction and assembly of the keys are complicated.

It is accordingly an object of the present invention to provide keys which can be manufactured and assembled inexpensively, joined easily to keyboards in a manner which permits easy repair and replacement, which make sure contact with the contact points on the keyboard and which are protected from malfunction due to contaminants and residues.

These objects and advantages are realized in accordance with the present invention pursuant to which there is provided a key for use in an electric contact keyboard comprising a downwardly open shell whose top constitutes the key face, a shank integral with said shell and projecting downwardly from said shell, the lower end of said shank being bifurcated and being provided with a neck, an annular contact member having a body portion surrounding said shank and a lower contact portion, and a resilient seal conforming to the periphery of the opening of said shell, whereby said key can be inserted into an aperture in a circuit member by flexing the bifurcation of said shank until said circuit member aperture is positioned about said shank neck with said seal being compressed between said shell and said circuit member thereby to maintain said key in raised non-contacting position, depressing of said key against the urging of said seal effecting contact between said contact member and said circuit member.

In accordance with a preferred aspect of the invention the resilient seal in cross-section is accordion pleated and is integral with the shell of the key. Desirably the lowermost end of the shank of the key is beveled so as to facilitate its insertion through the aperture in the circuit member. By flexing the bifurcations of the shank and displacing them toward one another the key can be removed from its aperture.

The lower contact portion of each contact member may comprise a plurality of leg members each including a generally downwardly projecting leg ending in a generally horizontally projecting foot, depressing of said key causing said foot initially to make contact with said circuit member and then to slide over said circuit member wiping off contaminants to ensure secure contact.

The key shell and shank are preferably formed of relatively stiff plastic, such as acrylonitrile-butadiene-styrene rubber, polystyrene, polypropylene, or the like. Preferably they are formed by injection molding. The resilient seal can be a separate soft rubbery material separately molded but preferably it is integral with the shell either being molded simultaneously therewith or, preferably, being formed by taking a pre-formed shell with shank attached, arranging the shell in a mold and supplying plastic of suitable character to fuse with the shell and form the integral seal.

The neck of the shank in cross-section will of course conform to the aperture in the keyboard and may be round. Advantageously it will be out of round and asymmetrical, e.g. D-shaped, which will ensure the proper orientation of the key to the board since the face of the Key will bear some letter, number of other indicia. Orientation can also be established by the shaping of the key shell and the corresponding opening in the housing.

The contact member can be fabricated of metal or it can be stamped out of sheet metal and then bent by suitable means. A suitable base material is a beryllium copper alloy of spring temper.

The invention will be further described with reference to the accompanying drawing, wherein:

FIG. 1 is a vertical section through a key in accordance with the invention and a portion of the keyboard and housing with which it cooperates;

FIG. 2 is a top plan view of the contact member of FIG. 1, and

FIG. 3 is a lateral elevation of the contact member of FIG. 2.

Referring now more particularly to the drawing, in FIG. 1 there is shown a portion of a mini-calculator comprising a housing **10** provided with openings **12**, only one of which is here shown. Beneath the housing **10** is a keyboard **14** carrying printed electric circuitry (not shown) terminating at various contact points **16** *a*, *b*, etc., adjacent an aperture **18** in the keyboard, the aperture **18** being aligned with an opening **12**. A key **20** is provided for each aperture.

The key **20** comprises a face **22** which can bear a letter, numeral or other indicia (not shown) surrounded by an integral shell or skirt **24** projecting downwardly therefrom. Also integral with shell **24** about its bottom is an accordion pleated resilient member **26** which rests on the top of keyboard **14** so as to form a seal therewith; the resilient seal **26** in assembled condition is flexed so as to exert an upward force on the key so that the seal is maintained whether the key is inactive or depressed.

Also projecting downwardly from the face of the key centrally thereof is a shank **28**. The upper portion of the shank is larger in cross-section than the aperture **18** and the lowermost portion of the shank is also larger in cross-section, but in between the shank is smaller in cross-section so as to form a neck **30** which sits inside aperture **18**, the key being capable of upward and downward movement within the aperture to the extent established by the length of neck **30**.

The lower end of the shank is provided with a cut-out **32** so that the shank end is bifurcated; the ends can be flexed toward one another because of the cut-out **32.** Advantageously the lower end of the shank is beveled as at **34.** Thus, the key can be joined to the keyboard from above by pressing the shank **28** into the keyboard aperture **18,** the bevel **34** contacting the aperture. Downward pressure causes the bifurcated portions of the shank to be deflected towards one another until the bevel advances fully through the aperture **18** at which point the aperture **18** surrounds the neck **30,** as shown. The key cannot be withdrawn readily from the aperture because there is no corresponding bevel around the neck **30.** To remove the key in servicing, the lower ends of the bifurcation must be compressed toward one another by a tool until their temporary cross-section is smaller than the aperture **18,** whereby the key can then be pulled upwardly.

Around the shank **28** is a metallic contact member **36** either force fit onto the shank or molded thereabout. As shown in FIGS. **2** and **3,** the member **36** comprises a shank-encircling body **38** and, in this case, four contact portions **40.** Each portion **40** comprises a leg **42** extending generally downwardly and ending in a foot **44** extending generally horizontally.

The resilient urging of seal **26** keeps feet **44** some distance above contact points **16** *a, b,* etc., although the feet and points are in alignment by the proper orientation of key and keyboard and/or housing. When the key is depressed against the urging of seal **26** the feet **44** first contact receptive points **16** and then deflect horizontally, wiping over the points to ensure secure contact therewith by virtue of the configuration of the legs and feet. Contact of two feet **44** with two points closes a circuit, in known manner.

The key itself may be round, square, elliptical or the like, as may be the shank although the shank is preferably D-shaped at its lower end. The housing can be eliminated and the printed keyboard can also function as the housing. The print of its circuit may be partially on the underface to protect it. The entire circuitry can even be on the underside of the keyboard with suitable reversal of the location of the contact member, etc.

The novel keys have a minimum number of parts and can be assembled and disassembled simply, functioning reliably for long periods of time. The key face may have indicia molded therein or they may later be applied as by adhesive, in known manner.

It will be appreciated that the instant specification and examples are set forth by way of illustration and not limitation, and that various modifications and changes may be made without departing from the spirit and scope of the present invention.

What is claimed is:

1. A key for use in an electric contact keyboard comprising a downwardly open stiff plastic shell whose top constitutes the key face, a shank integral with said shell and projecting downwardly from said shell beyond said shell, the lower end of said shank being bifurcated and beveled and being provided with a neck, an annular contact member having a body snugly surrounding said shank and a plurality of leg members each integral with said body and including a generally downwardly projecting leg ending in a generally horizontally projecting foot, and a resilient seal integral with said shell about its opening and accordion pleated in cross-section, whereby said key can be inserted into an aperture in a circuit member by flexing the bifurcation of said shank until said circuit member aperture is positioned about said shank neck with said seal being compressed between said shell and said circuit member thereby to maintain said key in raised non-contacting position, depressing of said key against the urging of said seal causing said feet of said contact member initially to make contact with said circuit member and then to slide over said circuit member to ensure secure contact.

2. In combination, a key as defined in claim **1** and a keyboard carrying a printed circuit constituting the circuit member, said keyboard being provided with an aperture through which said key shank extends.

3. In combination, a plurality of keys as defined in claim **1** and a keyboard carrying a printed circuit and a plurality of contact points constituting the circuit member in alignment with said contact points of said keyboard.

* * * * *