July 28, 1931. O. W. FOSS 1,816,321

COLLAPSIBLE PADDED BOX

Filed May 9, 1929 2 Sheets-Sheet 1

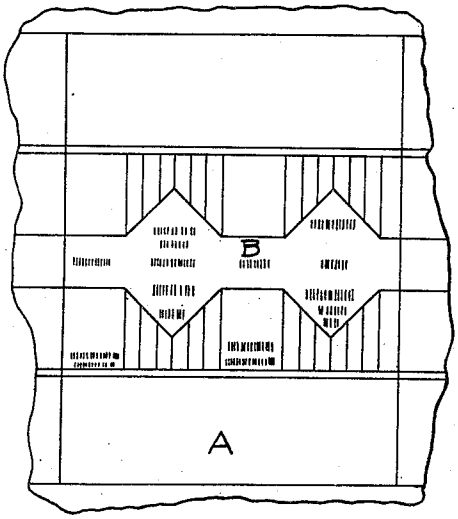

Fig. 1.

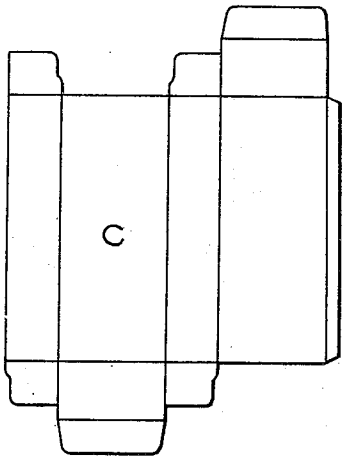

Fig. 2.

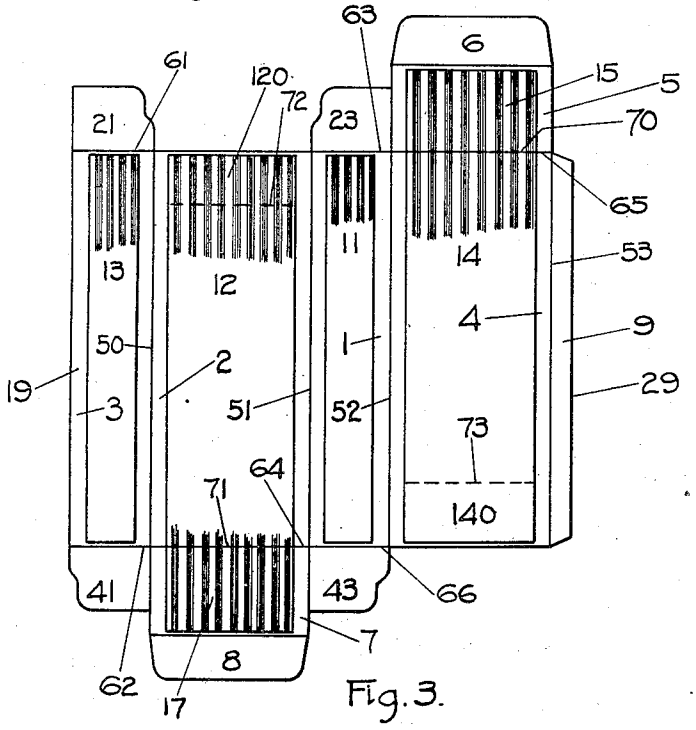

Fig. 3.

INVENTOR
Orlando W. Foss
BY
Gardner D. Pearson
ATTORNEY

July 28, 1931. O. W. FOSS 1,816,321

COLLAPSIBLE PADDED BOX

Filed May 9, 1929 2 Sheets-Sheet 2

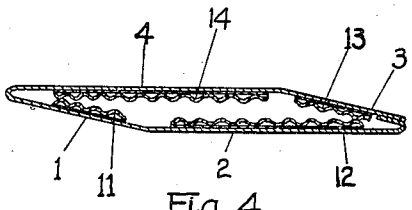

Fig. 4.

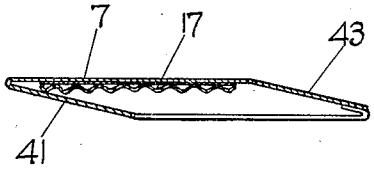

Fig. 5.

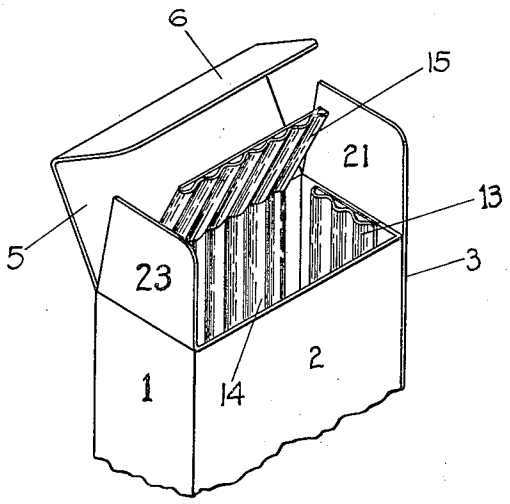

Fig. 6

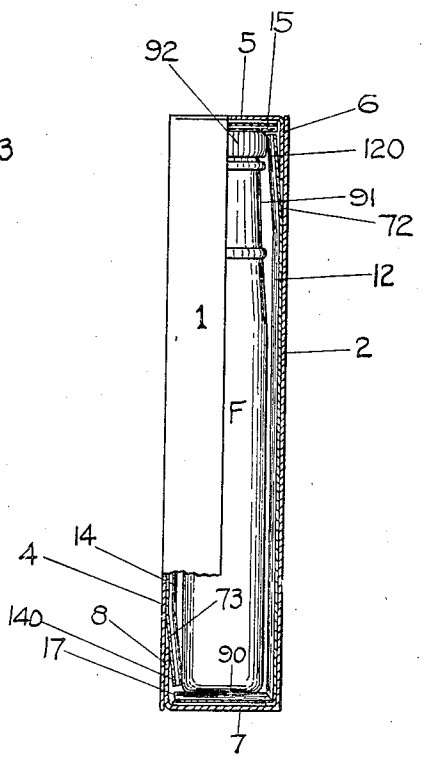

Fig. 7.

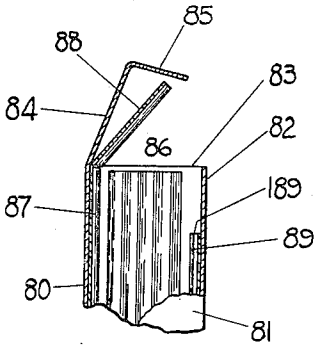

Fig. 8.

Orlando W. Foss INVENTOR

BY

Gardner D. Pearson ATTORNEY

Patented July 28, 1931 1,816,321

UNITED STATES PATENT OFFICE

ORLANDO W. FOSS, OF MELROSE, MASSACHUSETTS

COLLAPSIBLE PADDED BOX

Application filed May 9, 1929. Serial No. 361,795.

This invention relates to collapsible boxes or cartons particularly for use with bottles, other glass containers and other frangible articles.

In order to economize space when shipping and storing the empty boxes, it is desirable that they should be collapsible so that a larger number can be contained in a given space than if they always maintained their final form.

To reduce the cost of manufacture and to increase the speed, it is desirable that such boxes should be formed of light bendable cardboard of such character that its outer face can be printed with the desired ornamentation, lettering and advertising which is to show on the outside of the box when with its contents, it is exhibited as in a store.

It is also highly desirable that the four sides as well as the top and bottom of a bottle or other container or article which is to be transported in the box should be protected.

It is also desirable that there should be no disfiguring marks such as staples or outside overlapping parts to show on the outside of the box when the package is on display. It is also desirable that the outside rectangular faces should lay flat so that the packed box should be as nearly as possible a true parallelepiped with parallel flat faces so that a number of these filled packages can stand close together in a shipping carton or on the shelves in a store.

In the drawings, Fig. 1 is a plan view of what later becomes the outside of the box, shown as it appears after being printed or otherwise ornamented.

Fig. 2 is a plan view showing what later becomes the inside of the box after the blank has been cut from the sheet and creased.

Fig. 3 is a plan view of the inside of a blank after it has been cut and creased and after the pads have been attached.

Fig. 4 is a diagrammatic sectional view through the middle of the box when folded as it is for shipment.

Fig. 5 is a diagrammatic cross sectional view through the laps and flaps of a box when folded as for shipment.

Fig. 6 is a perspective view of one end of a box when set up or expanded ready to receive its contents.

Fig. 7 is a side elevation partly in section of a box with its contents in place.

Fig. 8 is a vertical section of a box made in a slightly modified way.

In the drawings in Fig. 1, A represents a sheet of bendable cardboard of such character that it can be ornamented as by printing or lithographing as shown at B. The first process is to ornament the one side which will be the outside of the finished article sufficiently indicated by B.

In Fig. 2, I show the blank C at the end of the next process in which it has been cut out of the sheet A and either in the same or a subsequent process has been formed with the various creases which will be described hereinafter.

1, 2, 3 and 4 represent the four connected outer walls, the connections being creased at 50, 51, and 52. There is also a crease at 53 and beyond this, which I will call one free edge, an overlapping extension 9 which is relatively narrow and later is fastened as by cementing or gluing to the free edge 19 of wall 3.

Foldable laps 21 and 23 can be bent or folded at the creases 61 and 63 at one end of the opposite side walls 3 and 1 and 41 and 43 are foldable laps foldable on the creases 62 and 66 at the other ends of the same walls 1 and 3.

5 and 7 are flaps foldable at the creases 70 and 71 respectively, each having a tongue such as 6 or 8.

13, 12, 11 and 14 are interior pads shown as being of corrugated paper which are stuck to the inside of the side walls 1, 2, 3 and 4 prferably by glue or cement, each pad being narrower than the wall to which it is attached.

The pads 14 and 12 attached to what I will call the front and back walls have at opposite ends, the pad flaps 15 and 17, each of which extends beyond the corresponding outer wall and is creased at the same lines 70 and 71 at the junction of its outer wall such as 4 and flap 5 or wall 2 and flap 7 so that beyond such

line the outer wall flap and the pad flap are free to move alone.

This capacity to move alone is one of the most important features of my device.

The pad on the opposite wall such as 12 when considered from the wall 4, and 14 when considered from the wall 2, is unattached at 120 or 140 between a line such as 72 or a line such as 73 near the end sufficiently to receive a tongue such as 6 or 8 which goes in between this unattached end and the adjoining outer wall.

The various pads 13, 12, 11 and 14 can all be cemented in place while the blank is laid out in the flat position shown in Fig. 2.

The next step is to fasten, preferably by cementing or gluing, the overlapping edge 9 inside of the free edge 19 of wall 3. When this is done the complete padded carton is ready to be shipped with all of its pads in place.

When a bottle such as, for instance, F having a base 90, neck 91 and cap 92 is to be put in place, the pad flap such as 17 is first turned in, then the side laps 41 and 43, after which the end flap 7 is turned in and its tongue 8 is inserted betwen the unattached end 140 of pad 14 thereby closing the bottom.

The bottle is now inserted with its bottom 90 resting on the bottom and protected by flap pad 17, while its body is protected by the four side pads 13, 12, 11 and 14 after which the pad flap 15 is bent down on to the cap 92, the side laps 21 and 23 are folded in and then the flap 5 is bent down, the tongue 6 going in between the unattached end 120 of pad 12 and the outer wall.

In Fig. 8, I show a box with the sides 80, 81, 82 and 83 which have no laps but the side 80 has the flap 84 with tongue 85.

The pads such as 86 are on the sides 81 and 83 are the same as in the other construction, as is also the pad 87 with the foldable extension 88 but the pad 89 on the side 82 stops at the point 189 so that the tongue 85 does not go behind a pad but simply behind the inside of the outer layer or wall.

Obviously I may use other suitable material for my pads besides corrugated paper.

I claim:

1. The combination in a collapsible box, of an outer layer which is formed from a blank of light bendable cardboard cut, creased and bent to form four connected rectangular outer walls, one free edge being fastened to an overlapping extension of the opposite free edge, said carton having at each end of each opposite side wall, a foldable lap and between said laps, a foldable flap in extension of another wall, said flap having a tongue; with interior pads of corrugated paper stuck to the inside of the side walls, each of said pads being narrower than the wall to which it is attached, the two pads which are fastened to the front and back walls having foldable pad flaps each of which extends beyond the opposite end of an outer wall, each pad being creased at the junction between the outer wall and its flap so that beyond such crease line, the outer wall flap and the pad flap are each free to move alone, the pad on each opposite wall being unattached near its end a sufficient distance to permit a flap tongue to lie flat against the inside of the outer layer behind the end of a pad.

2. The combination in a collapsible box, of an outer layer which is formed from a blank of light bendable cardboard cut, creased and bent to form four connected rectangular outer walls, one free edge being fastened to an overlapping extension of the opposite free edge, said carton having at each end of each opposite side wall, a foldable lap and between said laps, a foldable flap in extension of another wall, said flap having a tongue; with interior pads stuck to the inside of the side walls, each of said pads being narrower than the wall to which it is attached, the two pads which are fastened to the front and back walls having foldable pad flaps each of which extends beyond the opposite end of an outer wall, each pad being creased at the junction between the outer wall and its flap so that beyond such crease line, the outer wall flap and the pad flap are each free to move alone, the pad on each opposite wall being unattached near its end a sufficient distance to permit a flap tongue to lie flat against the inside of the outer layer.

3. The combination in a collapsible box, of an outer layer which is formed from a blank of light bendable cardboard cut, creased and bent to form four connected rectangular outer walls, said carton having at one end of a front wall and at the opposite end of a back wall, a foldable flap in extension of its respective wall, each flap having a tongue; with interior pads stuck to the inside of the side walls, each of said pads being narrower than the wall to which it is attached, the two pads which are fastened to the front and back walls having foldable pad flaps each of which extends beyond the opposite end of an outer wall, each pad being creased at the junction between the outer wall and its flap so that beyond such crease line, the outer wall flap and the pad flap are each free to move alone, the pad on each front and back wall being so made as to permit a flap tongue to lie flat against the inside of the outer layer.

ORLANDO W. FOSS.