(19) DANMARK

(10) **DK/EP 2837396 T3**

Patent- og Varemærkestyrelsen

(12) Oversættelse af europæisk patentskrift

(51) Int.Cl.: ***A 61 M 5/20 (2006.01)***

(45) Oversættelsen bekendtgjort den: **2016-08-22**

(80) Dato for Den Europæiske Patentmyndigheds bekendtgørelse om meddelelse af patentet: **2016-05-11**

(86) Europæisk ansøgning nr.: **14193283.0**

(86) Europæisk indleveringsdag: **2012-08-23**

(87) Den europæiske ansøgnings publiceringsdag: **2015-02-18**

(30) Prioritet: **2011-08-24 US 201161526995 P**

(62) Stamansøgningsnr: **12766198.1**

(84) Designerede stater: **AL AT BE BG CH CY CZ DE DK EE ES FI FR GB GR HR HU IE IS IT LI LT LU LV MC MK MT NL NO PL PT RO RS SE SI SK SM TR**

(73) Patenthaver: **Unitract Syringe Pty Ltd, Suite 3, Level 11 , 1 Chifley Square, Sydney, NSW 2000, Australien**

(72) Opfinder: **Kaal, Joseph Hermes, 86 Canterbury Drive, Raworth, New South Wales 2321, Australien**
Rafferty, Christopher Charles, 253 Morpeth Road, Raworth, New South Wales 2321, Australien
Thorley, Craig Stephen, 19 George Street, Largs, New South Wales 2320, Australien
Ondrejicka, Joel M., 470 Mr. Airy Road, Lewisberry, Pennsylvania 17339, USA
Lumme, Katlin Marie, 80 Queen Anne Drive, Mableton, GA 30126, USA
Weaver, Philip A., 1102 Robertson Way, Glenmoore, PA 19343, USA

(74) Fuldmægtig i Danmark: **Holme Patent A/S, Valbygårdsvej 33, 2500 Valby, Danmark**

(54) Benævnelse: **Auto-injektor til returnerbar forfyldt sprøjte**

(56) Fremdragne publikationer:
WO-A1-94/21316
WO-A1-2004/047890
WO-A1-2009/007229
WO-A2-2007/002052

DESCRIPTION

FIELD

[0001] THIS INVENTION relates to automatic injectors for retractable syringes. More particularly, this invention relates to actuation mechanisms for automatic injectors, automatic injectors for retractable syringes, the methods of operating such devices, and the methods of assembling such devices.

BACKGROUND

[0002] Manually activated syringes are commercially available from a variety of manufacturers, including the owner and assignee of the present invention, and are used in the administration of drug solutions, drug suspensions, vaccines, medicinal therapies, and any other liquid medicament by parenteral injection. Such syringes are commonly utilized by medical practitioners to administer injections to patients but are difficult to use by self-administering patients.

[0003] An auto-injector is an automatic injection device designed to facilitate delivery of a dose of medicament to a patient through a hypodermic needle, the injection usually being administered by the patient themselves. An auto-injector works, for example, by delivering an injection automatically upon activation by the patient. This is in contrast to a conventional manually activated syringe where the patient themselves needs to directly depress a plunger into a barrel containing medicament in order to effect the injection. Auto-injectors have proven particularly useful in allowing the medically untrained user to administer a parenteral injection, and can provide both psychological and physical advantages to patients. Patients needing to inject medication for chronic disease management have used auto-injectors since the first reusable auto injector was introduced in the 1990s. An auto injector provides protection for the primary container, generally a pre-filled syringe, and offers an easy-to-use solution for automatic injection of medication. As used herein, the terms "automatic injector" and "auto-injector" are meant to refer to the same devices.

[0004] In addition to automatic needle insertion and dose delivery, some auto-injectors also incorporate safety mechanisms to automatically protect the patient from the needle after use. The automatic injectors of the prior art are usually provided with needle shields which extend over the needle when actuated. However, such safety mechanisms may fail to actuate and/or can be easily reversed, thereby leaving the patient exposed to the needle and susceptible to injury. Additionally, known automatic injectors generally link visual, tactile or audible indicators to the end of plunger stroke or actuation of some safety mechanism, instead of to the end of drug dose. Accordingly, the self-administering patient is not provided with an indication that the drug has been fully delivered and may remove the needle or actuate the safety mechanisms prematurely.

[0005] In WO 94/21316 there is described an injection device which holds a syringe in the form of a capsule having a needle projecting from its forward end and a plunger extending from its rear end. The rear end of the plunger is received in a drive member which, when released, is urged forwards by a coil spring this projecting the needle and then expressing the dose. The drive member is held captive in its rearward primed position by a detent provided by the body of the device. A sleeve covering a substantial part of the body can shift longitudinally of it from an initial rearward position to a forward position in which it either disengages the drive member from the detent or in which a trigger is freed for actuation to release the drive member. Initially the drive member and the coil spring are telescoped together, with the spring acting against the rear end of the body and the drive member being held at its forward end.

[0006] In WO 2004/047890 there is described a syringe filled with an active agent and having an injection needle, the syringe being displaceable in a receiving part by the tension of a spring. A transmission part displaceable by at least one spring traverses a first partial path for sticking the injection needle and a second partial path for emptying the active agent. The at least one spring acts between the transmission part and an intermediate part and another spring acts between the intermediate part and a supporting part that is fixedly connected to the receiving part. An indicating device that is visible from the outside is connected to the intermediate part. The indicating device that is visible through a transparent part moves only during the second partial course and traverses a path that is substantially smaller than the sum of both partial strokes.

SUMMARY

[0007] The present invention provides actuation mechanisms for automatic injectors, automatic injectors for retractable syringes, the methods of operating such devices, and the methods of assembling such devices. Automatic injectors embodying the present invention provide integrated safety features which automatically retract the needle or cannula into the device to, for example, prevent injuries related to accidental needlestick. Additionally, embodiments of the present invention provide true end of dose indication to users, informing the user that the drug delivery has completed and that the device is safe for removal and disposal. Accordingly, the novel devices of the present invention alleviate one or more of the problems associated with prior art devices, such as those referred to above.

[0008] According to a first aspect of the present invention there is provided an automatic injector comprising a housing, an activation mechanism, an actuation mechanism, and a syringe cartridge having a plunger and a needle assembly, wherein the actuation mechanism comprises a first actuation spring, a first actuation pill, a second actuation spring, and a second actuation pill, wherein in an initial configuration the first actuation spring resides in a compressed, energized state substantially within an upper portion of first actuation pill and the second actuation spring resides in a compressed, energized state between the first actuation pill and the second actuation pill, and wherein the syringe cartridge is a retractable syringe that comprises a retractable needle assembly, characterised in that the plunger is capable of engaging the retractable needle assembly to facilitate retracting the retractable needle assembly.

[0009] The first actuation pill and the second actuation pill may be detachably connected by engagement between one or more connector prongs of the first actuation pill and one or more respective connection bridges of second actuation pill. The one or more connector prongs of the first actuation pill may each have protrusions which extend outwards from the first actuation pill.

[0010] The first actuation pill may have one or more locking hooks at a proximal end of the first actuation pill. Similarly, the second actuation pill may have one or more retention prongs at a distal end of the second actuation pill. Furthermore, the first actuation pill may have one or more guide prongs extending outwards from the first actuation pill. The first actuation pill and second actuation pill are preferably substantially cylindrical and may be made of a number of standard materials, preferably the same or different plastics.

[0011] The housing may be a single component or may comprise two or more components such as, for example, an upper housing and a lower housing. The upper housing, the lower housing, the first actuation pill, and the second actuation pill may be a myriad of shapes, but are preferably substantially cylindrical.

[0012] In at least one embodiment of the present invention, the first actuation pill has one or more locking hooks at a proximal end of the first actuation pill which initially engage a locking plateau at an interior proximal end of the housing. The activation mechanism is capable of engaging the one or more locking hooks of the first actuation pill to disengage the locking hooks from the locking plateau of the housing upon activation by the user. The activation mechanism may include one or more locking grooves within which corresponding locking prongs of the housing may travel. In one configuration of the activation mechanism, the locking prongs may prevent activation of the activation mechanism. In another configuration of the activation mechanism, however, such as by rotation of the activation mechanism for example, the locking prongs may permit the activation of the activation mechanism.

[0013] In a preferred embodiment, the first actuation pill and the second actuation pill reside within the housing and are detachably connected with each other by engagement between one or more connector prongs of the first actuation pill and one or more respective connection bridges of second actuation pill. The one or more connector prongs may each have protrusions which interface with longitudinal channels along an inner surface of the housing. One or more recesses may exist on the inner surface of the housing, wherein, when the protrusions of the connector prongs interface with the recesses, the expansion of the protrusions into the recesses permits the one or more connector prongs of the first actuation pill to disengage from the one or more respective connection bridges of second actuation pill. According, by user action on the activation mechanism, the activation mechanism engages the one or more locking hooks of the first actuation pill to disengage the locking hooks from the locking plateau of the housing. This action permits the first actuation spring to expand, thereby translating the actuation mechanism within the housing in the distal direction along the axis of the automatic injector. As the protrusions reach recesses within the inner surface of the housing, the one or more connector prongs of the first actuation pill are permitted to disengage from the one or more respective connection bridges of second actuation pill. This action permits the second actuation spring to expand, thereby translating the second actuation pill in the distal direction along the axis of the automatic injector. If the syringe cartridge contains a drug treatment, such as in the case of a pre-filled syringe, the function of the actuation mechanism may be utilized to inject a needle and deliver the drug treatment into a patient. Optionally, the actuation mechanism may further be utilized to activate a retraction mechanism.

[0014] The retractable syringe contains safety features which retract the needle after use, providing desirable needle-stick

prevention, and prevent re-use of the syringe. Suitably, the plunger is slidably moveable within the barrel of the syringe to thereby facilitate delivery of the drug treatment to a user, patient or other recipient. The retractable syringe includes a retractable needle assembly. The plunger is capable of engaging the needle assembly, or a portion thereof, to retract the cannula or needle. Suitably, retraction of the needle is facilitated by a biasing member such as a spring, elastic or other member capable of storing and releasing energy to facilitate needle retraction. It will be appreciated that the retractable syringe may comprise any needle retraction mechanism that is operable with the automatic injector disclosed herein. By way of example, the needle retraction mechanism may be as described in International Publication WO2006/119570, International Publication WO2006/108243, International Publication WO2009/003234 and International Publication WO2011/075760, although without limitation thereto.

[0015] According to one embodiment, the retractable syringe comprises: a plunger comprising a biasing member, a plunger inner, a plunger outer and one or more locking members, wherein the plunger inner and plunger outer co-operate to releasably maintain said biasing member in an initially energized state; and a needle assembly comprising the retractable needle, wherein the retractable needle comprises a cannula and a needle body engageable by the plunger inner. Preferably, a plunger seal is mounted to the plunger inner and is capable of engaging said needle body. Preferably, the needle assembly may further comprise a needle seal that retains the retractable needle, wherein the cannula of the retractable needle passes through the needle seal to permit delivery of the mixed substances or mixture to a user, patient, or other recipient.

[0016] In at least one embodiment, the syringe further comprises a release ring. Suitably, the release ring is at a proximal end of the syringe barrel and is engageably or connectably coupled, connectable or affixed to the barrel. The release ring may be a separate component or integral with the barrel. The release ring may activate needle retraction after the plunger inner of the retractable syringe has engaged the needle body. Upon activation of needle retraction, the plunger inner and plunger outer disengage allowing the biasing member to expand from its initially energized state. The plunger outer remains substantially in contact or connection with the release ring, while the plunger inner is axially translated in the proximal direction by release of the biasing member to enable retraction of the cannula and needle body.

[0017] Suitably, the retractable syringe comprises one or more plunger locking systems. In one embodiment of said locking system, the plunger inner of the plunger comprises a locking member which is capable of engaging the release ring of the syringe after needle retraction to thereby prevent or impede further movement of the plunger inner relative to the release ring. In at least one embodiment of the present invention, the retractable syringe comprises a retraction mechanism essentially as described in WO2011/075760. Additionally or alternatively, the force of the second actuation spring acting upon the plunger outer itself may prevent or "lock-out" the plunger outer from axial travel in the proximal direction after actuation.

[0018] According to a second aspect of the present invention there is provided a method of assembling an automatic injector which includes the steps of: (i) compressing a second actuation spring between a first actuation pill and a second actuation pill and locking the second actuation spring in the compressed, energized state by detachably engaging one or more connector prongs of the first actuation pill with one or more respective connection bridges of second actuation pill; (ii) inserting a first actuation spring into a housing and compressing the first actuation spring between the housing and the first actuation pill by detachably engaging one or more locking hooks of the first actuation pill with a locking plateau of the housing, wherein the first actuation spring is initially maintained in a compressed, energized state substantially within an upper portion of the first actuation pill; and (iii) inserting a syringe cartridge comprising a plunger and a needle assembly into the housing such that a proximal end of the plunger contacts the second actuation pill. The method may further comprise the step of: attaching an activation mechanism to the housing, wherein the activation mechanism is configured to contact the one or more locking hooks of the first actuation pill upon activation.

[0019] According to a third aspect of the present invention there is provided a method of operating an automatic injector which includes the steps of: (i) disengaging one or more locking hooks of a first actuation pill from a locking plateau of a housing, wherein such disengagement permits a first actuation spring to expand substantially along a longitudinal axis of the housing from its initial energized state; (ii) disengaging one or more connector prongs of the first actuation pill from corresponding connection bridges of a second actuation pill, wherein such disengagement permits a second actuation spring to expand substantially along the longitudinal axis of the housing from its initial energized state; and (iii) activating a retraction mechanism of a syringe cartridge comprising a plunger and a needle assembly, wherein the needle assembly comprises a retractable needle having a cannula and a needle body, to retract the retractable needle. The method may further include the steps of: operating the plunger of the automatic injector. Prior to step (i), the method may further include the step of: unlocking an activation mechanism and activating the activation mechanism.

[0020] Throughout this specification, unless otherwise indicated, "comprise," "comprises," and "comprising" are used inclusively rather than exclusively, so that a stated integer or group of integers may include one or more other non-stated integers or groups

of integers.

BRIEF DESCRIPTION OF THE DRAWINGS

[0021] Non-limiting embodiments of the invention are described herein with reference to the following drawings wherein:

FIG. 1A shows an isometric view of an automatic injector, according to one embodiment of the present invention;

FIG. 1B shows an isometric view of the interior components of the automatic injector shown in FIG. 1A;

FIG. 2 shows an exploded view of an automatic injector, according to one embodiment of the present invention;

FIG. 3A shows an exploded view of an actuation mechanism for an automatic injector, according to one embodiment of the present invention, which resides substantially within the upper housing when assembled;

FIG. 3B shows an enlarged view of the actuation mechanism shown in FIG. 3A;

FIG. 3C shows a cross-sectional view of the actuation mechanism shown in FIG. 3A;

FIG. 3D shows a 90 degree rotation of the cross-sectional view shown in FIG. 3C;

FIG. 4 shows a cross-sectional view of a plunger of a retractable syringe component of an automatic injector, according to one embodiment of the present invention;

FIG. 5 shows an automatic injector including an actuation mechanism, according to one embodiment of the present invention, in a locked configuration;

FIG. 6A shows an automatic injector including an actuation mechanism, according to one embodiment of the present invention, in an injection configuration;

FIG. 6B shows an automatic injector including an actuation mechanism, according to one embodiment of the present invention, in a drug dosing configuration;

FIG. 7 shows an automatic injector including an actuation mechanism, according to one embodiment of the present invention, in a retraction activated configuration;

FIG. 8 shows an automatic injector including an actuation mechanism, according to one embodiment of the present invention, in a retraction completed configuration;

FIG. 9 shows a needle assembly engaged by a plunger prior to retraction;

FIG. 10 shows an enlarged view of the retraction activated configuration shown in FIG. 7, in which a release ring disengages a plunger inner from a plunger outer to facilitate spring decompression and needle retraction; and

FIG. 11 shows an enlarged view of the retraction completed configuration shown in FIG. 8.

DETAILED DESCRIPTION

[0022] The novel devices of the present invention provide integrated safety features which automatically retract the needle or cannula into the device and provide true end of dose indication to users. Such devices are safe and easy to use, and are aesthetically and ergonomically appealing for self-administering patients. The devices described herein incorporate features which make activation, operation, and lock-out of the device simple for even untrained users. The novel devices of the present invention provide these desirable features without any of the problems associated with known prior art devices.

[0023] As used herein to describe the actuation mechanisms, automatic injectors, syringe cartridges, or any of the relative positions of the components of the present invention, the terms "axial" or "axially" refer generally to a longitudinal axis "A" around which the actuation mechanisms and automatic injectors are preferably positioned, although not necessarily symmetrically there-around. The term "radial" refers generally to a direction normal to axis A. The terms "proximal," "rear," "rearward," "back," or "backward" refer generally to an axial direction in the direction "P" of the plunger. The terms "distal," "front," "frontward,"

"depressed," or "forward" refer generally to an axial direction in the direction "D" of the needle. As used herein, the term "glass" should be understood to include other similarly non-reactive materials suitable for use in a pharmaceutical grade application that would normally require glass. The term "plastic" may include both thermoplastic and thermosetting polymers. Thermoplastic polymers can be re-softened to their original condition by heat; thermosetting polymers cannot. As used herein, the term "plastic" refers primarily to moldable thermoplastic polymers such as, for example, polyethylene and polypropylene, or an acrylic resin, that also typically contain other ingredients such as curatives, fillers, reinforcing agents, colorants, and/or plasticizers, etc., and that can be formed or molded under heat and pressure. As used herein, the term "plastic" does not include either glass or elastomers that are approved for use in applications where they are in direct contact with therapeutic liquids that can interact with plastic or that can be degraded by substituents that could otherwise enter the liquid from plastic. The term "elastomer," "elastomeric" or "elastomeric material" refers primarily to cross-linked thermosetting rubbery polymers that are more easily deformable than plastics but that are approved for use with pharmaceutical grade fluids and are not readily susceptible to leaching or gas migration. "Fluid" refers primarily to liquids, but can also include suspensions of solids dispersed in liquids, and gasses dissolved in or otherwise present together within liquids inside the fluid-containing portions of syringes. The term "spring" is used herein with reference to one or more "biasing members," and any type of spring or other biasing member may be utilized within the invention herein.

[0024] FIGS. 1A and FIG. 1B show an embodiment of automatic injector 100 which includes upper housing 14 and lower housing 16. Upper housing 14 and lower housing 16 may be made of any of a number of materials including plastics and glass, but are preferably made of plastic. Upper housing 14 and lower housing 16 may be one unified component consisting of two portions or, as shown in FIGS. 1A and 1B, two separate components. When upper housing 14 and lower housing 16 are two separate components they may be fixedly connected, for example by a glue or adhesive, or removably attached, for example by a screw-fit connection. Automatic injector 100 may also include activation mechanism 12 and cap 18. FIG. 1B shows the interior components of automatic injector 100, i.e., with the upper housing 14 and lower housing 16 hidden from view. As shown in FIG. 1B, automatic injector 100 includes activation mechanism 12, actuation mechanism 10, and syringe cartridge 20 having a plunger 200 (shown in FIG. 4) and needle assembly 40. Cap 18 has been removed for operation of the automatic injector 100 shown in FIG. 1B, but would be removably attached to automatic injector 100 at the distal end D of the device and removed at time of use by the user. FIG. 1B shows the components of actuation mechanism 10 and automatic injector 100, according to at least one embodiment of the present invention, in a locked configuration.

[0025] In at least one embodiment, the activation mechanism 12 is a button which may, for example, be rotated to unlock the device and depressed to activate the device, as is detailed further herein. The activation mechanism is shown at proximal end P of automatic injector 100. Typically, drug chamber 222 contains a liquid substance or drug dose for delivery through the needle assembly 40 to a patient. Upon depression, i.e., axial motion in the distal direction, activation mechanism 12 permits actuation mechanism 10 to actuate the needle injection, drug dose delivery, and retraction activation stages of operation. Retraction activation by the actuation mechanism 10 enables retraction of the needle assembly 40 into syringe cartridge barrel 202 and automatic injector 100, as is detailed further herein.

[0026] FIGS. 3A-3D further detail the actuation mechanism 10, according to at least one embodiment of the present invention, which is a component of the automatic injector. FIG. 3A shows the components of actuation mechanism 10 in an exploded view, in addition to upper housing 14, while FIG. 3B shows these components in a compressed view prior to actuation. In at least one embodiment, actuation mechanism 10 includes first actuation spring 102, first actuation pill 104, second actuation spring 106, and second actuation pill 108. In a compressed configuration prior to actuation, the first actuation spring 102 rests in a compressed, energized state substantially within an upper portion of first actuation pill 104. In this compressed configuration, first actuation pill 104 and second actuation pill 108 are detachably connected, as shown in FIG. 3B, between which second actuation spring 106 resides in a compressed, energized state. Actuation mechanism is maintained in a compressed state by engagement between connector prongs 104B of first actuation pill 104 and connection bridges 108B of second actuation pill 108. The connector prongs 104B and connection bridges 108B are maintained in engagement by interaction between protrusions 104D of first actuation pill 104 and the inner diameter of upper housing 14, as is detailed below. Protrusions 104D may travel within longitudinal channels in the inner diameter of the housing to maintain the rotational alignment of the actuation mechanism. Guide prongs 104C of first actuation pill 104 similarly interface with the inner diameter of the housing to maintain the actuation mechanism 10 in rotational alignment within the automatic injector.

[0027] FIGS. 3C-3D provide cross-sectional views of the actuation mechanism 10 within upper housing 14 prior to activation or actuation of the automatic injector. FIG. 3D shows a 90 degree axial rotation view of the view shown in FIG. 3C. As shown, locking hooks 104A of first actuation pill 104 initially engage locking plateau 14B of upper housing 14. Upon activation of the automatic injector and actuation mechanism by the activation mechanism, locking hooks 104A are caused to move radially inwards and disengage from locking plateau 14B. As would be appreciated by an ordinarily skilled artisan, the term "hooks" is meant to

reference any type of engagement mechanism including, for example, prongs, latches, tabs, and the like. Upon such disengagement, first actuation spring 102 is permitted to expand from its compressed, energized state, thereby axially translating first actuation pill 104 in the distal direction. First actuation pill 104 and second actuation pill 108 are retained in engagement during this initial axial translation due to the engagement between connector prongs 104B of first actuation pill 104 and connection bridges 108B of second actuation pill 108 described above. Such operation of the actuation mechanism 10 is also shown in FIGS. 5, 6A, and 6B, in which actuation mechanism 10 is incorporated into an automatic injector 100. As shown in FIG. 5, retention prongs 108A of second actuation pill 108 are initially used to engage bottom of release ring 236 to maintain the position of the syringe cartridge and needle assembly within the housing during, for example, removal of the needle shield. The retention prongs 108A may also be used to brace against barrel 202 of syringe cartridge 20 to ensure substantially axial alignment of these components during storage, transport, and operation of the actuation mechanism and automatic injector. Support ring 22 may similarly be utilized to ensure substantially axial alignment of the components.

[0028] Referring now to FIGS. 5-8, expansion of the first actuation spring 102 and the resulting axial translation of the actuation mechanism 10 in the distal direction causes exposure of the needle assembly 40 from the distal end of the automatic injector, such as for injection of a needle into a user. This is evident in the transition of components shown in FIGS. 5, 6A, and 6B. The axial translation of the actuation mechanism in the distal direction causes plunger 200 to also move in the distal direction, while syringe cartridge is held substantially in place by engagement between release ring 236 and lower housing plateaus 16A. Lower housing plateaus 16A may also be located at various positions within the lower housing to limit the depth of needle insertion. Distal translation of the plunger 200 within barrel 202 of syringe cartridge 20 forces a liquid, such as a drug treatment, from drug chamber 222 through needle assembly 40 and into a user for drug delivery, as is detailed further below. As such, expansion of the first actuation spring 102 initially drives insertion of the needle into the patient to a desired depth specified by the location of the lower housing plateaus 16A within the housing. Upon interaction between release ring 236 and lower housing plateaus 16A to block further travel of the syringe cartridge, the continued expansion of the first actuation spring 102 proceeds to translate plunger 200 within barrel 202 to deliver the drug dose.

[0029] Referring now to FIG. 4, plunger 200 comprises plunger inner 210 comprising shaft 211, arm 232, annular ledge 212 and seal-engaging member 216, which in this embodiment is a screw threaded projection at the distal end of plunger 200, which engages complementary, screw-threaded recess 820 of plunger seal 800. Plunger seal 800 further comprises needle-engaging portion 810. Plunger 200 further comprises plunger outer 220 having elongate body 221 with base 225 and locking member 227. Plunger 200 further comprises plunger spring 270 which is mounted between plunger inner 210 and plunger outer 220, held in an initially compressed state between ledge 212 of plunger inner 210 and base 225 of plunger outer 220. Initially, ledge 235 of arm 232 abuts rim 229 of plunger outer 220 to prevent axial movement of plunger inner 210 relative to plunger outer 220. However, arm 232 of plunger inner 210 is resiliently flexible and movable in the direction of the solid arrow shown in FIG. 4, which will allow disengagement of plunger inner 210 from plunger outer 220 to facilitate decompression of plunger spring 270, as will be described hereinafter.

[0030] Referring now to FIG. 9, needle assembly 40 includes cannula 410, needle body 420, retainer 300, needle seal 430 and ejector 600. The needle assembly 40 is mounted into the distal end of barrel 202 of the syringe cartridge. FIG. 9 shows the components in the retraction activation stage, when contact between plunger seal 800 and needle seal 430, needle seal 430 and ejector 600, and ejector 600 and arms 320A, B of retainer 300 cause hook-ends 321A, B of retainer 300 to disengage from needle body 420 for retraction of needle assembly 40. Cannula 410 may be a number of fluid tubes but is preferably a rigid needle, such as a rigid steel needle. Prior to or upon retraction activation, plunger recess 860 of plunger seal 800 engages proximal segment 425 of needle body 420 for retraction of needle assembly 40. The retraction activation stage is detailed further with reference to the operation of automatic injector 100 in FIGS. 5-8 hereinafter.

[0031] Operation of actuation mechanism 10 and automatic injector 100 will be described with particular reference to FIGS. 1-3 and 5-8. In these embodiments, drug chamber 222 of barrel 202 contains a fluid suitable for injection into a user. As evident in FIG. 5, safety cap 18 (shown also in FIG. 1A) has been removed from lower housing 16 to allow activation of the device, injection of the needle assembly, and drug delivery. Initially, activation mechanism 12 is in a locked configuration enabled by the releasable engagement between locking prongs 14A of upper housing 14 and locking grooves 12A of activation mechanism 12. Locking grooves 12A may be channels, detents, or the like along the radial circumference of the activation mechanism, as shown in FIG. 1B, within which locking prongs 14A may travel. Initially, the locking prongs 14A are in a position within the locking grooves 12A which prevents depression of the activation mechanism 12. The activation mechanism 12 may be rotated around the longitudinal axis to an unlocked position, where the locking prongs 14A are aligned with a portion of the locking grooves 12A that permits axial depression of the activation mechanism 12. Optionally, an activation spring 122 may be retained within the activation mechanism 12, between the activation mechanism and the proximal end of the upper housing 14, for example to maintain the activation mechanism 12 in a locked position until user operation and to provide the user tactile resistance upon activation. This provides useful user feedback to ensure that the proper injection procedures are followed with the device and that removal of the

cap is completed prior to injection.

[0032] In the configurations shown in FIG. 3D and FIG. 5, locking hooks 104A of first actuation pill 104 initially engage locking plateau 14B of upper housing 14. After removal of the cap and unlocking of the activation mechanism, such as by axial rotation of the activation mechanism, the device may be placed in contact with the target location of the user and activated for injection, drug delivery, and needle retraction. Upon activation of the automatic injector and actuation mechanism by the activation mechanism, locking hooks 104A are caused to move radially inwards and disengage from locking plateau 14B. Upon such disengagement, first actuation spring 102 is permitted to expand from its compressed, energized state, thereby axially translating first actuation pill 104 in the distal direction. First actuation pill 104 and second actuation pill 108 are retained in engagement during this initial axial translation due to the engagement between connector prongs 104B of first actuation pill 104 and connection bridges 108B of second actuation pill 108 described above. This stage initiates needle insertion into the patient and begins drug delivery to the patient.

[0033] FIGS. 6A and 6B show the automatic injector, in a cross-sectional view that is 90 degrees rotated around the axis from the view shown in FIG. 5, after the device has been activated. As the first actuation spring 102 continues to expand from its compressed, energized state, it causes axial translation of the actuation mechanism in the distal direction. This action of the actuation mechanism forces plunger 200 to also move in the distal direction (in the direction shown by the hatched arrow), while syringe cartridge 20 is held substantially in place by engagement between release ring 236 and lower housing plateaus 16A. Lower housing plateaus 16A may also be located at various positions within the lower housing to limit the depth of needle insertion. Distal translation of the plunger 200 within barrel 202 of syringe cartridge 20 forces a liquid, such as a drug treatment, from drug chamber 222 through needle assembly 40 and into a user for drug delivery. The dimensions of the components and the lengths of axial travel within the device are configured such that protrusions 104D of first actuation pill 104 reach interior recesses 16D of lower housing 16 just prior to, or substantially at the same time as, plunger seal 800 contacts the needle seal of needle assembly 40, effectively ensuring that the recess of needle seal 800 has engagedly captured segment 425 of the needle body of the needle assembly 40 for retraction prior to activation of the retraction mechanism. Alternatively, interior recesses may be dimensioned and located at various points in the upper housing, or within a unified housing body, yet function in the same manner as described in the embodiment shown in FIGS. 6A and 6B. Similarly, interior recesses may be changes in inner diameter between the upper and lower housings. At this stage, protrusions 104D of first actuation pill 104 are permitted to spring radially outwards into interior recesses 16D of lower housing 16 (in the directions shown by the solid arrows in FIG. 6B). This action enables connector prongs 104B of first actuation pill 104 to disengage from connection bridges 108B of second actuation pill 108, thereby actuating the function of the second actuation pill.

[0034] FIG. 7 shows the automatic injector, in the same cross-sectional viewing angle as FIG. 5, as the second actuation pill is actuated. As described above, upon release of the connector prongs 104B of first actuation pill 104 from their engagement with connection bridges 108B of second actuation pill 108, second actuation spring 106 is permitted to expand from its compressed, energized state, thereby driving the plunger further in the distal direction. Second actuation spring 106 is prevented from driving the first actuation pill in the proximal direction by surface interaction between guide prongs 104C of the first actuation pill and lockout notches 14C of upper housing 14. This configuration ensures that substantially all of the energy stored in the second actuation spring 106 is released in the distal direction. The second actuation pill 108 functions to ensure that all of the drug treatment is delivered to the user and to activate the needle retraction mechanism.

[0035] In at least one embodiment of the present invention, the needle retraction is essentially similar to that described in WO2011/075760, and will be briefly described as follows with reference to FIGS. 7-11. During delivery of fluid contents, plunger 200 moves axially through barrel 202 in the direction of the hatched arrow in FIG. 7. As shown in FIG. 9, plunger seal 800 bears against needle seal 430, which in turn bears against ejector 600. Further to this, ejector ring 610 moves hook-ends 321A, B of arms 320A, B of retainer 300 radially outwardly in the direction of the solid arrows in FIG. 9, thereby disengaging needle body 420 from retainer 300 to release needle body 420 and cannula 410 for subsequent retraction. At this point, recessed seat 810 of plunger seal 800 has engaged segment 425 of retractable needle body 420 and recess 860 has received fluid end 412 of cannula 410. This effectively couples needle body 420 and cannula 410 to plunger inner 210 since plunger inner 210 is connected to the proximal end of plunger seal 800.

[0036] As shown in FIG. 7 and FIG. 10, in order for needle body 420 and cannula 410 to retract at the end of delivery of fluid contents, compressed spring 270 must decompress, which is facilitated by plunger inner 210 disengaging from plunger outer 220. This disengagement is facilitated by release ring 236. As plunger inner 210 and plunger outer 220 are substantially fully depressed (i.e., axially translated in the distal direction as per the hatched arrow) to inject fluid from barrel 202, one or both may contact release ring 236. Through this contact, release ring 236 moves arm 232 radially inwardly (in the direction of the solid arrow) and out of engagement with rim 229 of plunger outer 220. This disengagement allows compressed spring 270 to

decompress and push against ledge 212 (shown in FIG. 4 and FIG. 7) of plunger inner 210 to thereby retract plunger inner 210 with plunger seal 800, needle body 420, and cannula 410 coupled thereto. Plunger outer 220 remains substantially in contact or connection with release ring 236, while plunger inner 210 coupled to needle body 420 and cannula. 410 is axially translated in the proximal direction by decompression of spring 270, thereby retracting cannula 410 and needle body 420. FIG. 8 and FIG. 11 show the components of the automatic injector after needle retraction has completed. At this stage, cannula 410 is fully retracted into the housing and/or barrel 202. This needle or cannula retraction is highly desirable as it provides integrated safety features while simultaneously providing a true end of dose indication to the user.

[0037] Suitably, automatic injector 100 provides one or more locking systems for plunger 200. As shown in FIGS. 7, 8, and 11, in one embodiment of said locking system, plunger outer 220 of plunger 200 includes locking member 227 having edge 228 which engages underside 237 of release ring 236 after needle retraction. This engagement prevents or impedes further movement of plunger 200 relative to the release ring 236 in the proximal direction, as shown in FIG. 11, while plunger inner 210 is permitted to move in the proximal direction. Accordingly, in addition to initially assisting in the activation of needle retraction, the release ring 236 may secondarily function to lock plunger 200 after initial use to thereby prevent re-use. As stated above, the force of the second actuation spring acting upon the plunger outer itself may additionally or alternatively prevent or "lock-out" the plunger outer from axial travel in the proximal direction after actuation.

[0038] Certain optional standard components or variations of automatic injector 100 are contemplated while remaining within the breadth and scope of the present invention. For example, upper or lower housings may optionally contain one or more transparent or translucent windows 50, as shown in FIG. 1, to enable the user to view the operation of the automatic injector or verify that drug dose has completed. Additionally, an optional needle shield 52 may be utilized, as shown in FIG. 5, to protect cannula 410. The needle shield 52 may be connected, for example, to cap 18 and removed prior to operation of the automatic injector 100. Similarly, one or more of the components of actuation mechanism 10 and automatic injector 100 may be modified while remaining functionally within the breadth and scope of the present invention. For example, as described above, while the housing of automatic injector 100 is shown as two separate components upper housing 14 and lower housing 16, these components may be a single unified component. Similarly, while support ring 22 is shown as a separate bracing component, it may be a pre-formed aspect on the inner diameter of the housing. Such standard components and functional variations would be appreciated by one having ordinary skill in the art and are, accordingly, within the breadth and scope of the present invention. It will be appreciated from the foregoing that the actuation mechanisms and automatic injectors disclosed herein provide an efficient and easily-operated system for automated drug delivery from a drug container, with integrated safety features and true end of dose indication to the user.

[0039] Assembly and/or manufacturing of actuation mechanism 10, automatic injector 100, or any of the individual components may utilize a number of known materials and methodologies in the art. For example, a number of known cleaning fluids such as isopropyl alcohol and hexane may be used to clean the components and/or the devices. A number of known adhesives or glues may similarly be employed in the manufacturing process. Additionally, known siliconization fluids and processes may be employed during the manufacture of the novel components and devices. Furthermore, known sterilization processes may be employed at one or more of the manufacturing or assembly stages to ensure the sterility of the final product.

[0040] The automatic injector may be assembled in a number of methodologies. In one method, the second actuation spring is first compressed between a first actuation pill and a second actuation pill. The second actuation spring may be locked in a compressed, energized state by detachably engaging one or more connector prongs of the first actuation pill with one or more respective connection bridges of second actuation pill. A first actuation spring may subsequently be inserted into a housing and compressed between the housing and the first actuation pill by detachably engaging one or more locking hooks of the first actuation pill with a locking plateau of the housing. In this configuration, wherein the first actuation spring is initially maintained in a compressed, energized state substantially within an upper portion of the first actuation pill. A syringe cartridge comprising a plunger and a needle assembly may be inserted into the housing such that a proximal end of the plunger contacts the second actuation pill. Alternatively, the syringe cartridge, or components thereof including the plunger, may be connected to the second actuation pill prior to insertion of the components into the housing. For example, the proximal end of the plunger outer may interface with one or more engagement features within the second actuation pill. This enables, for example, rotational alignment of the plunger, prevents shifting of the plunger from a substantially axial alignment, and helps ensure an even distribution of force onto the plunger upon actuation of the first and second actuation pills. The syringe cartridge may be a number of syringes such as, for example, a prefilled syringe containing a drug treatment. Preferably, the syringe is a prefilled retractable syringe, as described above. The method may further include the step of: attaching an activation mechanism to the housing, wherein the activation mechanism is configured to contact the one or more locking hooks of the first actuation pill upon activation. The activation mechanism may be positioned such that it is in a locked configuration for, for example, shipping and storage of the automatic injector. Additionally, the method may include the step of attaching a cap having a needle shield aspect, or attaching separate cap and needle shield, to the distal end of the syringe cartridge and automatic injector. When the cap and needle shield

are separate components, the support ring may be utilized to brace the proximal end of the needle shield during attachment of the cap. This also helps to prevent pressurization of the syringe cartridge during assembly.

[0041] As discussed above, a glue or adhesive may be utilized to affix one or more components of the actuation mechanism and/or automatic injector to each other. Alternatively, one or more components of the actuation mechanism and/or automatic injector may be a unified component. For example, the upper housing and lower housing may be separate components affixed together by a glue or adhesive, a screw fit connection, an interference fit, and the like; or the upper housing and lower housing may be a single unified component. These components may be sterilized individually or together, and may be assembled in a sterile environment or sterilized after assembly. Similarly, the assembly of the embodiments of the present invention may utilize a number of other standard manufacturing practices.

[0042] The automatic injector may be utilized in a number of different ways. For example, in one embodiment the method of operating an automatic injector includes the step of: (i) disengaging one or more locking hooks of a first actuation pill from a locking plateau of a housing, wherein such disengagement permits a first actuation spring to expand substantially along a longitudinal axis of the housing from its initial energized state. The expansion of the first actuation spring translates the actuation mechanism substantially along an axis of the automatic injector in the distal direction. As the first actuation pill reaches one or more recesses in the inner surface of the housing, the first actuation pill is permitted to disengage from the second actuation pill. In a preferred embodiment, this disengagement occurs when one or more connector prongs of the first actuation pill disconnect from corresponding connection bridges of the second actuation pill. This disconnection permits a second actuation spring to expand substantially along the longitudinal axis of the housing from its initial energized state.

[0043] Protrusions on the connector prongs of the first actuation pill may be utilized to bias the connector prongs into engagement with the connection bridges when in the connected stage. Such protrusions may be permitted to expand into the recesses of the inner surface of housing as the actuation mechanism reaches the recesses, thereby permitting disconnection between the one or more connector prongs of the first actuation pill and the corresponding connection bridges of the second actuation pill. The actuation mechanism may initially drive the needle injection and drug delivery into the patient. Subsequently, the actuation mechanism activates the retraction mechanism of the syringe cartridge, as described above. The method may further include the steps of: operating the plunger of the automatic injector to deliver a substance to a recipient. Prior to step (i), the method may further include the step of: unlocking an activation mechanism and activating the activation mechanism, as described above.

[0044] Throughout the specification, the aim has been to describe the preferred embodiments of the invention without limiting the invention to any one embodiment or specific collection of features. Various changes and modifications may be made to the embodiments described and illustrated without departing from the present invention.

REFERENCES CITED IN THE DESCRIPTION

This list of references cited by the applicant is for the reader's convenience only. It does not form part of the European patent document. Even though great care has been taken in compiling the references, errors or omissions cannot be excluded and the EPO disclaims all liability in this regard.

Patent documents cited in the description

- WO9421316A [0005]
- WO2004047890A [0006]
- WO2006119570A [0014]
- WO2006108243A [0014]
- WO2009003234A [0014]
- WO2011075760A [0014] [0017] [0035]

Krav

1. Automatisk injektor (100), som omfatter et hus (14,16), en aktiveringsmekanisme (12), en aktueringsmekanisme (10), og en sprøjteindsats (20) med et stempel (200) og en nåleenhed (40),
hvori aktueringsmekanismen (10) omfatter en første aktueringsfjeder (102), en første aktueringspille (104), en anden aktueringsfjeder (106), og en anden aktueringspille (108),
hvori den første aktueringsfjeder (102) i en indledende udformning befinder sig i en komprimeret, aktiveret tilstand i det væsentlige inden i en øvre del af den første aktueringspille (104), og den anden aktueringsfjeder (106) befinder sig i en komprimeret, aktiveret tilstand mellem den første aktueringspille (104) og den anden aktueringspille (108), og
hvori sprøjteindsatsen (20) er en returnerbar sprøjte, der omfatter en returnerbar nåleenhed (40),
kendetegnet ved,
at stemplet (200) kan indgribe med den returnerbare nåleenhed (40) for at gøre det lettere at returnere den returnerbare nåleenhed (40).

2. Automatiske injektor (100) ifølge krav 1, hvori huset (14,16) omfatter et øvre hus (14) og et nedre hus (16), og hvori det øvre hus (14), det nedre hus (16), den første aktueringspille (104), og den anden aktueringspille (108) i det væsentlige er cylindriske.

3. Automatisk injektor (100) ifølge ethvert af kravene 1-2, hvori den første aktueringspille (104) og den anden aktueringspille (108) befinder sig inden i huset (14,16) og løsbart er forbundet med hinanden ved hjælp af indgreb mellem en eller flere forbindelsesgaffelgrene (104B) på den første aktueringspille (104) og en eller flere respektive forbindelsesbroer (108B) på den anden aktueringspille (108).

4. Automatisk injektor (100) ifølge krav 3, hvori de en eller flere forbindelsesgaffelgrene (104B) hver har fremspring (104D), som samvirker med langsgående kanaler langs en indre overflade i huset (14,16).

5. Automatisk injektor (100) ifølge krav 4 som yderligere omfatter en eller flere recesser (16D) på husets (14,16) indre overflade, hvori, når forbindelsesgaffelgrenenes (104B) fremspring (104D) samvirker med recesserne (16D), ekspansionen af fremspringene (104D) ind i recesserne (16D) tillader den første aktueringspilles (104) en eller flere forbindelsesgaffelgrene (104B) at frakoble sig fra den anden aktueringspilles (108) en eller flere respektive forbindelsesbroer (108B).

6. Automatisk injektor (100) ifølge ethvert af kravene 1-5, hvori returneringen af den returnerbare nåleenhed (40) lettes af et forspændingselement (270).

7. Automatisk injektor (100) ifølge ethvert af kravene 1-6, hvori stemplet (200) omfatter et forspændingselement (270), hvori forspændingselementet (270) er en fjeder (270), en indre stempeldel (210), en ydre stempeldel (220) og et eller flere låseelementer (227), den indre stempeldel (210) og den ydre stempeldel (220) samvirker for løsbart at bibeholde nævnte forspændingselement (270) i en indledningsvis aktiveret tilstand, og hvori den returnerbare nåleenhed (40) omfatter en kanyle (410) og et nålelegeme (420), som kan indgribe med den indre stempeldel (210).

8. Automatisk injektor (100) ifølge ethvert af kravene 1-7, hvori den første aktueringspille (104) har en eller flere låsekroge (104a), som er placeret ved en proksimal ende af den første aktueringspille (104), og som til at begynde med indgriber med et låseplateau (14B) på en proksimal ende inden i huset (14,16).

9. Automatisk injektor (100) ifølge krav 8, hvori aktiveringsmekanismen (12) kan indgribe med en eller flere af den første aktueringspilles (104) en eller flere låsekroge (104A) for at frakoble låsekrogenes (104A) indgreb med husets (14,16) låseplateau (14B).

10. Fremgangsmåde til samling af den automatiske injektor (100) ifølge ethvert af kravene 1-9, fremgangsmåden omfatter trinnene at:

    (i) komprimere en anden aktueringsfjeder (106) mellem en første aktueringspille (104) og en anden aktueringspille (108), og fastlåse den anden aktueringsfjeder (106) i dens komprimerede, aktiverede tilstand ved løsbart at lade en eller flere forbindelsesgaffelgrene (104B) på den første

aktueringspille (104) indgribe med en eller flere respektive forbindelsesbroer (108B) på den anden aktueringspille (108),

(ii) indsætte en første aktueringsfjeder (102) i et hus (14,16) og komprimere den første aktueringsfjeder (102) mellem huset (14,16) og den første aktueringspille (104) ved løsbart at lade en eller flere låsekroge (104A) på den første aktueringspille (104) indgribe med et låseplateau (14B) på huset (14,16), hvori den første aktueringsfjeder (102) til at begynde med holdes i en komprimeret, aktiveret tilstand i det væsentlige inden i en øvre del af den første aktueringspille (104), og

(iii) indsætte en sprøjteindsats (20), der omfatter et stempel (200) og en nåleenhed (40) i huset (14,16), således at en proksimal ende af stemplet (200) er i kontakt med den anden aktueringspille (108).

11. Fremgangsmåde ifølge krav 10, og som yderligere omfatter trinnet at: fastgøre en aktiveringsmekanisme (12) på huset (14,16), hvori aktiveringsmekanismen (12) er indrettet til at kontakte en eller flere låsekroge (104A) på den første aktueringspille (104) ved aktivering.

12. Fremgangsmåde til at betjene en automatisk injektor (100) ifølge ethvert af kravene 1-9, hvilken fremgangsmåde omfatter trinnene at:

(i) frakoble en eller flere låsekroge (104A) på en første aktueringspille (104) fra et låseplateau (14B) på et hus (14,16), hvori en sådan frakobling tillader en første aktueringsfjeder (102) at ekspandere i det væsentlige langs en langsgående akse af huset (14,16) fra dens indledende aktiverede tilstand;

(ii) frakoble en eller flere forbindelsesgaffelgrene (104B) på den første aktueringspille (104) fra korresponderende forbindelsesbroer (108B) på den anden aktueringspille (108), hvori en sådan frakobling tillader en anden aktueringsfjeder (106) at ekspandere i det væsentlige langs husets (14,16) langående akse fra dens indledende aktiverede tilstand; og

(iii) aktivere en returneringsmekanisme på en sprøjteindsats (20), der omfatter et stempel (200) og en nåleenhed (40), hvori nåleenheden (40) omfatter en returnerbar nål (40), der har en kanyle (410) og et nålelegeme (420) til at returnere den returnerbare nål (40).

13. Fremgangsmåde ifølge krav 12, og som yderligere omfatter trinnene: at betjene den automatiske injektors (100) stempel (200).

14. Fremgangsmåde ifølge krav 12, og som yderligere omfatter trinnet: at åbne en aktiveringsmekanisme (12) og aktivere aktiveringsmekanismen (12) forud for trin (i).

DRAWINGS

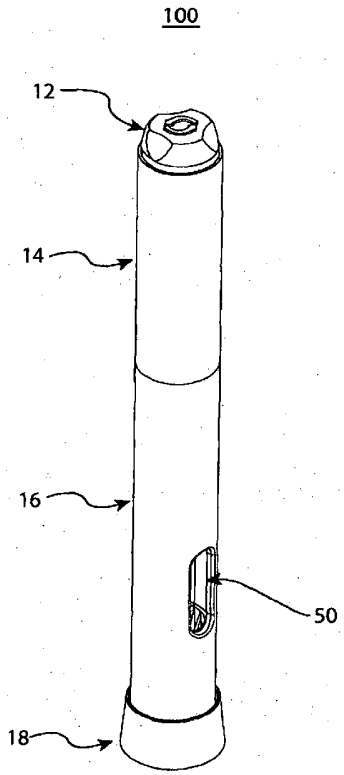

FIG. 1A

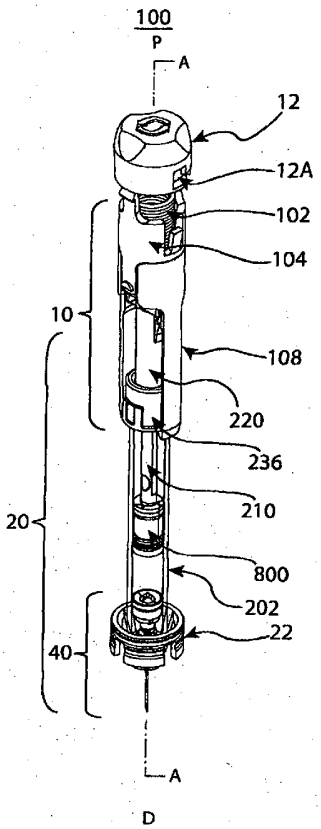

FIG. 1B

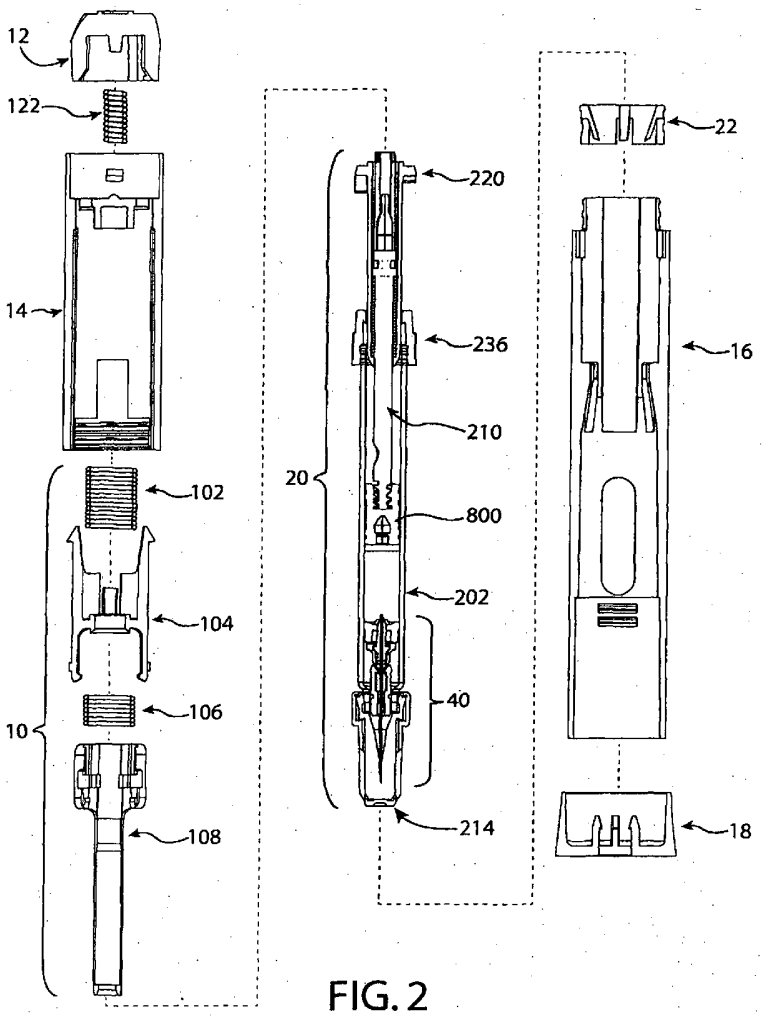

FIG. 2

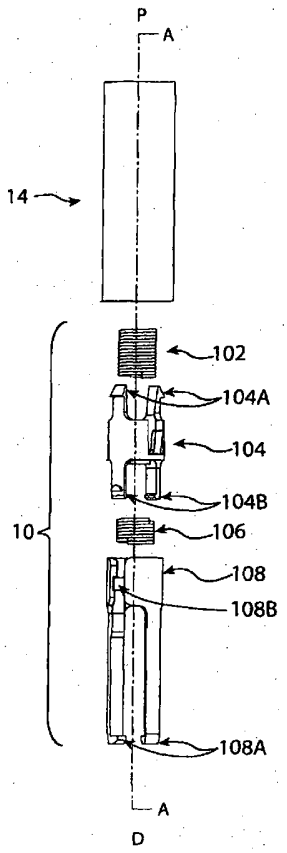
P
A
14
102
104A
104
104B
10
106
108
108B
108A
A
D

FIG. 3A

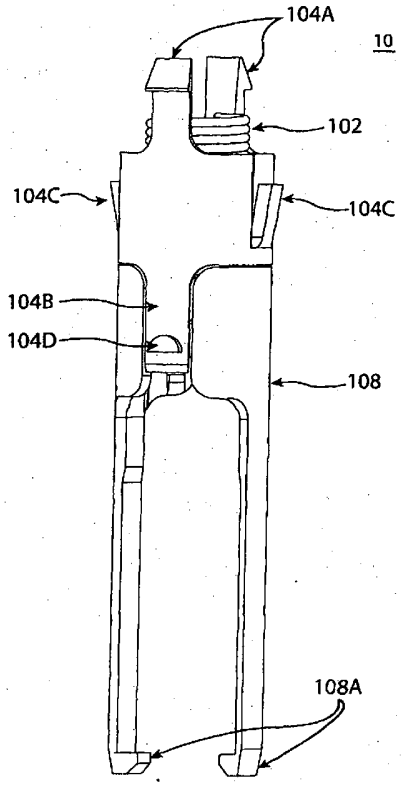
104A
10
102
104C
104C
104B
104D
108
108A

FIG. 3B

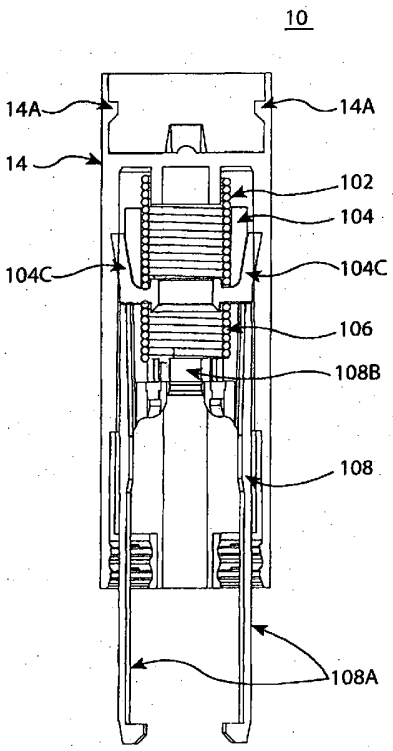
10
14A
14A
14
102
104
104C
104C
106
108B
108
108A

FIG. 3C

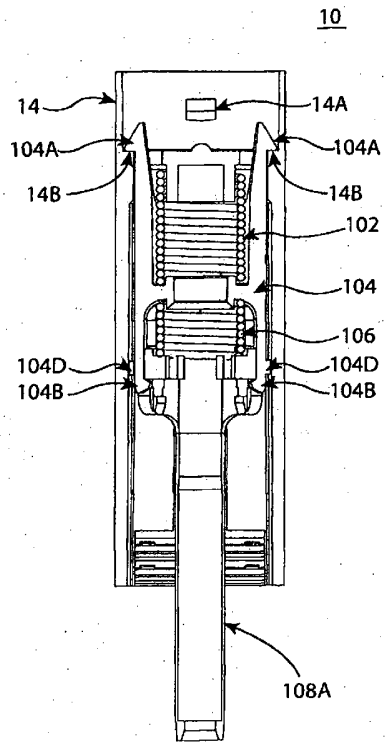
10
14
14A
104A
104A
14B
14B
102
104
106
104D
104D
104B
104B
108A

FIG. 3D

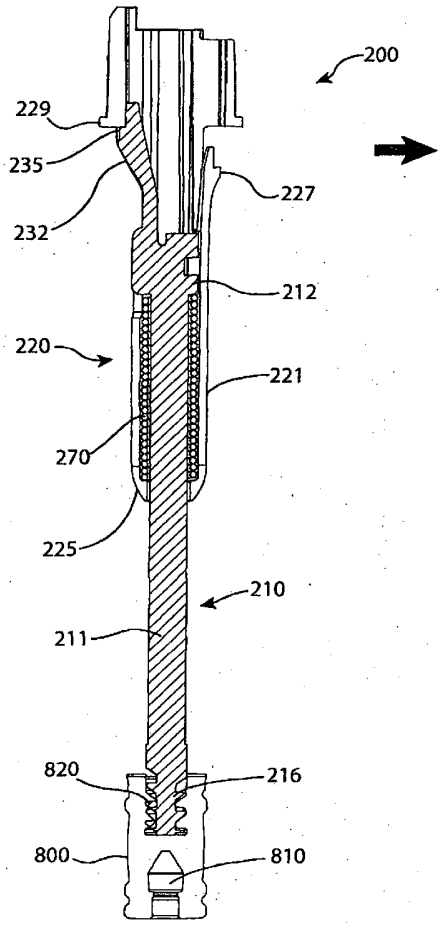

FIG. 4

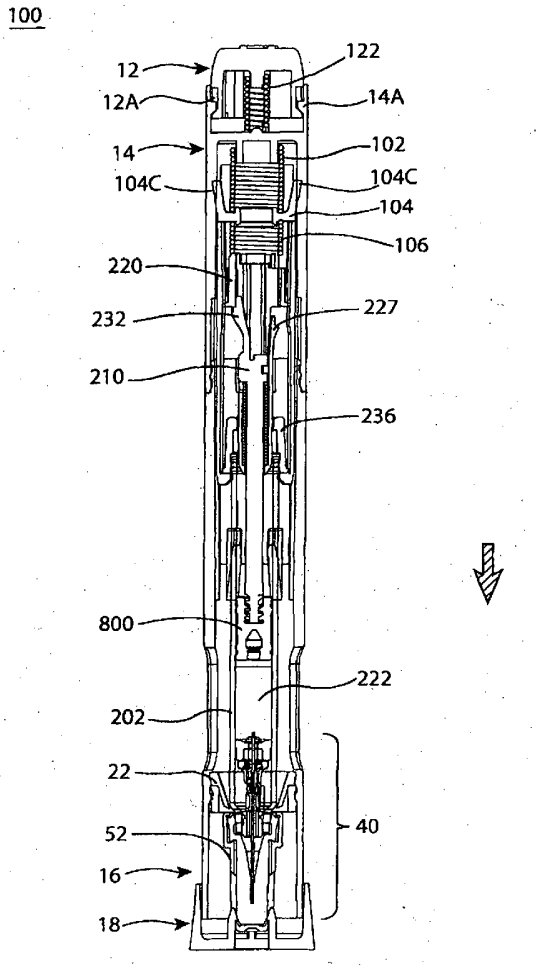
100
12
12A
14
104C
220
232
210
800
202
22
52
16
18
122
14A
102
104C
104
106
227
236
222
40

FIG. 5

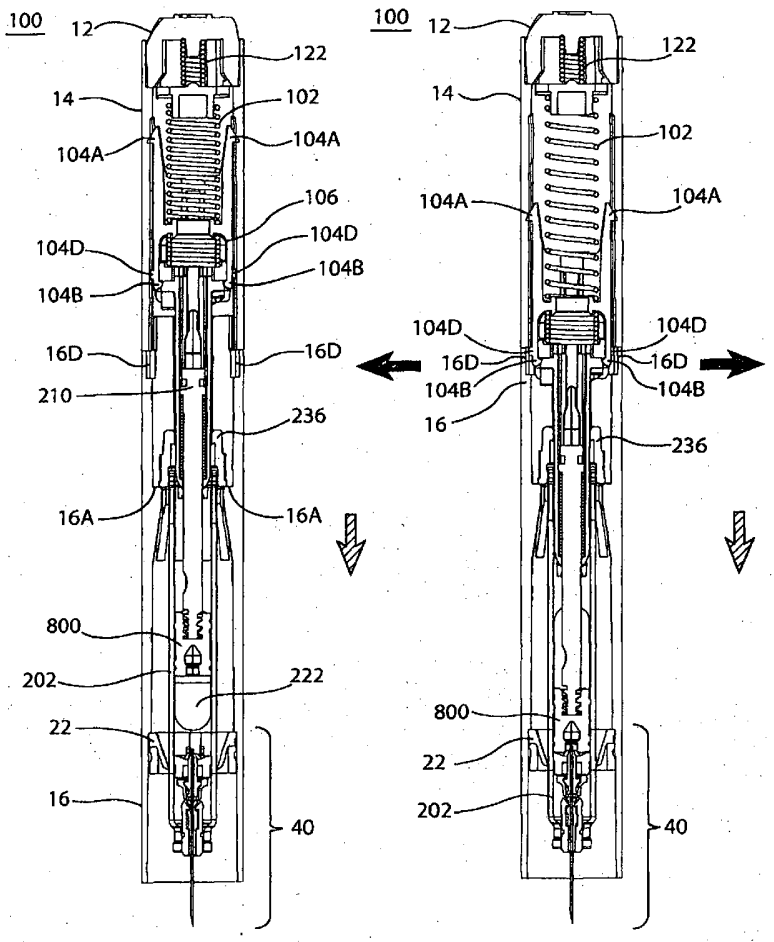
100
12
122
14
102
104A
104A
106
104D
104D
104B
104B
16D
16D
210
236
16A
16A
800
202
222
22
16
40
100
12
122
14
102
104A
104A
104D
104D
16D
16D
104B
104B
16
236
800
22
202
40

FIG. 6A FIG. 6B

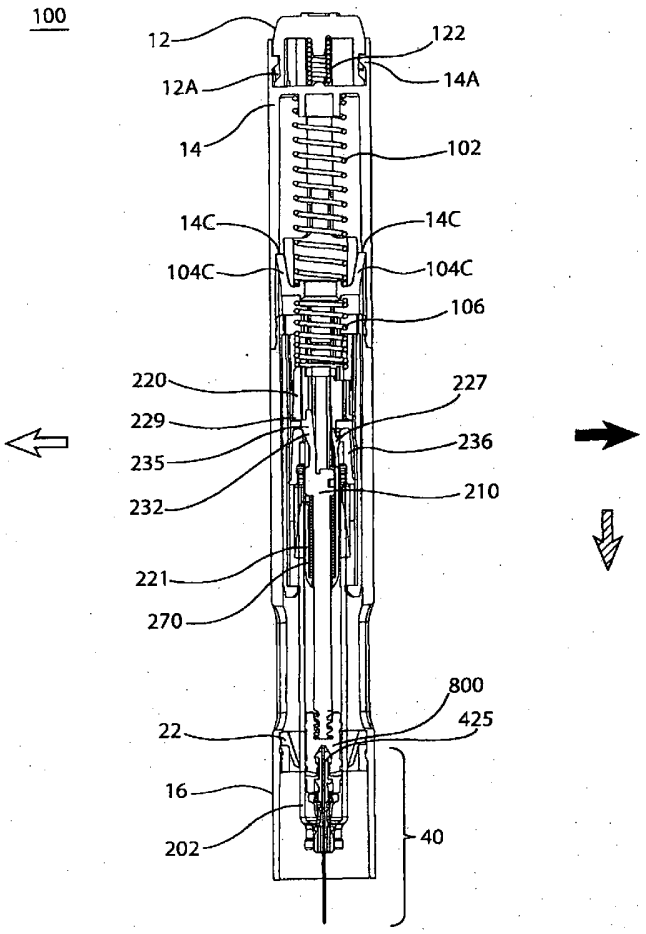
100
12
12A
14
14C
104C
220
229
235
232
221
270
22
16
202
122
14A
102
14C
104C
106
227
236
210
800
425
40

FIG. 7

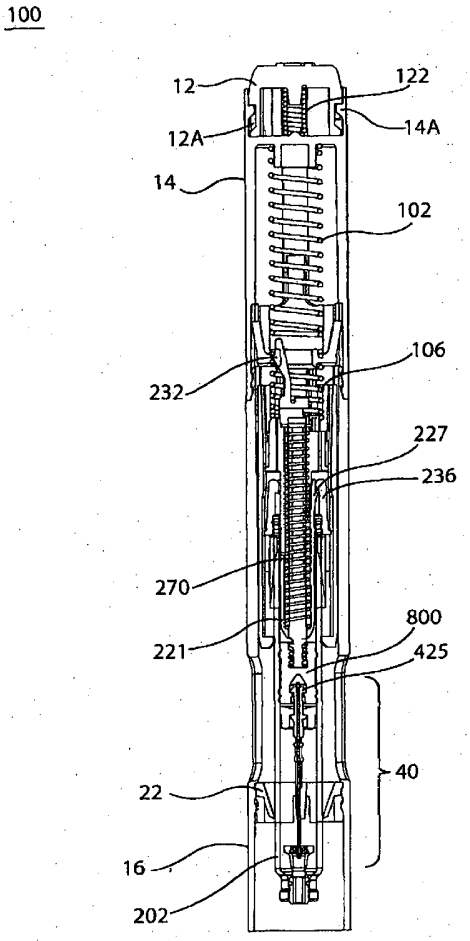
100
12
122
12A
14A
14
102
106
232
227
236
270
800
221
425
40
22
16
202

FIG. 8

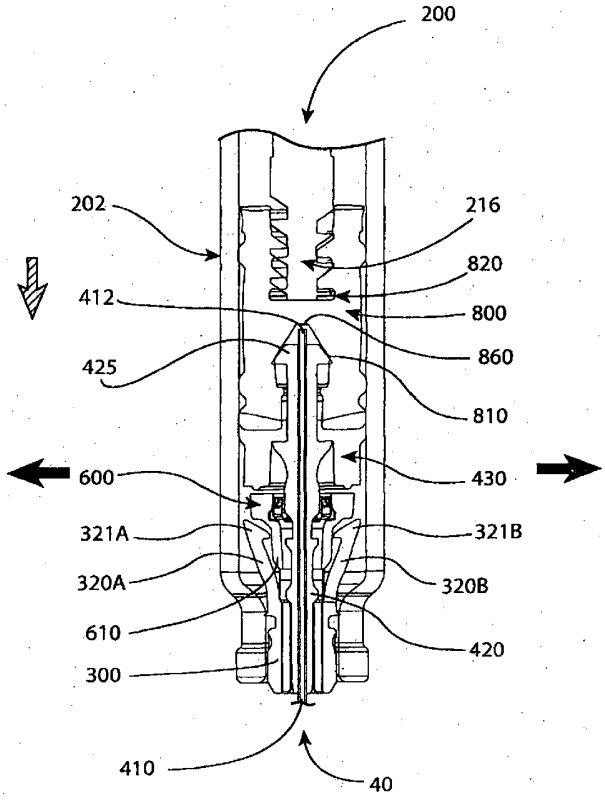
200
202
216
820
412
800
860
425
810
600
430
321A
321B
320A
320B
610
420
300
410
40

FIG. 9

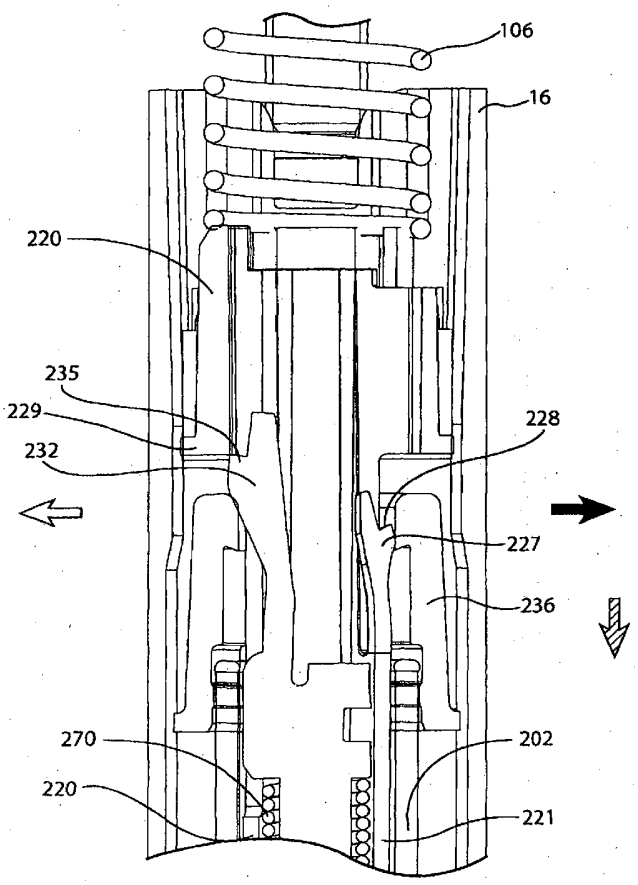

FIG. 10

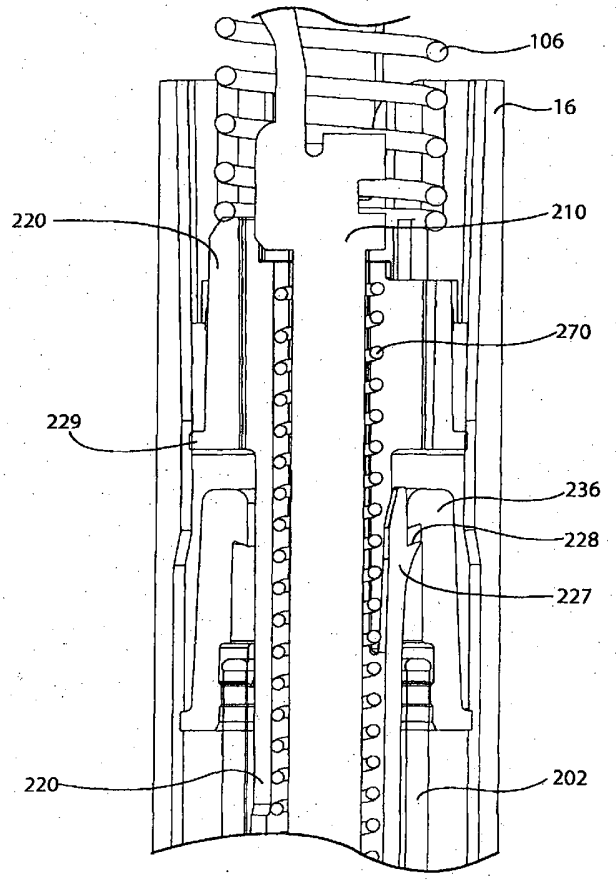

FIG. 11