Aug. 31, 1943. B. B. HOLMES 2,328,214

OXYGEN REGULATOR

Filed Dec. 26, 1940 4 Sheets-Sheet 1

FIG. 1.

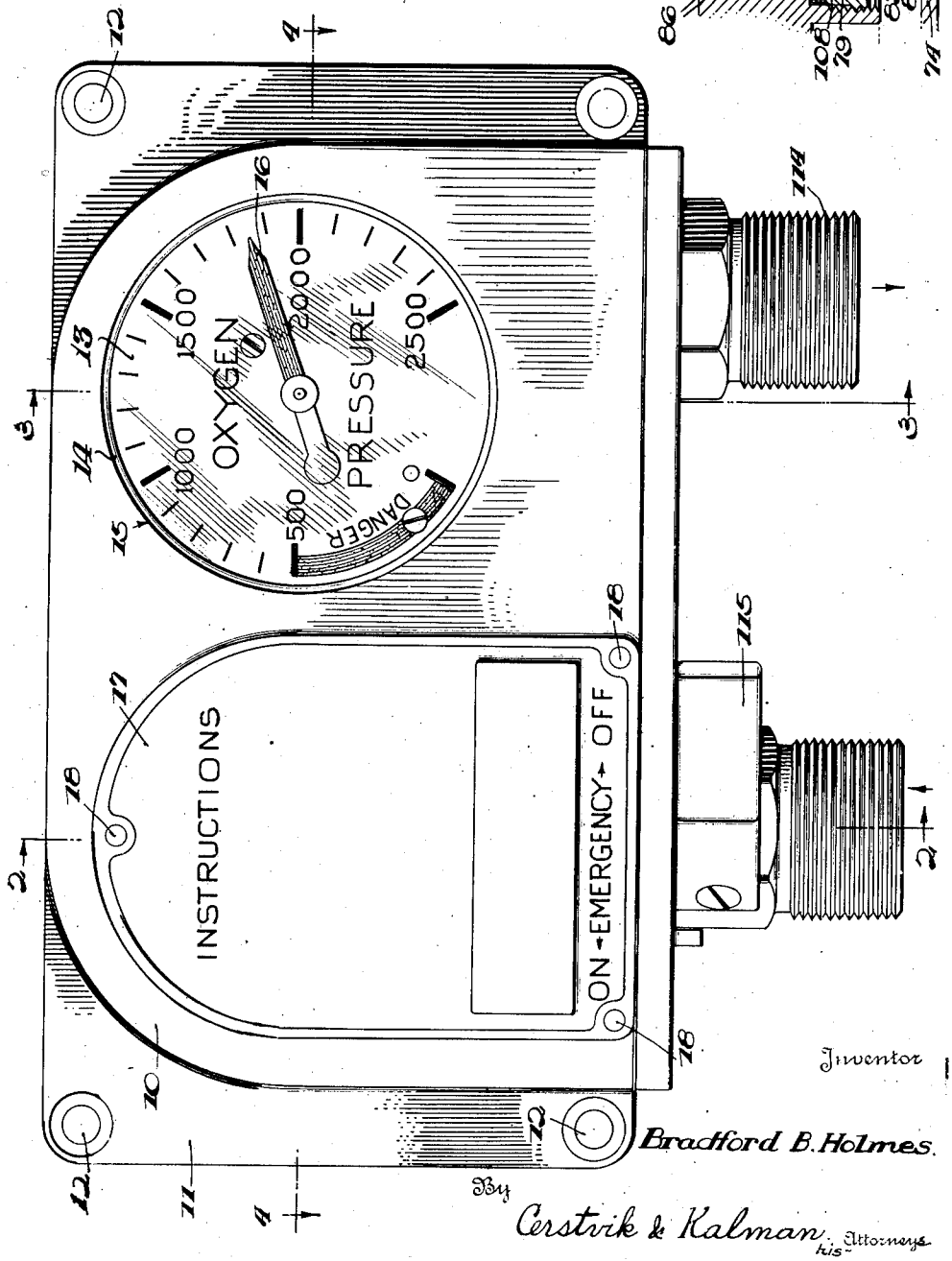

FIG. 6.

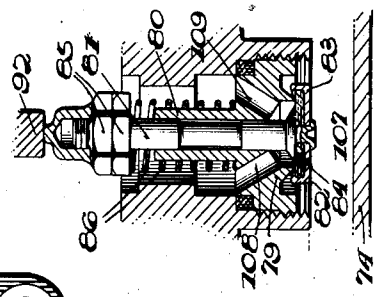

Inventor
Bradford B. Holmes.
By
Cerstvik & Kalman
his Attorneys

Aug. 31, 1943. B. B. HOLMES 2,328,214

OXYGEN REGULATOR

Filed Dec. 26, 1940 4 Sheets-Sheet 2

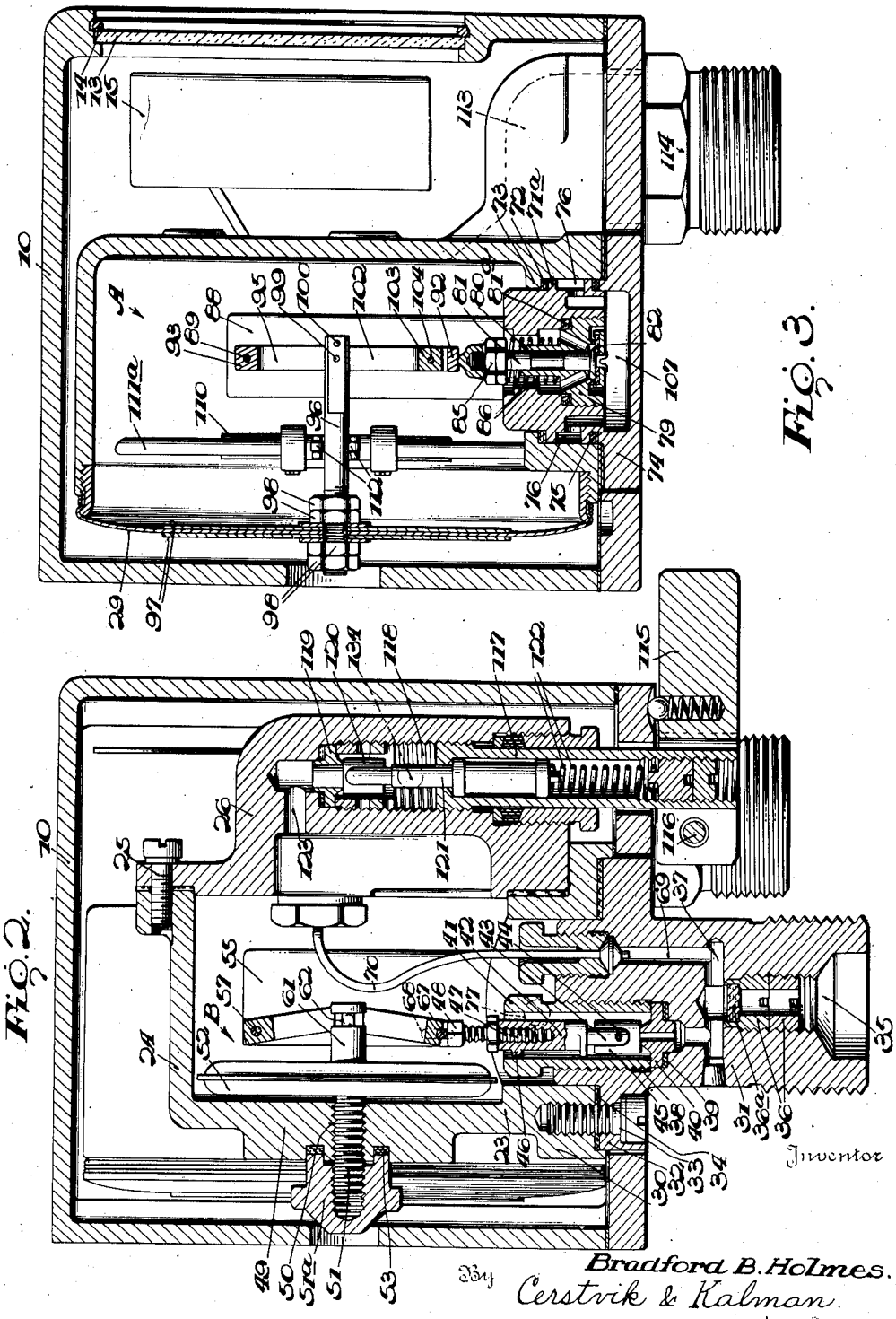

Fig. 3.

Fig. 2.

Inventor

Bradford B. Holmes.

By Cerstvik & Kalman

his Attorneys

Aug. 31, 1943. B. B. HOLMES 2,328,214

OXYGEN REGULATOR

Filed Dec. 26, 1940 4 Sheets-Sheet 3

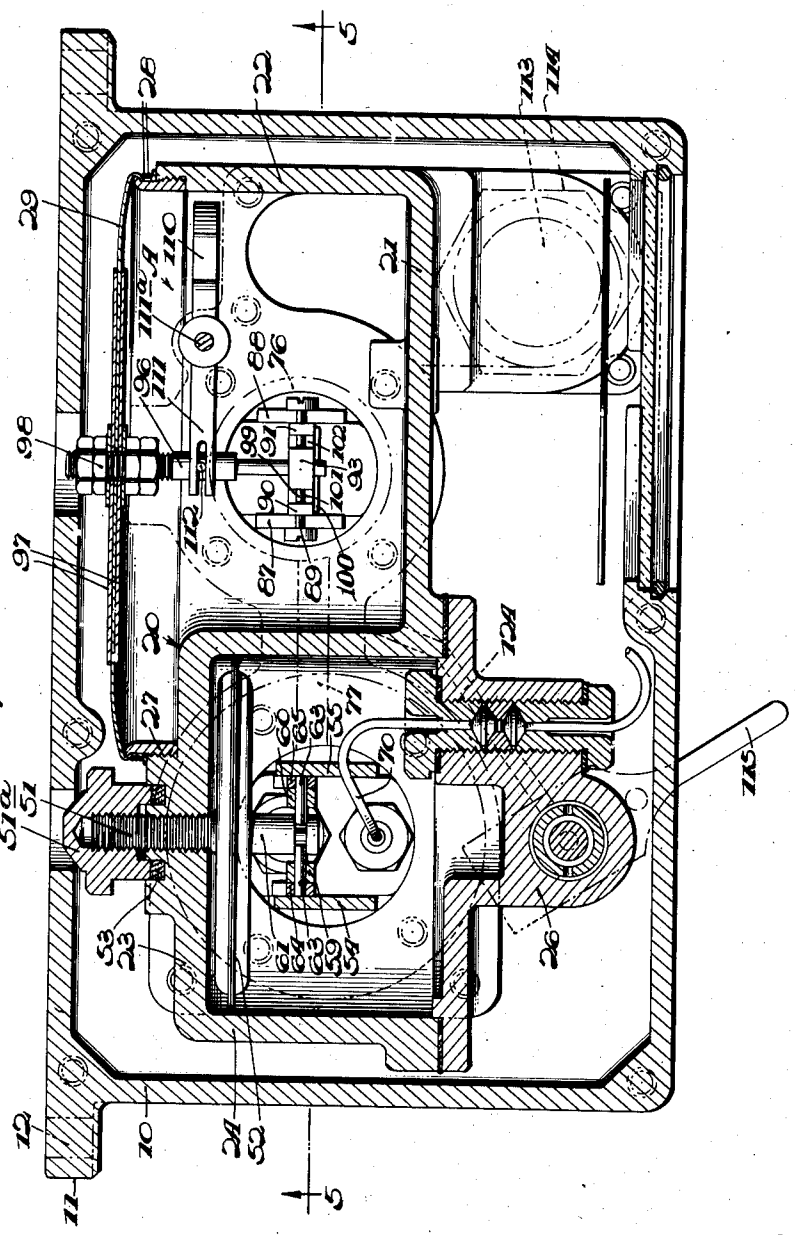

FIG. 4.

Inventor

Bradford B. Holmes

By Cerstvik & Kalman.

his Attorneys

Aug. 31, 1943. B. B. HOLMES 2,328,214

OXYGEN REGULATOR

Filed Dec. 26, 1940 4 Sheets-Sheet 4

FIG. 5.

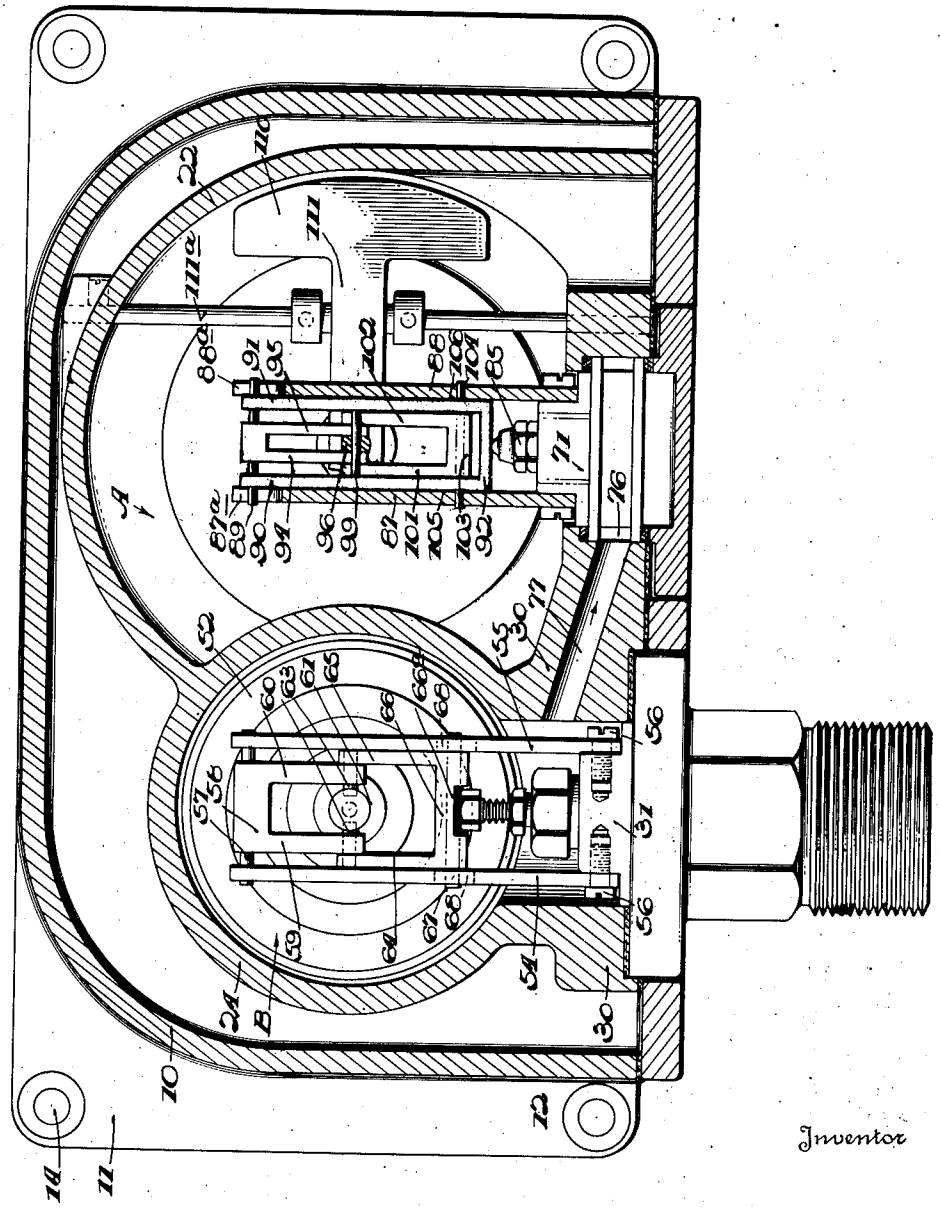

Inventor

Bradford B. Holmes

By

Cerstvik & Kalman his Attorneys

Patented Aug. 31, 1943

2,328,214

UNITED STATES PATENT OFFICE

2,328,214

OXYGEN REGULATOR

Bradford B. Holmes, New York, N. Y., assignor to Bendix Aviation Corporation, Bendix, N. J., a corporation of Delaware

Application December 26, 1940, Serial No. 371,840

8 Claims. (Cl. 128—142)

This invention relates to oxygen regulators generally, and more particularly to oxygen regulators of the demand type.

Oxygen regulators of the type heretofore known and used have been designed to supply a continuous flow of oxygen, which may be increased with altitude either manually or automatically, in accordance with a given specification. The disadvantages encountered with the use of such regulators are that they fail to take into consideration the individual demand of the consumer so that an excessive flow must be provided, whereby approximately two-thirds of the oxygen is wasted. Furthermore, known regulators of the prior art necessitate one or more steps of pressure reduction by some means such as an aneroid valve exposed to the atmosphere and a by-pass valve in the automatic type, or a complicated double gauge in the manual type. Other disadvantages lie in that the oxygen flow provided by these regulators is varied due to temperature effect thereon and the regulator units themselves are complicated, cumbersome, difficult to calibrate and high in manufacturing cost.

An object of the present invention is to overcome the foregoing disadvantages and to provide a novel oxygen regulator wherein the amount of oxygen supplied to the consumer will be in accordance with his individual demand.

Another object of the invention is to provide a novel oxygen supplying means whereby oxygen flow does not depend upon some arbitrary altitude scale heretofore relied upon, but is regulated in accordance with the operator's individual demand.

A further object of the invention is to provide novel automatic oxygen supplying means whereby the oxygen flow is controlled by the consumer's breathing so that he is provided at all times with as much oxygen as he needs or demands in accordance with rate of breathing.

Still another object is to provide a novel automatic oxygen regulator having breath controlled means whereby oxygen flow through the regulator is controlled by the consumer's breathing and the breath controlled means is so sensitive that its functioning is not perceptible to the operator.

A further object is to provide a novel device of the above type whereby the consumer, by using a mouth piece or mask attached to the device and breathing through both the nose and mouth simultaneously, can so regulate his breathing as to get the exact amount of oxygen he requires.

Another object of the invention is to provide a novel oxygen regulator of the type above-mentioned with an adjustable manual control attached for use in case of failure of the automatic portion of the regulator.

Still another object of the present invention is to provide novel sealing means in an oxygen regulator of the above type which respond accurately and readily to extremely small pressures acting thereon, whereby a substantially constant flow of oxygen is provided to the consumer at all times.

A still further object of the invention is to provide a novel oxygen regulator with the use of which there is little or no waste of oxygen.

An additional object of the invention is to provide a novel oxygen regulator of simplified design whereby the weight and cost of manufacture thereof is substantially reduced and at the same time the regulator provides maximum reliability.

The above and other objects and advantages of the invention will appear more fully hereinafter from a consideration of the detailed description which follows, taken together with the accompanying drawings wherein one embodiment of the invention is illustrated. It is to be expressly understood, however, that the drawings are for the purpose of illustration and description only and are not designed as a definition of the limits of the invention, reference being had for this purpose to the appended claims.

In the drawings, wherein like reference characters refer to like parts throughout the several views,

Figure 1 is a front elevation of one form of an oxygen regulator embodying the present invention;

Figure 2 is a view, in section, taken substantially along line 2—2 of Figure 1;

Figure 3 is a view, in section, taken substantially along line 3—3 of Figure 1;

Figure 4 is a longitudinal view, in section, taken substantially along lines 4—4 of Figure 1;

Figure 5 is a longitudinal view, in section, taken substantially along line 5—5 of Figure 4; and

Figure 6 is an enlarged sectional detail view of the novel suction valve of Figure 3.

Referring now to the drawings for a detailed description of the present invention, and more particularly to Figure 1 thereof, one form of oxygen regulator embodying the invention is shown as comprising a suitable housing 10 for mounting the regulator mechanism therein, having a rear

flange plate 11 suitably apertured as at 12 for receiving means for securing the housing to any desired support.

The front of the housing has an opening covered by a suitable transparent window 13 held in place by a split ring 14 presenting to view a pressure gauge 15 having a dial provided with scale means in the well known manner, superimposed on which is a pointer 16 for indicating the pressure of the oxygen at the source such as a tank (not shown). A plate 17 may be further provided at the front of the housing, either formed integrally therewith or secured thereto by means such as screws 18, for containing printed instructions thereon as to the manner of use of the oxygen regulator.

Mounted within the housing 10 and secured to the base plate thereof by suitable means, is a casting generally designated at 20 (Figure 4) which defines substantially two oppositely inverted cylinders A and B, one being greater in diameter than the other, the former being provided with an end wall 21 and a side wall 22, the latter having an end wall 23 and a side wall 24 which is common to both cylinders. Cylinder B has secured thereto at its open end by means such as screws 25, a suitable closure member 26 and the interior of the cylinder thus formed defines a reduction chamber whose purpose will presently appear. The side wall 22 at the open end of cylinder A, on the other hand, is suitably machined so as to receive a circular yoke member 27 which has secured thereto in any desired manner by means such as wire or linen thread 28, a slack diaphragm 29 whereby the cylinder A is completely enclosed and thus defines a suction chamber whose purpose will likewise presently appear.

Cylinder B is provided at its base end with an extended hollow circular flange 30 (Figure 2) defining an annular inlet passage to the interior of the reduction chamber and suitably receives therein a cylindrical valve supporting member 31, having a flange 32 secured by way of means such as bolts 33 to the circular flange 30. Interposed between the flanges 30 and 32 is a gasket 34 whereby a seal-tight closure is effected.

The outer end of the supporting member 31 is threaded for engagement with a suitable oxygen source (not shown) and is further suitably drilled to provide a passage 35 for the oxygen from the source. Hollow bolts 36 may be provided within the passage 35 holding a filter 36*a* and a transverse passage 37 communicates with the latter passage. The opposite end of the member 31 is suitably drilled to define an internally threaded chamber 38 which has resting at the lower end thereof a suitable gasket 39 which supports a passaged valve seat member 40 which may be formed of steel or other suitable material. A threaded hollow guide member 41 screw-threadedly engages within chamber 38 and has its lower end resting upon the outer portion of the valve seat 40. Mounted for slidable movement within the hollow guide member 41 is a plunger 42 having a lug 43 at the end thereof which carries through the intermediary of a suitable pin 44 a valve 45 formed of lucite or other suitable material. Valve 45 is mounted loosely upon the lug 43 so as to admit a limited self-aligning pivotal movement of plunger 42. The latter plunger is provided with extending portions 46 at its outer periphery serving as guide members for the reciprocal movement of plunger 42 within the guide member 41.

The opposite end of plunger 42 has a threaded hollow portion for receiving a bolt 47 therein, the latter having an enlarged head 48 adapted to define a bearing surface for receiving and transmitting closing force upon the valve 45 to force it against its seat 40.

The end wall 23 of cylinder B has formed integrally therewith a boss 49 having a passage 50 for supporting a threaded rod 51 carrying an aneroid or evacuated capsule 52 mounted in and exposed to the pressures within the reduction chamber. Boss 49 is further provided with a recessed portion receiving a suitable gasket or packing 53 and a lock nut 51*a* engaging the rod 51 and resting on the packing 53 to provide an airtight seal.

Novel toggle linkage is now provided within the reduction chamber responding to the operation of the aneroid whereby the valve 45 is opened or closed to permit entrance of oxygen from the source to the reduction chamber. The linkage comprises two spaced apart parallel plates 54 and 55 suitably fastened by means such as screws 56 to the supporting member 31. The free ends of plates 54 and 55 are apertured to receive a transverse connecting rod 57 which pivotally supports a yoke member 58 having arms 59 and 60 (Figure 5).

At its free end, the aneroid 52 supports a rod 61 extending into the reduction chamber and the latter is provided with a groove 62 near its outer end.

The free ends of arms 59 and 60 of yoke member 58 are apertured to receive two pins 63 which engage the groove 62 of aneroid or evacuated capsule rod 61 and connect at their outer ends two arms 64 and 65 of a second yoke member 66 with the arms 59 and 60 of yoke 58. The second yoke 66 is provided with a recessed portion 66*a* for engaging bolt head 48 and has a pin 67 passing therethrough which pivotally supports the yoke 66 within the plates 54 and 55. Slots 68 formed in the plates mount the pin 67 whereby a drop in pressure within the reduction chamber causes aneroid 52 to move outwardly carrying therewith rod 61 and pivotally moving yoke member 58 outwardly as well as yoke 66 due to the fact that pins 63 engage groove 62 and thus follow movement of rod 61. Since yoke member 58 moves outwardly in a minor arc, yoke 66 will be moved not only outwardly but upwardly for which purpose the slots 68 permit upward motion of pin 67.

As pin 67 moves upwardly within slots 68, the yoke member 66 is lifted thereby releasing the pressure on bolt head 48 which normally engages the recess 66*a* of yoke 66 as well as the pin 67 and thereby permits unseating of the valve 45. Oxygen flows from the source by way of passage 35, transverse passage 37, passaged valve seat 40 and about plunger 42 into the reduction chamber. With increased pressure in the chamber the aneroir 52 collapses carrying rod 61 and yoke members 58 and 66 inwardly and the latter yoke downwardly whereby bolt head 48 is moved downwardly to again seat valve 45 and thus close communication with the oxygen source. Yoke members 58 and 66, it will be noted, act generally in the nature of a toggle linkage. The aneroid 52 and the linkage hereinabove described are precisely designed so that a substantially constant pressure will be maintained within the reduction chamber, and this represents substantially an absolute pressure of 15 lbs. per square inch

with a 2200 lb. oxygen tank pressure and about 12 lbs. per square inch with a 100 lb. tank pressure. Without the reduction stage, the suction valve to be presently described, which must shut at 2200 lbs. of oxygen, would be too stiff to operate within the desired limits at low tank pressures.

A passage 69 (Figure 2) in supporting member 31 communicates at one end with transverse passage 37 and at its other end with a conduit 70 which connects the pressure gauge 15 with the oxygen source whereby the operator or consumer at all times will be informed of the amount of oxygen at the supply source as indicated by pointer 16 on the dial.

The side wall 22 of cylinder A is suitably recessed to receive a hollow valve supporting member 71 (Figure 3) provided with an annular abutment 71a having a gasket 72 between it and a related abutment 73 formed in the recessed portion of wall 22. A cap member 74 is pressed into the base plate of the housing and by way of a sealing ring 75 contacts the member 71. An annular groove 76 formed at the outer periphery of member 71 communicates by way of a passage 77 (Figure 5) formed in a portion of flange 30 of cylinder B joining wall 22 of cylinder A to join cylinder A with the reduction chamber formed by cylinder B.

The lower interior portion of member 71 is threaded for receiving a threaded valve seat 79 having a narrow cylindrical portion 80, the valve seat being formed of steel or other suitable material. A suitable gasket 81a affords an air seal between the upper portion of the valve seat 79 and the member 71. The cylindrical portion 80 of the valve seat receives for reciprocal movement therein a plunger 81 which carries at its lower end by suitable means the novel valve 82.

As shown in Figure 6, valve 82 consists of a disc member 83 formed of lucite or other suitable material and supports a smaller disc member 84 thereon which cooperates with the valve seat and is formed of a substance such as neoprene. Valve 82 is designed to respond to suction equivalent to less than ½ inch of water pressure whereby oxygen will flow therethrough. Neoprene has been chosen for the above purpose because it is a relatively soft substance, not affected by the oxygen, and at all times provides a dependable closure free from brittleness and therefore provides longer wear than heretofore afforded by the art.

The free end of plunger 81 carrier nuts 85 thereon and these are normally spaced apart from the edge of the cylindrical portion 80 of the valve seat by means of a coiled spring 86 interposed between the nuts and the valve seat, the latter spring urging valve 82 upwardly against its seat to close communication between chambers A and B. When suction is applied to chamber A, diaphragm 29 acts through a linkage, to be described, to depress plunger 81 and valve 82 from its seat against the action of the spring. Upon building up of pressure in the suction chamber A, diaphragm 29 moves in an opposite direction relieving the force upon plunger 81 and the latter is urged upwardly by way of spring 86 and the valve 82 engages its seat by the additional action of the pressure acting on the underside thereof.

The linkage actuated by the diaphragm 29 for operating the valve 82 comprises a pair of parallel spaced apart plates 87 and 88 (Figure 5), secured at their lower ends by suitable means to the supporting member 71 and having slotted portions 87a and 88a at their free ends for reciprocally receiving a pin 89 passing through arms 90 and 91 of a primary yoke member 92 and pivotally mounting a yoke 93 having arms 94 and 95 adjacent the driving rod 96 carried by the diaphragm. Rod 96 passes through the diaphragm 29 and the latter has a portion thereof interposed between two discs 97 (Figure 4) which are clamped together by way of nuts 98 on rod 96.

Rod 96 is provided with a stop pin 100 at the free end thereof (Figure 3) for a purpose to appear later, and a second pin 99 which at its free ends passes through arms 94 and 95 of yoke 93, arms 101 and 102 of a yoke 103 mounted for pivotal movement about a pin 104, and arms 90 and 91 of primary yoke 92. The arms 90 and 91 of yoke 92 are provided with slots 105 and 106 adjacent their connecting cross member whereby during an outward movement of diaphragm 29, rod 96 is driven outwardly carrying therewith pin 99 which pivots yoke 103 about pin 104, the latter passing through slots 105 and 106 and being journalled in side plates 87 and 88. Yoke 103, therefore, travels through a minor arc and since it is mounted about a stationary pivot, yoke 93 must move about pin 89 both outwardly and downwardly thereby causing arms 90 and 91 of yoke 92 to move downwardly whereby the yoke crosspiece engages nut 85 and the plunger 81 to unseat valve 82 thereby causing oxygen flow from chamber B to chamber A by way of passages 77, 76, chamber 107 and passages 108 and 109 carried by valve seat 79. As soon as oxygen enters chamber A, diaphragm 29 is moved in an opposite direction to lift primary yoke 92 causing valve 82 to close due to the action of the oxygen pressure on the valve disc and the spring 86. As diaphragm 29 moves in its opposite direction and carries rod 96 therewith, stop pin 100 eventually engages arms 90 and 91 of primary yoke 92 whereby the yokes 93 and 103 are prevented from moving in an opposite direction and again unseating valve 82 during the later movement of the diaphragm. Pin 100 therefore serves a precautionary purpose in permitting valve 82 to be unseated only during a suction on diaphragm 29 and prevents valve opening during pressure action on the diaphragm.

A counterweight 110 mounted on arm 111 (Figure 5), pivotally mounted for movement about a rod 111a, engages rod 96 at an intermediate portion thereof through pins 112 carried by the rod for balancing the weight of the diaphragm and linkage so as to avoid position error or effect of acceleration on these parts. Joining chamber A with the outside of the regulator is a passage 113 (Figure 3) which is provided with a hollow bolt 114 whereby a suitable conduit or tube may be secured thereto at one end to supply oxygen to a mouthpiece or mask (not shown) at the other end thereof for the consumer's use.

In operation the consumer adjusts his mouthpiece or mask and as soon as he inhales, suction is applied to the chamber A by way of passage 113 and the reduction in pressure within the chamber actuates diaphragm 29 to move outwardly thereby unseating valve 82 from its seat causing oxygen to flow by way of passages 77, 76, chamber 107 and passages 108 and 109 from the reduction chamber B to the suction chamber A. As oxygen flows from the reduction chamber to the suction chamber, the pressure in chamber B is reduced and aneroid 52 responds to the decreased pressure and moves outwardly. With this movement, pressure on plunger 42 is released

and the oxygen at the source flows through passages 35, 37 and through the valve seat 40 to lift valve 45. Oxygen then flows into the reduction chamber and as soon as a predetermined amount of oxygen is present therein aneroid 52 collapses urging yoke 66 of the linkage to move plunger 42 to seat valve 45.

As pressure in the suction chamber A is built up diaphragm 29 immediately responds thereto to release the force exerted through the linkage upon yoke 92 and the spring 86 in conjunction with the pressures acting upon the lower end of valve 82 urge plunger 81 upwardly to close valve 82 on its seat.

The foregoing action is repeated when the consumer again inhales and depletes the oxygen supply in suction chamber A. The reduced pressure causes diaphragm 29 to unseat valve 82 whereby chambers A and B communicate with each other and oxygen flows from chamber B to A until sufficient oxygen enters suction chamber A to move diaphragm 29 to close valve 82. Due to the depleted supply of oxygen in the reduction chamber B, aneroid 52 actuates valve 45 and oxygen flows into the chamber from the source building up pressure to move the aneroid to again close the valve 45. With this arrangement the operation of the regulator is such as to be imperceptible to the consumer and is highly economical in that little or no oxygen is wasted by it since at all times it supplies only that amount which the individual consumer demands in his breathing.

Should, for any reason, the suction valve 82 fail to operate, an emergency valve is provided adapted for manual operation whereby oxygen from the reduction chamber B can communicate directly with the suction chamber A. The emergency valve comprises a manual lever 115 (Figure 2), having a forked end clamped by way of a bolt 116 about a threaded cylinder 117 mounted within a recess 118 in the closure member 26. The upper portion of the recess 118 is provided with a valve seat 119 with which cooperates a valve 120 carried by a plunger 121 adjustably mounted by way of a spring 122 within the cylinder 117. Spring 122 defines a safety feature in that should lever 115 be turned too much, valve 120 will not be unduly pressed into valve seat 119. Were, for example, the plunger 121 a rigid piece operated directly through lever 115, the valve 120 might be destroyed by too great a turn of the lever. Manual operation of lever 115 unseats valve 120 thereby permitting oxygen flow from the reduction chamber B to chamber A by way of passage 123 in the member 26 (Figure 2) about valve 120 and through a passage 124 (Figure 4). In this manner, even though the valve 82 should have failed, a supply of oxygen will be present in the suction chamber for the consumer's use and the available amount therein will not exceed the amount available in the reduction chamber due to the action of the aneroid 52.

The emergency valve further defines an automatic safety valve for the reduction chamber and may be adjusted, for example, to operate at 40 lbs. of oxygen pressure. In the event that valve 45 should fail and the oxygen attains a pressure of 40 lbs. in the reduction chamber, valve 120 of the emergency device will respond and open to this pressure, communicating the oxygen flow by way of passage 124 to the passage 113 of chamber A and to the atmosphere therefrom.

Since the reduction chamber at all times contains a normal supply of oxygen and need not be designed to accommodate tank pressures, the housing and therefore the regulator will be relatively light in weight which of necessity is a predominant factor for use in aircraft.

Although only one embodiment of the invention has been illustrated and described in detail, it is to be expressly understood that the invention is not limited thereto. Various changes may also be made in the design and arrangement of the parts without departing from the spirit and scope of the invention, as the same will now be understood by those skilled in the art. For a definition of the limits of the invention reference will be had primarily to the appended claims.

What is claimed is:

1. A respiratory apparatus comprising a housing, a casing arranged within said housing and forming a pair of substantially cylindrical members, one of said members defining a pressure reduction chamber and the other of said members defining a breathing chamber, a source of respirant gas under pressure communicating with said reduction chamber, valve means for controlling communication between said reduction chamber and said source, an aneroid mounted within said reduction chamber, a toggle mechanism actuated by said aneroid for opening said valve means when the pressure within said reduction chamber has dropped below a predetermined value and for closing said valve when the pressure attains a predetermined value within said reduction chamber, a passage formed in said casing for communicating said reduction chamber with said breathing chamber, a second valve means for controlling communication between said passage and said breathing chamber, a resilient wall mounted within said breathing chamber and a second toggle mechanism actuated by said wall upon a reduction of pressure within said breathing chamber for opening said last-named valve means to communicate said breathing chamber with said reduction chamber.

2. A respiratory apparatus comprising a housing, means mounted within said housing and forming a pair of inverted cylinders having a common wall, one of said cylinders defining a pressure reduction chamber and the other of said cylinders defining a breathing chamber, a source of respirant gas under pressure communicating with said reduction chamber, valve means for controlling communication between said reduction chamber and said source, an aneroid mounted within said reduction chamber, means actuated by said aneroid for opening said valve means when the pressure within said reduction chamber has dropped below a predetermined value and for closing said valve means when the pressure attains a predetermined value within said reduction chamber, a passage communicating said breathing chamber with said pressure reduction chamber, a second valve means for controlling communication between said chambers, a resilient wall mounted within said breathing chamber, and means actuated by said resilient wall upon a reduction of pressure within said breathing chamber for opening said last-named valve means to communicate said breathing chamber with said reduction chamber.

3. A respiratory apparatus comprising a housing, a casing arranged within said housing and forming a pair of separate chambers, one of said chambers defining a pressure reduction chamber and the other of said chambers defining a breathing chamber, a source of respirant gas under pressure communicating with said reduction chamber, valve means for controlling communi-

cation between said reduction chamber and said source, an aneroid mounted within said reduction chamber, a rod secured for reciprocal movement by said aneroid, a pair of parallel spaced apart plates rigidly mounted within said reduction chamber and adjacent said aneroid, a pair of oppositely arranged yoke members pivotally mounted on said plates and having their free ends engageable by said aneroid rod, one of said yoke members engaging said valve means and adapted for opening said valve means when said aneroid expands to open communication between said source and said reduction chamber, a passage communicating the breathing chamber with said reduction chamber, valve means for controlling communication between said chambers, a flexible wall within said breathing chamber responding to a reduction of pressure within said breathing chamber for opening said last-named valve means to communicate said breathing chamber with said reduction chamber, and a breathing conduit connected to said breathing chamber.

4. A respiratory apparatus comprising a housing, a casing arranged within said housing and forming a pair of adjacent cylindrical members, one of said members defining a pressure reduction chamber and the other of said members defining a breathing chamber, a source of respirant gas under pressure communicating with said reduction chamber, valve means for controlling communication between said reduction chamber and said source, an aneroid mounted within said reduction chamber, a pair of parallel spaced apart plates mounted within said reduction chamber and adjacent said aneroid, a pair of oppositely arranged yoke members pivotally mounted on said plates and having their free ends movable by said aneroid, one of said yoke members normally urging said valve means to a closed position and adapted for releasing said valve means when said aneroid expands to open communication between said source and said reduction chamber, a passage communicating said breathing chamber with said reduction chamber, valve means for controlling communication between said chambers, and a resilient wall within said breathing chamber for opening said last-named valve means to communicate said breathing chamber with said reduction chamber upon a reduction of pressure within said breathing chamber.

5. A respiratory apparatus comprising a housing, a casing arranged within said housing and forming a pair of separate chambers, one of said chambers defining a pressure reduction chamber and the other of said chambers defining a breathing chamber, a source of respirant gas under pressure communicating with said reduction chamber, valve means for controlling communication between said reduction chamber and said source, an aneroid mounted within said reduction chamber, a pair of spaced apart parallel plates mounted within said reduction chamber and adjacent said aneroid, a pair of oppositely arranged yoke members pivotally mounted on said plates and having their free ends movable by said aneroid, one of said yoke members normally urging said valve means to a closed position and adapted for releasing said valve means when said aneroid expands to open communication between said source and said reduction chamber, a passage communicating said breathing chamber with said reduction chamber, valve means for controlling communication between said chambers, a resilient wall within said breathing chamber responsive to a reduction of pressure within said breathing chamber, a pair of spaced apart parallel plates mounted within said breathing chamber and adjacent said wall, and means supported by said last-named plates and actuated by said wall, said means including a relatively movable yoke member normally urging said last-named valve means to a closed position and adapted for releasing said last-named valve means to open communication between said chambers, upon a reduction of pressure within said breathing chamber.

6. A respiratory apparatus comprising a housing, a casing arranged within said housing and forming a pair of inverted cylinders having a common wall, one of said cylinders defining a pressure reduction chamber and the other of said cylinders defining a breathing chamber, a source of respirant gas under pressure communicating with said reduction chamber, valve means for controlling communication between said reduction chamber and said source, an aneroid mounted within said reduction chamber, a pair of spaced apart parallel plates mounted within said reduction chamber and adjacent said aneroid, a pair of oppositely arranged yoke members pivotally mounted on said plates and having their free ends movable by said aneroid, one of said yoke members normally urging said valve means to a closed position and adapted for releasing said valve means when said aneroid expands to open communication between said source and said reduction chamber, a passage communicating said breathing chamber with said reduction chamber, valve means for controlling communication between said chambers, a flexible wall within said breathing chamber responsive to a reduction of pressure within said breathing chamber, a pair of spaced apart parallel plates mounted within said breathing chamber and adjacent said flexible wall, a yoke element slidably supported within said last-named plates and normally urging said last-named valve means to a closed position, and a pair of yoke members pivotally mounted on said last-named plates and having their free ends movable by said flexible wall whereby said yoke element is actuated to release said last-named valve means to open communication between said chambers upon a reduction in pressure within said breathing chamber.

7. A respiratory apparatus comprising a housing, a casing arranged within said housing and forming a pair of inverted cylinders having a common wall, one of said cylinders defining a pressure reduction chamber and the other of said cylinders defining a breathing chamber, a source of respirant gas under pressure communicating with said reduction chamber, valve means for controlling communication between said reduction chamber and said source, an aneroid mounted within said reduction chamber, a pair of spaced apart parallel plates mounted within said reduction chamber and adjacent said aneroid, a pair of oppositely arranged yoke members pivotally mounted on said plates and having their free ends movable by said aneroid, one of said yoke members normally urging said valve means to a closed position and adapted for releasing said valve means when said aneroid expands to open communication between said source and said reduction chamber, a passage communicating said breathing chamber with said pressure reduction chamber, valve means for controlling communication between said chambers, a resilient wall within said breathing chamber for opening said

last-named valve means to communicate said breathing chamber with said reduction chamber upon a reduction in pressure within said breathing chamber, and an emergency device for bypassing gas from the reduction chamber to the breathing chamber independently of said last-named valve means, said device further acting as a safety valve for releasing gas from said reduction chamber when the gas therein exceeds a predetermined pressure.

8. A respiratory aparatus comprising a housing, a casing arranged within said housing and forming a pair of inverted cylinders having a common wall, one of said cylinders defining a pressure reduction chamber and the other defining a breathing chamber, a source of respirant gas under pressure communicating with said reduction chamber, valve means for controlling communication between said reduction chamber and said source, an aneroid mounted within said reduction chamber, a pair of spaced apart parallel plates mounted within said reduction chamber and adjacent said aneroid, a pair of oppositely arranged yoke members pivotally mounted on said plates and having their free ends movable by said aneroid, one of said yoke members normally urging said valve means to a closed position and adapted for releasing said valve means when said aneroid expands to open communication between said source and said reduction chamber, a passage communicating said breathing chamber with said reduction chamber, valve means for controlling communication between said chambers comprising a stationary valve seat, a neoprene disc for engaging said seat, a resiliently urged plunger normally urging said disc against said seat, and a resilient wall responding to a reduction of pressure within said breathing chamber for actuating said plunger and unseating said valve disc from said seat to open communication between said chambers.

BRADFORD B. HOLMES.