C. SCHIFFERLE.

APPARATUS FOR SEPARATING MATERIALS OF DIFFERENT SPECIFIC GRAVITIES.

APPLICATION FILED MAR. 14, 1918.

1,381,596. **Patented June 14, 1921.**

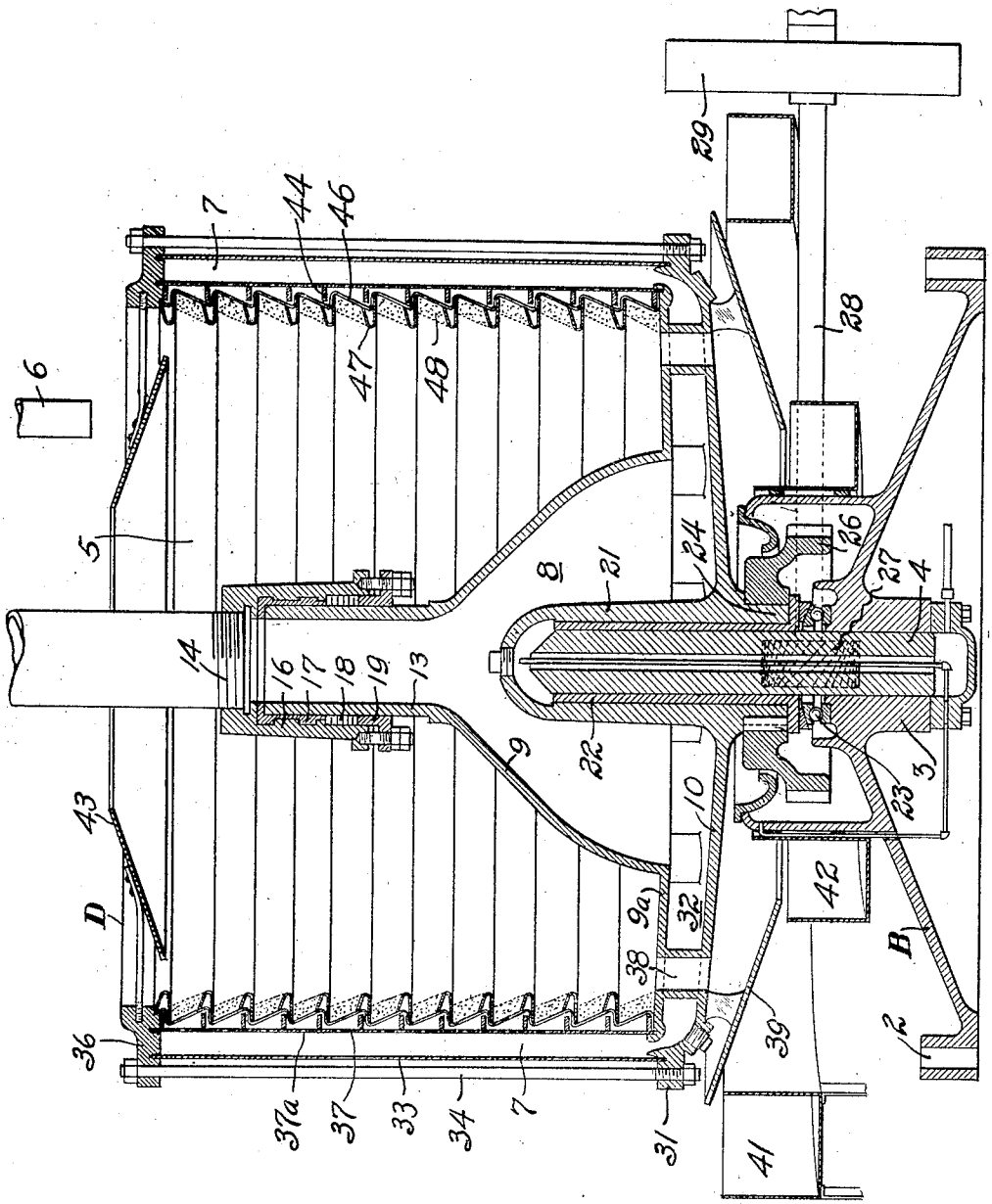

Witness
C. S. Evans

INVENTOR
Charles Schifferle
BY White & Frost
his ATTORNEY

UNITED STATES PATENT OFFICE.

CHARLES SCHIFFERLE, OF MARYSVILLE, CALIFORNIA.

APPARATUS FOR SEPARATING MATERIALS OF DIFFERENT SPECIFIC GRAVITIES.

1,381,596. Specification of Letters Patent. Patented June 14, 1921.

Application filed March 14, 1918. Serial No. 222,347.

To all whom it may concern:

Be it known that I, CHARLES SCHIFFERLE, a citizen of the United States and a resident of Marysville, county of Yuba, and State of California, have invented a new and useful Apparatus for Separating Materials of Different Specific Gravities, of which the following is a specification.

My invention relates to an apparatus for recovering from finely crushed ores, their valuable mineral content.

An object of my invention is to provide a method of separating materials of different specific gravities by subjecting materials under the influence of centrifugal force to an opposed flow of fluid, preferably air, under pressure.

Another object of the invention is to provide an apparatus in which the materials to be separated are held in a mobile or substantially fluid condition by a diffused flow of fluid, preferably air, while being acted on by centrifugal force.

Another object of the invention is to provide an apparatus of the character described in which the ground ore is fed into the top of the machine and the tailings and concentrates discharged by gravital action at the bottom of the machine.

Another object of the invention is to provide an apparatus of the character described in which is incorporated means for forcing air under pressure into the material being treated to maintain it in a mobile or substantially fluid condition.

The invention possesses other objects and advantages some of which, with the foregoing, will be set forth in the following description of the preferred form of my invention which is illustrated in the drawings accompanying and forming part of the specification. It is to be understood that I do not limit myself to the showing made by the said drawings and description, as I may adopt variations of the preferred form within the scope of my invention as set forth in the claims.

In the concentrator of my invention, the dry finely ground ore is subjected to the action of centrifugal force while passing downwardly through the apparatus and at the same time is kept in a substantially fluid or mobile condition by a current of air passing through the mass in a direction opposed to the movement of the materials under the influence of centrifugal force, so that the particles of greater specific gravity which represent the values may pass through and displace the particles of lesser specific gravity. The latter as tailings are permitted to pass downwardly slowly under the pull of gravitation and discharge from the machine, while the former collect in the machine during the rotation of the containing drum and may be removed by stopping the drum, whereupon they also will pass downwardly out of the drum under gravital pull.

The figure in the drawings is a vertical section taken through the axis of the machine.

The apparatus comprises a base B provided with holes 2 through which project the studs which secure the base to a suitable foundation. In the center of the base is a boss 3 in which is fixed a hollow stud 4, and arranged to rotate upon the stud is the circular drum designated generally by the letter D. Essentially the drum consists of a double receptacle or annular casing, the inner chamber 5 of which is adapted to receive from the feed spout 6 the materials to be treated, and the outer chamber 7 of which is adapted to receive fluid, preferably air under pressure which is introduced into the material to keep it mobile, so that under the influence of centrifugal force engendered by the rotation of the drum, the values are concentrated upon the wall of the inner receptacle.

The drum D comprises a main casting generally circular in plan and horizontal section and substantially of the vertical section shown in the figure. A central chamber 8 is inclosed by the bell-formed wall or casing 9 and bottom wall 10 of the casting, and fluid, preferably air, under pressure enters this chamber through the neck 13, formed by the upward extension of the casing 9. A fluid tight rotatable connection is provided between the neck 13 and the end 14 of the air supply pipe. This connection consists of a stuffing box 16, having a babbitt lining 17, and packing 18 compressed by the gland 19.

Formed upon the bottom wall 10 and projecting into the chamber 8 is a hollow journal or socket 21 in which the stud 4 seats. A bronze bearing bushing 22 is disposed between the hollow-journal and the stud-bearing, and a ball thrust bearing 23 of suitable design to take the load of the rotating drum and contents is disposed between the flanged end of

the bushing and the upper face of the boss 3. Means are provided for rotating the drum. On the flange 24 projecting from the bottom wall 10 and surrounding the end of the bushing 22, is suitably fixed a worm gear 26. In mesh with this gear is a worm 27 fixed on the shaft 28 and driven by the pulley 29 from any suitable source of power. The bottom wall 10 is extended outwardly and the edge given an upward turn, and provided on the outside with a flange or lip 31. The casing 9 is also extended outwardly by the annular flange or wall 9^a which thus forms with the wall 10 a horizontal annular passage 32 which is really an extension of chamber 8. A steel plate cylindrical shell 33 is seated in an annular groove in the flange 31 and securely held therein by rod bolts 34 passing through the flange 31 and through a clamp ring 36 disposed on the top edge of the shell. A second cylindrical shell 37 provided with apertures 37^a and spaced from the shell 33 is disposed between the clamp ring 36 and the outer edge of the wall 9^a. This shell, like the shell 33, is seated in annular grooves and rigidly held in position by the rod bolts 34. The two shells thus form a casing inclosing the annular outer chamber 7 which is in communication with the central chamber 8 through the passage 32; and the shell 37 and the walls 9 and 9^a form an inner chamber 5 for the reception of the materials to be treated.

Spaced about the bottom of chamber 5 at suitable intervals are passages 38 discharging upon the annular conical plate 39 lying below and secured to the bottom wall 10. Both tailings and concentrates are discharged through these passages from the drum, although of course at different times. The tailings discharging during the rotation of the drum are thrown outwardly from the outer edge of the plate 39 and are conveyed away from the machine in the launder 41, annularly disposed about the base of the machine; while the concentrates, discharged only when the drum has come to rest, or nearly so, are deflected by the plate 39 and run downwardly into the launder 42 in which they are conveyed away from the machine. Adjacent the top of the drum in the chamber 5 and suitably secured to the clamp ring 36 is an annular conical plate 43 upon which the materials from the feed pipe 6 discharge. Upon striking the plate 43, the materials are thrown outwardly against the wall of the chamber 5 and begin the downward journey through the machine, during which the concentration of values takes place. It will be understood that since the course of the material through the drum is downward, no power is expended in raising the materials from the bottom upwardly, which is the common practice. In operation, therefore, my machine requires only sufficient power to maintain the desired speed of rotation.

Means are provided upon the aperture wall 37 for delaying the downward movement of the ore and facilitating the concentration of the valuable particles. Spaced vertically from each other at suitable intervals about the wall are annular rings 44, and a filter cloth 46 is disposed upon these rings. By means of annular retaining rings 47 sprung into position the filter cloth is tucked under each ring 44, sloping inwardly (toward the axis of the drum) and downwardly to the inner edge of the next ring 44 below. The retaining rings 47 form riffles or ledges upon which the material 48 collects in its downward movement, and the slope of the filter cloth is substantially parallel to the angle of repose of the material on the riffles at the determined speed of the drum, so that the mass of material between any two riffles is of substantially equal depth.

The fluid, preferably air, for maintaining the materials upon the filter cloth in a mobile state, is introduced under the desired pressure into the chamber 8 through the neck 13. From chamber 8 it flows through passage 32 into the annular chamber 7, the pressure at which it is introduced being augmented by centrifugal force. From the chamber 7, the air passes through the apertured wall or shell 37 and the filter cloth 46 into the mass of finely divided ore, preventing it from packing and keeping it in a substantially fluid or mobile condition so that the heavier particles under the influence of centrifugal force gradually pass outwardly and collect upon the filter cloth displacing the lighter particles which therefore pass inwardly (toward the axis of rotation). The pressure of the air and the speed of rotation of the drum are carefully determined so that the introduction of the air into the fine ore will not blow the finer particles out of the mass. The filter cloth also assists in this by diffusing the air evenly over the entire mass of material.

With the accession of material from the feed pipe 6, the material builds up upon the filter cloth, the tendency being downward on account of the cylindrical form of the shell 37 and the pull of gravitation. As soon as the material upon one riffle has built up to the angle of repose, the additional material falls upon the next riffle below, the heavier particles constantly displacing the lighter, which are forced inwardly toward the center of rotation. Finally a discharge of light particles begins to take place through the passages 38 and these tailings are thrown out into the launder 41 where they are carried away by a stream of water passing therethrough or by other appropriate means.

When a sufficient depth of concentrates has been built up upon the filter cloth, the drum is stopped, whereupon much of the material between the riffles falls to the bottom of the chamber and through the passages 38 upon the plate 39 and from thence into the launder 42. Concentrates remaining in the chamber 5 may be removed by flushing it out with water or by other appropriate means.

I claim:

1. In an apparatus of the character described, a rotatable drum comprising a chamber having a cylindrical lateral upright wall, a filter cloth disposed upon said wall, annular rings disposed upon said filter cloth to form riffles on said wall, means for feeding material to be treated against the upper portion of said wall to move downwardly thereon, and means for supplying fluid under pressure against said filter cloth.

2. In an apparatus of the character described, a rotatable drum comprising a chamber having a cylindrical lateral wall, annular rings forming ledges arranged on said wall, a filter cloth disposed upon said wall and sloping inwardly and downwardly from the under side of each ledge to the inner edge of the next lower ledge, riffles disposed on said filter cloth at each inner annular edge thereof, means for feeding material to be treated upon the uppermost riffle and means for supplying fluid under pressure against said filter cloth.

3. In an apparatus of the character described, a rotatable drum comprising a chamber having a cylindrical lateral wall, annular rings forming ledges arranged on said wall, a filter cloth disposed upon said wall and sloping inwardly and downwardly from the under side of each ledge to the inner edge of the next lower ledge, retaining rings for said filter cloth forming annular riffles arranged at each inner annular edge thereof, means for feeding material to be treated upon the upper portion of said filter cloth and means for supplying fluid under pressure against said filter cloth.

4. In an apparatus of the character described, a rotatable drum comprising a chamber having a cylindrical lateral wall, riffles disposed on said wall, means for feeding material to be treated to the upper portion of said wall, means for introducing fluid under pressure into said material to maintain it in a substantially fluid state, means for accumulating the values from said material upon the wall of said chamber, means for permitting the centrifugal discharge of tailings from the bottom of said drum, and means for collecting the values between said riffles.

5. In an apparatus of the character described, a rotatable drum comprising a chamber for the reception of materials to be treated, means for rotating said drum, means for feeding materials into the top of said chamber against the lateral wall thereof, means for permitting a gradual downward movement of said material under gravital influence, means for flowing fluid through the materials in a direction opposite to that of the centrifugal force of said rotation, and means for accumulating the values from said material between said riffles.

6. In an apparatus of the character described, a rotatable drum comprising a chamber for the reception of materials to be treated, means for rotating said drum to subject said materials to the action of centrifugal force, means for feeding said materials into the top of said chamber against the lateral wall thereof, means for accumulating said particles of greater specific gravity on the walls of said chamber, means permitting the discharge of said material at the bottom of said chamber, and means for introducing fluid into said material to maintain it in a substantially fluid state.

7. In an apparatus of the character described, a rotatable drum comprising a chamber having a continuous lateral wall for the reception of materials to be treated, riffles disposed on said wall, means for rotating said drum to subject said materials to the action of centrifugal force, means for feeding said materials into the top of said chamber against the lateral wall thereof, means for introducing fluid into said material to maintain it in a mobile condition, whereby the particles of material of greater specific gravity move outwardly to displace the particles of lesser specific gravity, and means for permitting a gradual downward movement of said material under gravital influence, and means for collecting the values from said material between said riffles.

8. In an apparatus of the character described, a rotatable drum comprising a chamber for the reception of materials to be treated, means for rotating said drum to subject said materials to the action of centrifugal force, means for feeding said materials into the top of said chamber against the lateral wall thereof, means for introducing fluid into said material to maintain it in a mobile condition, whereby the particles of material of greater specific gravity move outwardly to displace the particles of lesser specific gravity, means for permitting a gradual downward movement of said material under gravital influence, means for collecting said particles of greater specific gravity on the walls of said chamber, and means for effecting the centrifugal discharge of said particles of lesser specific gravity from the bottom of said chamber.

9. In an apparatus of the character described, a vertical rotatable drum compris-

ing a chamber for the reception of materials to be treated, means for rotating said drum to subject said materials to the action of centrifugal force, means for retaining concentrates against gravital flow while the drum is rotating, means for feeding said materials into the top of said chamber against the lateral wall thereof, means for introducing fluid into said concentrated material to maintain it in a mobile condition, whereby the particles of material of greater specific gravity move outwardly to displace the particles of lesser specific gravity, means for permitting a gradual downward movement of said lesser specific gravity material under gravital influence, and means for effecting the centrifugal discharge of said particles of lesser specific gravity from the bottom of said chamber, when said drum is revolving, and the gravital discharge of said particles of greater specific gravity from the bottom of said chamber when said drum is at rest.

10. In an apparatus of the character described, a drum comprising a circular bottom wall, an annular wall of less diameter than said bottom wall spaced therefrom and substantially parallel thereto, a bell-form casing integral with said annular wall on its inner edge, an annular ring spaced above said bottom and annular walls, a pair of concentric shells having their upper edges seated in said annular ring, the lower edge of one of said shells being seated in said bottom wall and the lower edge of the shell being seated in said annular wall, discharge passages through said annular and bottom walls, a conical annular plate underlying said discharge passages, means for feeding material into the upper portion of said drum, and means for revolving said drum.

11. In an apparatus of the character described, a drum comprising an upright cylindrical casing inclosing a cylindrical inner chamber, means for introducing fluid under pressure into said casing, means for introducing material to be treated into the top of said inner chamber, means for rotating said drum to subject said material to the action of centrifugal force, recess-forming means for permitting a gradual downward movement of said material under gravital influence, means for admitting into said material a diffused flow of fluid from said casing whereby the particles of material of greater specific gravity move outwardly to displace the particles of lesser specific gravity, means for accumulating said particles of greater specific gravity in said inner chamber, and means for permitting the gravital and centrifugal discharge of said particles of lesser specific gravity from said drum.

12. A mineral concentrator, comprising a vertical rotatable drum having an inner porous wall spaced from the outer casing to form an annular air chamber, means to facilitate the collection of the concentrates on the wall, means for discharging pulp centrifugally against the upper inner surface of the wall so that it will gravitate downward thereover, means for supplying compressed air to the air chamber to pass inwardly generally and diffused through the pulp solids on the wall while the drum is rotating to dislodge the parts of lesser specific gravity, and means at the bottom of the drum for discharging the tailings while the drum is rotating.

In testimony whereof, I have hereunto set my hand at Martinez, California, this 7th day of March 1918.

CHARLES SCHIFFERLE.

In presence of—
C. H. HAYDEN.