July 4, 1950 R. SCHNEIDER 2,513,821

VACUUM TUBE PULLER

Filed March 17, 1948

FIG. 1

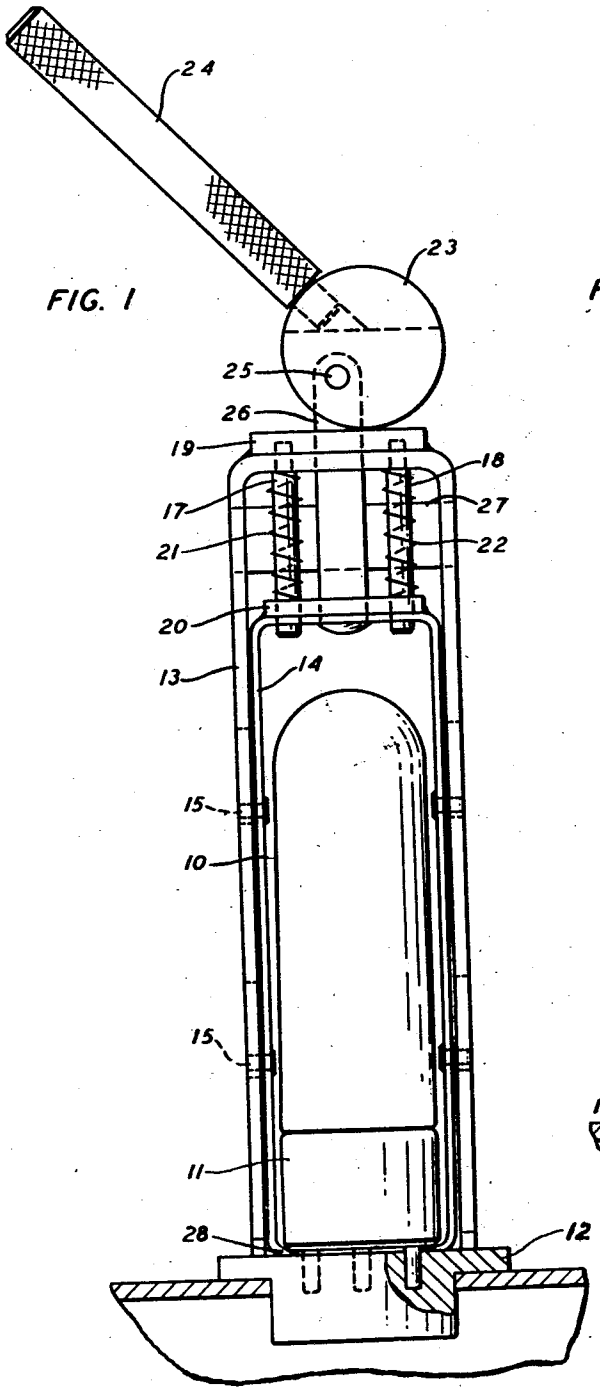

FIG. 2

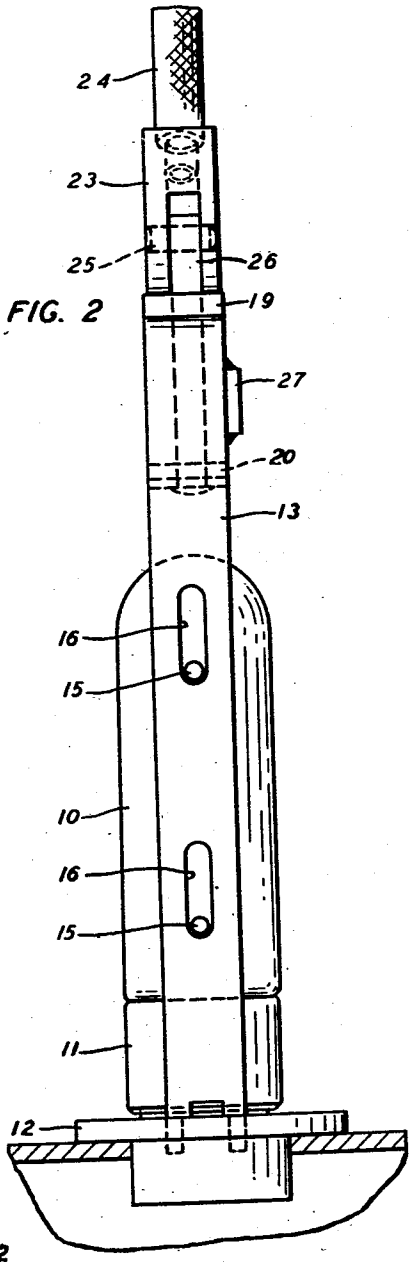

INVENTOR
R. SCHNEIDER
BY C. B. Hamilton
ATTORNEY

Patented July 4, 1950 2,513,821

UNITED STATES PATENT OFFICE

2,513,821

VACUUM TUBE PULLER

Robert Schneider, Greensboro, N. C., assignor to Western Electric Company, Incorporated, New York, N. Y., a corporation of New York

Application March 17, 1948, Serial No. 15,377

11 Claims. (Cl. 254—131)

1

This invention relates to vacuum tube pullers, and more particularly to a lifting tool designed to be used in removing radio vacuum tubes from their sockets.

In removing radio tubes from their sockets in an assembled chassis, the direct manual extraction of such tubes from sockets by the human hand has often been found undesirable because of hot tubes or lack of space. Moreover, when the tubes are grasped by their fragile glass upper section, the occurrence of breakage and injury is very likely. Furthermore, the tubes are often mounted so close to other parts of the radio in the chassis that there is inadequate room to grasp the tube with the fingers or with conventional tools.

It is an object of this invention to provide a simple, efficient and convenient tool which through a mechanical leverage system will pull or jack the base of a vacuum tube out of its socket in a confined space without requiring the tube to be touched with the operator's fingers.

In the accompanying drawings,

Fig. 1 is a front elevational view of the tool in operative position for extracting a vacuum tube from its socket;

Fig. 2 is a side elevational view of the tool shown in Fig. 1.

Referring now to the drawings, the tool is shown in position to extract a vacuum tube 10 having a base 11 engaged in a socket 12. The base 11 of the vacuum tube is provided with a chamfered or rounded lower edge to expedite the removal of the tube from its socket.

The tool is provided with two cooperating U-shaped frame members 13 and 14, the inner frame 14 being adapted to nest and float within the outer frame 13. Projecting lugs 15—15 are secured to the legs of the inner U-shaped frame 14 and engage slots or guideways 16—16 in the outer frame 13. Longitudinal movement of inner frame 14 is thus limited with respect to the outer frame 13 and the nesting relationship of the frames is maintained by the guideways.

Modifications of the structure of the guideways within the scope of the inventive concept will be apparent to those skilled in the art. For example, as between the legs of the inner and outer frames, the arrangement of guide slots and projecting pins may be reversed, or instead of slots and projecting pins an arrangement of cooperating grooves in both frames may be used.

Two guide rods 17 and 18 are secured to a plate 19 which in turn is welded to the closed end of the outer U-shaped frame 13. A plate 20 is welded

2

to the closed end of inner U-shaped frame 14, and is provided with openings for the entrance of the guide rods 17 and 18 upon which the inner frame 14 may ride in movement. Compression springs 21 and 22, positioned about the rods 17 and 18, are provided to urge the inner frame 14 away from the outer frame 13, a predetermined distance as determined by lugs 15—15 in slots 16—16. A cross bar 27 is provided to reinforce the position of the legs of outer frame 13. The inner frame 14 is thus adapted to reciprocate within outer frame 13 with positioning guides 15, 17—18 located on three of its four sides.

Cam action to lift the inner frame 14 with respect to the outer frame 13 is provided by a disc 23 having an attached knurled actuating handle 24, a link pin 25 eccentrically positioned in the disc 23, and a connecting link 26 which pivots on the pin 25 at one end, passes through openings in the plates 19 and 20 and the outer frame 13, and is secured at its other end to the inner frame 14.

Inwardly projecting wedge-shaped prongs 28 are formed on the open lower end of the inner frame 14 to engage the base 11 of the vacuum tube 10 as shown in Fig. 1.

In operation, the tool is placed in a vertical position alongside the vacuum tube 10 which is to be extracted from its socket 12 and then moved transversely to a position directly over the tube as shown in the drawings whereby the wedge-shaped projecting prongs 28 slide under the chamfered edge of the vacuum tube base 11. While the outer frame 13 is held stationary by resting upon the tube socket 12, the knurled handle 24 is manually rotated in a clockwise direction (Fig. 1) to produce a cam action in the disc 23 and its eccentrically attached connecting link 26 to raise the inner frame 14 and the vacuum tube 10 with it. The inner frame 14 rides on the guide rods 17 and 18 and is further positioned and guided by the attached lugs 15—15 which cooperate with the slots 16—16 in the outer frame 13. The compressed springs 21 and 22 placed about guide rods 17 and 18 urge the inner frame 14 back to normal operating position after extraction of the radio tube.

It is to be understood that the above-described arrangement is simply illustrative of the application of the principles of the invention. Numerous other arrangements may be readily devised by those skilled in the art which will fall within the spirit and scope thereof as defined by the appended claims.

What is claimed is:

1. A lifting tool comprising a pair of cooperating frame members one nesting and floating within the other, guiding means to retain the nesting and floating relation, cam means to draw the frame members together, and means carried by one of the frame members to engage an object to be lifted.

2. In a tool for pulling a vacuum tube from a socket, a support for bridging the tube, means slidable in the support for engaging the base of the tube, and cam means carried by the support for moving the engaging means to pull the tube from its socket.

3. In a tool for pulling a vacuum tube from a socket, a support for bridging the tube, means slidably guided within the support for engaging the base of the vacuum tube, said engaging means being provided with a pair of wedge-shaped prongs for gripping the under side of the base of the tube, and cam means carried by the support for operating the slidably guided means to move the wedge-shaped prongs to pull the base of the tube out of its socket.

4. A lifting tool comprising a pair of cooperating frame members one nesting and floating within the other, guiding means to retain the nesting and floating relation, spring means to urge the frame members apart, cam means for actuating the frame members relative to each other, and means secured to the inner frame member to grip an object to be lifted.

5. A lifting tool comprising a pair of cooperating frame members one nesting and floating within the other and having contiguous complementary enclosed sides, guiding means located on each complementary enclosed side to retain the nesting and floating relation, cam means to move the frame members relative to each other, and means secured to the inner frame member to grip an object to be lifted.

6. A lifting tool comprising a pair of cooperating frames one nesting and floating within the other and having contiguous complementary enclosed sides, guiding means located on each complementary enclosed side to retain the nesting and floating relation, spring means located between the frames to urge the frames apart, means to move the frames relative to each other to compress the spring means, and means secured to the inner frame to grip an object to be lifted.

7. A lifting tool comprising a pair of cooperating frames one nesting within the other, each frame comprising rigid legs joined at one end to form a U-shape, guiding means to retain the nesting relation of the U-shaped frames, cam means to actuate the frames relative to each other, and means secured to the inner frame to grip an object to be lifted.

8. A lifting tool comprising a pair of cooperating frames one nesting within the other, each frame comprising rigid legs joined at one end to appear substantially U-shaped, guiding means to retain the nesting relation of the U-shaped frames, means to move the frames toward each other, resilient means positioned between the frames to urge the frames apart, and means secured to one of the frames to grip an object to be lifted.

9. A lifting tool comprising a pair of cooperating frames nesting one within the other, each frame comprising rigid legs joined at one end to appear substantially U-shaped, the legs of one frame having projecting lugs and the legs of the other frame having guideways adapted to receive the projecting lugs, the closed end of one frame having a plurality of projecting guide rods and the closed end of the other frame having a plurality of apertures adapted to receive the guide rods, cam means located on the outer frame and connected with the inner frame to move the frames toward each other, and means secured to the inner frame to grip an object to be lifted.

10. A lifting tool comprising a pair of cooperating frames one nesting within the other, each frame comprising rigid legs joined at one end to appear substantially U-shaped, the legs of one frame having projecting lugs and the legs of the other frame having guideways adapted to receive the projecting lugs, the closed end of one frame having a plurality of projecting guide rods and the closed end of the other frame having a plurality of apertures adapted to receive the said guide rods, spring means located between the frames to urge them apart, means positioned on the outer frame and connected with the inner frame to draw the frames together, and means secured to the inner frame to grip an object to be lifted.

11. A lifting tool comprising a pair of cooperating frames one nesting within the other, each frame comprising rigid legs joined at one end to appear substantially U-shaped, the legs of the outer frame having a joining section positioned intermediate the ends of said legs, the legs of one frame having projecting lugs and the legs of the other frame having a guideway adapted to receive the projecting lugs, the closed end of one frame having a plurality of projecting guide rods and the closed end of the other frame having a plurality of apertures adapted to receive the said guide rods, spring means located between the frames to urge the frames apart, a cam positioned on the outer frame and connected with the inner frame to move the frames together, and means secured to the inner frame to grip an object to be lifted.

ROBERT SCHNEIDER.

REFERENCES CITED

The following references are of record in the file of this patent:

UNITED STATES PATENTS

Number	Name	Date
2,380,136	Whitney	July 10, 1945