(No Model.) 2 Sheets—Sheet 1.

H. W. JOHNS.

ROOFING FABRIC.

No. 418,519. Patented Dec. 31, 1889.

Fig. 1.

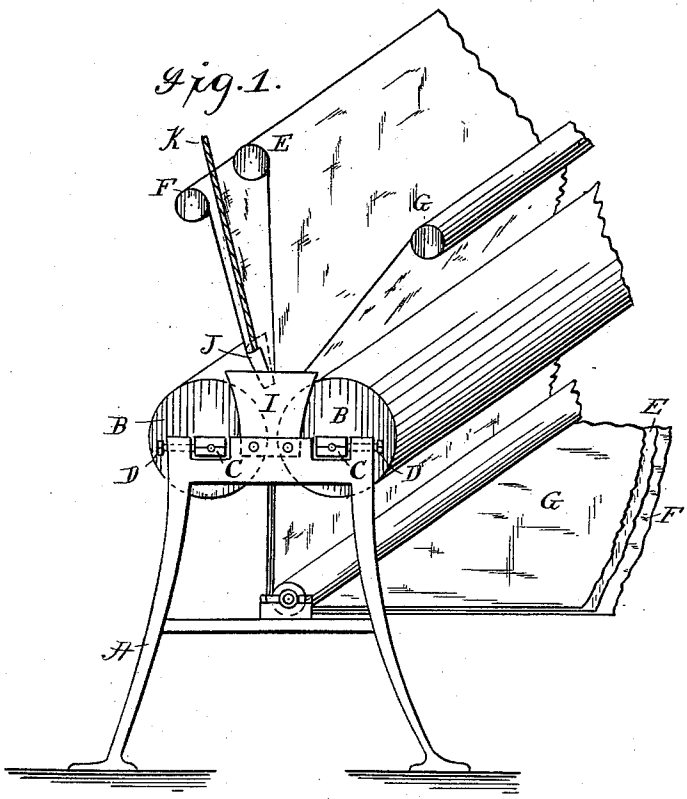

Fig. 2.

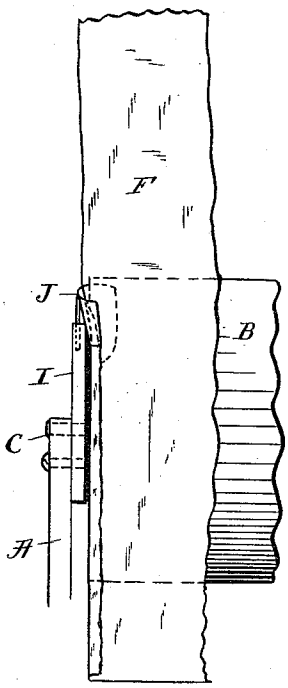

Fig. 3.

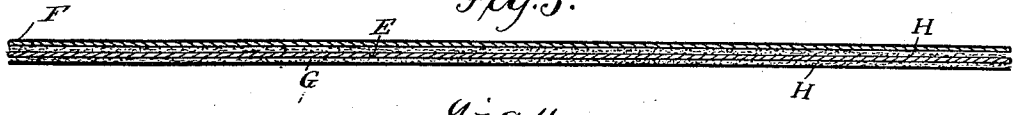

Fig. 4.

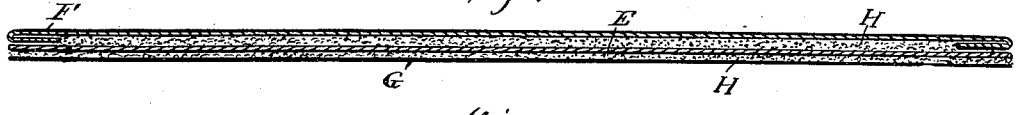

Fig. 5.

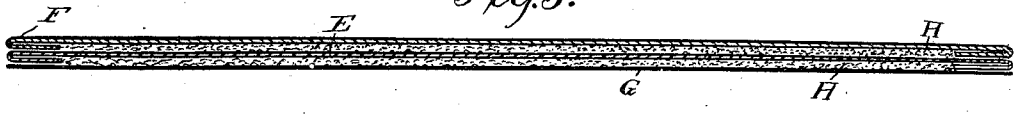

Attest:
W. E. Bowen
F. W. Block

Inventor
Henry W. Johns
by Phillips Abbott
his Attorney

N. PETERS, Photo-Lithographer, Washington, D. C.

(No Model.) 2 Sheets—Sheet 2.

H. W. JOHNS.

ROOFING FABRIC.

No. 418,519. Patented Dec. 31, 1889.

Fig: 9.

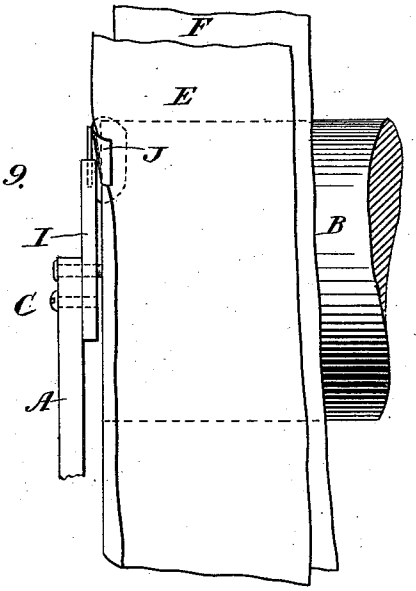

Fig: 7.

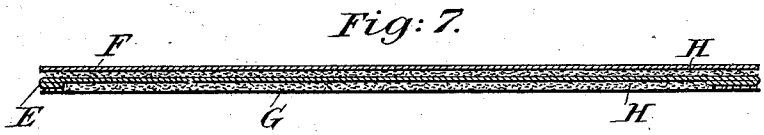

Fig: 8.

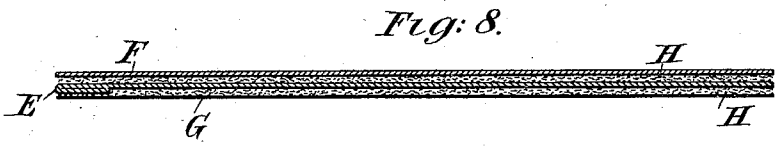

Fig. 6.

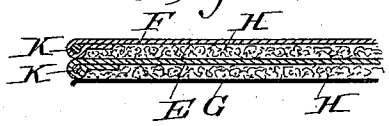

WITNESSES:

John A. Rennie

D. Solis Rutherford

INVENTOR:

Henry W. Johns

By Phillips Abbott

his Attorney.

N. PETERS, Photo-Lithographer, Washington, D. C.

UNITED STATES PATENT OFFICE.

HENRY W. JOHNS, OF NEW YORK, N. Y.

ROOFING FABRIC.

SPECIFICATION forming part of Letters Patent No. 418,519, dated December 31, 1889.

Application filed February 21, 1888. Serial No. 264,815. (No specimens.)

To all whom it may concern:

Be it known that I, HENRY W. JOHNS, a citizen of the United States, and a resident of New York city, in the county of New York and State of New York, have invented certain new and useful Improvements in Roofing Fabrics, of which the following is a specification.

My invention relates to improvements in "roofing fabrics," so called. The fabrics referred to are such as are patented to me in United States Letters Patent No. 125,574, dated April 9, 1872, and are composed, generally speaking, of an inner layer of canvas coated with pitch, tar, asphaltum, or like substance, an under sheet of Manila or other strong paper, and an upper sheet of felt or like material, usually saturated with some waterproofing compound, the several sheets being pressed firmly together and firmly attached to each other by passing them between rollers. In the manufacture of these prior roofing fabrics it has been found impossible to bring the edges of the sheets evenly together, owing to the deviation of the canvas from a straight line, even if of the same width as the other sheets in places, and also the different degrees of compactness with which different pieces of canvas are made, and also different parts of the same piece, which occasion differing degrees of stretching and consequent contraction in width as the canvas passes through the machine. It has, therefore, been necessary, in order to secure substantially straight edges, to trim the edges of the compound sheet after manufacture. This involves additional time and labor and a very considerable waste. Moreover, it necessitates the cutting off of the selvage edge of the canvas, which is particularly desirable to retain, owing to its strength and also because the nails used to attach the sheets to the roof do not tear out therefrom as readily as from the trimmed edge of the canvas.

In the drawings the same reference-letters indicate the same parts in all the figures.

Figure 1 illustrates a perspective view of the principal parts of a machine used by me in making my new roofing material. Fig. 2 illustrates a side view of the machine, the steam-cylinder nearest the observer having been removed and the remaining cylinder and sheets of material being broken off the better to illustrate the apparatus. The felt sheet alone appears in this figure. Figs. 3, 4, 5, 6, 7, and 8 illustrate vertical sections of pieces of roofing fabric as made by me. Fig. 9 illustrates a side view of the machine similar to Fig. 2, but showing the turning in of one edge of the canvas.

A is the frame of the machine, which supports two hollow cylinders B B, which if desired, may be heated in any suitable manner, preferably by steam injected through the journals. They are adjustable toward and from each other by means of sliding journal-boxes C C and thumb-screws D D.

E is a roll of canvas. F is a roll of saturated felt, and G is a roll of Manila or equivalent paper. They are all fed in between the cylinders simultaneously, the canvas being preferably, but not necessarily, in the center, and the felt and paper on each side of it. The pitch, tar, asphaltum, or equivalent adhesive and waterproofing material is supplied from any suitable source upon these several fabrics, as seen at H H. It is prevented from escaping at the ends by shields I I, which press closely against the ends of the cylinders. They may be lined with any suitable material—such as rubber, if necessary—to make the joint tight.

J J are hemmers similar to those used in connection with sewing-machines. They are used by me to turn over the edge of the canvas, the felt, or the paper composing the compound sheet, as hereinafter set forth. They are detachably attached to the shields I I, or at any other suitable point. These shields serve as guides for the several strips of material as they are fed to the machine.

The operation is as follows; All three sheets are fed to the machine as shown. The paper and the felt will run evenly, and will be properly superposed one upon the other, with their edges evenly meeting each other, being guided by the shields I I and by properly-adjusted tension; but the edges of the canvas are ordinarily so irregular that they will not run evenly to coincide with the edges of the other sheets. I therefore, in order to straighten the edges of the canvas, employ the hemmers, as shown in Figs. 1, 2, and 9, which are so ar-

ranged as to turn in the laterally-projecting uneven portions of its edges prior to the compression by the cylinders, and I run the canvas of such width that at no part will it be narrower than the width of the paper and felt. Thus the edges of all the sheets are adjusted exactly to each other, and they are even, uniform, and straight. A compound sheet of this kind, with the edges of the canvas turned in, is shown in Fig. 7. I show it turned in on one edge more than at the other, thus illustrating the unevenness of the canvas. Where the edges of the canvas happen to run straight and to coincide with the edges of the other sheets there will be no turning thereof by the hemmers on either side. On the contrary, at such parts they will run straight through the hemmers, which then act as guides simply for the several sheets or layers. In such cases the resulting compound sheet will be, as seen in Fig. 3, the canvas having on it the selvage edge.

It will sometimes happen that one edge of the canvas will run straight and in coincidence with the edges of the other sheets, while the other edge of the canvas will project laterally, and will consequently be turned in by the hemmers. In such cases the resulting compound sheet will be as shown in Fig. 8, the turned-in edge being at the left and the unturned edge at the right.

Sometimes I purposely make one or more of the sheets or layers which are to compose the compound sheet wider than the completed sheet is to be, and then turn one or more edges of such wide sheet or sheets back upon itself before they pass through the rollers. The folding over of such edge or edges compresses a portion of the cementing compound away from the same. This turning over of the edge or edges thickens the edge of the sheet and prevents the cementing material from running out from between the several sheets when softened or partially melted by excessively-hot weather or by the use of the fabric in unusually-hot places.

In Fig. 4 I show a sheet in which the canvas happened to run straight and to coincide with the other sheets, and in which the felt was purposely made wider than the desired sheet, in order that its edges might be turned in, as shown.

In Fig. 5 I show a sheet in which the canvas and the felt are both turned in, but the paper not.

In order that the cementing material may be more effectively prevented from running out from between the several layers or sheets, I sometimes run a cord K (see Fig. 6) into the folded-over edge of the sheet. This cord thickens the edge, throwing out a rib thereon which, if the cord be sufficiently large, will rest against the adjoining sheet, thus more effectively confining the softened cementing material. The cord also additionally strengthens the edge of the fabric, and it may be incorporated with the turned-in edges of all the sheets composing the fabric, or of certain ones only.

Of course two hemmers will be necessary on each side of the machine to turn over the edges of both the canvas and the felt. Moreover, the edge of the paper or other under layer may also be turned back upon itself. If this is done it should be turned up toward the center of the compound sheet.

In Fig. 6 I show the cord introduced in the edge of the turned-over sheets in a three-ply fabric.

In all the forms illustrated and above described the canvas has the selvage edge left thereon, that being the controlling feature of my invention.

My improvement is as applicable to a two-ply fabric composed of suitable material as to a three-ply, and I sometimes use an asbestus sheet as the outer or the under sheet, one or both, thus giving a fire-proof quality to the compound sheet, and an asbestus sheet may also be used as an intermediate sheet in a three or more ply fabric.

The outer surface or surfaces of my compound sheet may be protected from wear and may also be ornamented by any suitable coating, and the compound sheet may be treated so as to be fire-proof.

The mechanism herein shown and described forms no part of my present invention. It is described merely for the purpose of showing one method in which my products may be manufactured; nor does the method or process disclosed form any part of the invention herein claimed. I do not abandon the method, however, because I have filed an application for a patent therefor on the 26th of October, 1888, it being Serial No. 289,232.

Having described my invention, I claim—

1. A compound sheet comprising, essentially, a plurality of separate sheets of different materials and of average equal widths, one of them being canvas having a selvage edge, any excess in width and projecting edges of the canvas being made straight and equal in width to the other sheets by turning in the edges thereof, and cementing material between the several sheets, substantially as set forth.

2. A compound sheet comprising, essentially, a plurality of separate sheets having cementing material between them, one or both the edges of either of said sheets being folded over upon itself, thus thickening the edge of the sheet and interposing a rib between it and the next sheet, whereby the outflowing of the cementing material is obstructed, substantially as set forth.

Signed at New York, in the county of New York and State of New York, this 20th day of February, A. D. 1888.

HENRY W. JOHNS.

Witnesses:
CHAS. H. PATRICK,
PHILLIPS ABBOTT.