April 5, 1932. E. JOHNSON 1,852,117

HEATER

Filed Sept. 26, 1930 2 Sheets-Sheet 1

Fig. 1.

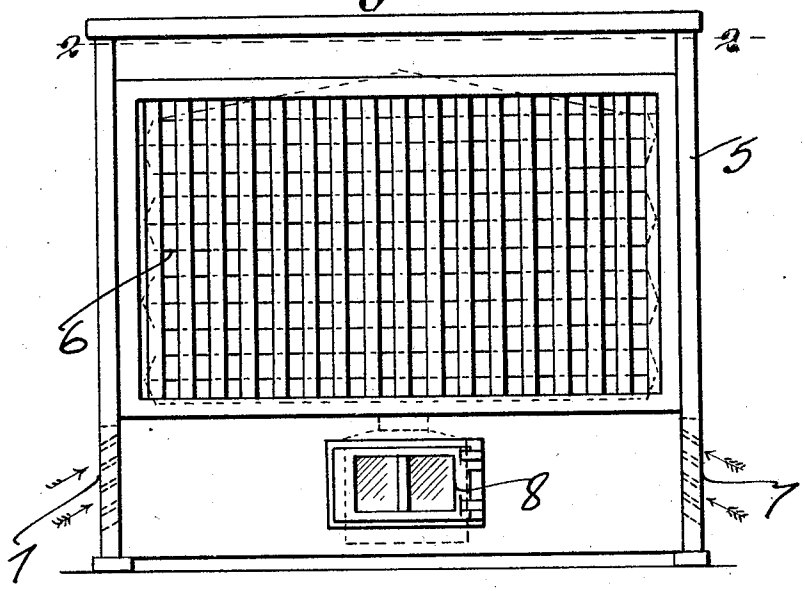

Fig. 2.

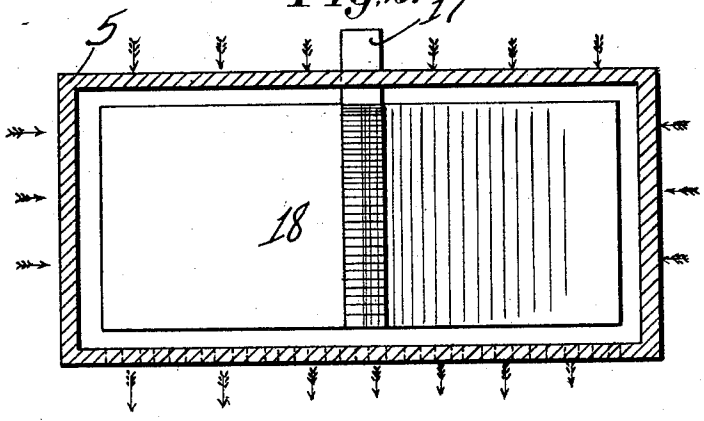

Inventor.
ELMER JOHNSON
By Victor J. Evans
Attorney.

April 5, 1932. E. JOHNSON 1,852,117

HEATER

Filed Sept. 26, 1930 2 Sheets-Sheet 2

Fig. 3.

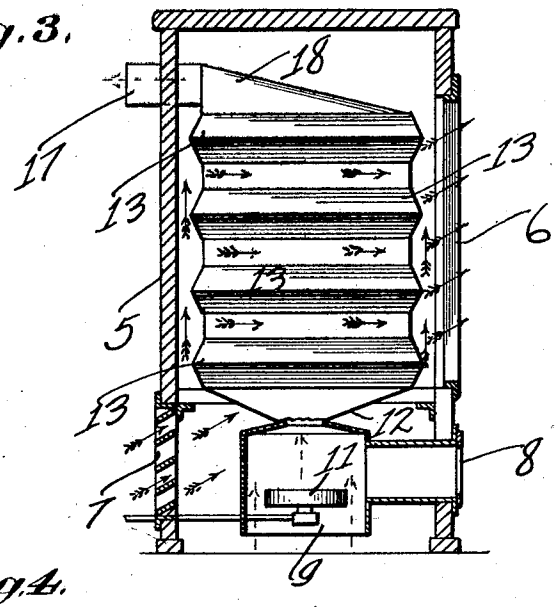

Fig. 4.

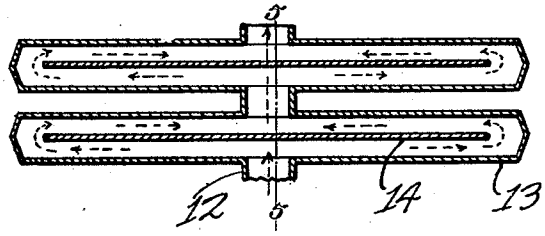

Fig. 5.

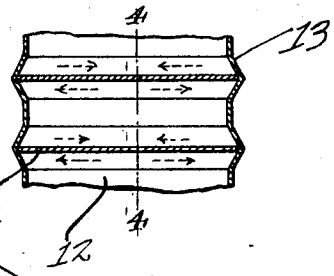

Fig. 6.

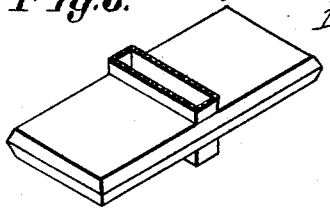

Inventor,
ELMER JOHNSON
By Victor J. Evans
Attorney.

Patented Apr. 5, 1932 1,852,117

UNITED STATES PATENT OFFICE

ELMER JOHNSON, OF SHELBYVILLE, INDIANA, ASSIGNOR TO J. C. KEPPLE, TRUSTEE, OF INDIANAPOLIS, INDIANA

HEATER

Application filed September 26, 1930. Serial No. 484,670.

This invention relates to improvements in heaters.

The principal object of this invention is to produce a heater having a large amount of radiating surface in comparison with the amount of floor space occupied.

A further object of the invention is to produce a heater which is economical to use and manufacture and one which is neat in appearance.

A still further object is to produce a heater wherein the largest possible heat units may be given off, thus resulting in a lower stack loss.

Other objects and advantages will be apparent during the course of the following description.

In the accompanying drawings forming a part of this specification and in which like numerals are employed to designate like parts throughout the same,

Figure 1 is a front elevation of my improved heater,

Figure 2 is a cross-sectional view taken on the line 2—2 of Fig. 1,

Figure 3 is a vertical cross-sectional view showing the radiator in elevation,

Figure 4 is an enlarged detail cross sectional view taken on the line 4—4 of Fig. 5,

Figure 5 is a cross-sectional view taken on the line 5—5 of Fig. 4, and

Figure 6 is a perspective view of one of the radiator sections.

Many forms of heaters are now in use which employ various types of fuel, but I prefer to use oil or gas, which fuel is economical and clean in counter-distinction to wood or coal. In my heater, I cause a circulation of air to pass in the bottom of the heater and out the front, during the passage thru the heater, which is caused to flow over a heated radiating surface, thus absorbing the heat from the surface and delivering it to the room.

In the accompanying drawings wherein for the purpose of illustration is shown a preferred embodiment of my invention, the numeral 5 designates any form of cabinet having a grill 6 at the front thereof and an air-inlet 7 at a point below the grill 6. The door 8 gives access to the fire box 9 in which a burner 11 is positioned. This fire box is connected by a stack 12 to a radiator section 13. This radiator section is preferably flat in shape and has a baffle 14 positioned therein, which baffle extends between the front and back of the radiator, as best shown in Fig. 5, but stops short of the ends as shown in Fig. 4, thus permitting a circulation of the burned gas from a point beneath the baffle to a point above the baffle and thence by a stack 16 to the next radiator section thereabout. The top radiator section is connected to a flue pipe 17 thru the medium of a dome 18. The result of this construction is, that when a fire is lit in the burner 11, the products of combustion will escape upwardly as indicated by the dotted arrows of Figs. 3, 4, and 5 traveling thru each successive radiator section and finally escaping thru the flue 17. As soon as the radiators commence to heat, the warm air surrounding them causes a thermo-circulation, drawing in fresh air thru the opening 7 to replenish the outwardly escaping heated air.

It will thus be seen that I have produced a heater which is economical to manufacture and one which has a large heating surface, thus making an economical heater to operate.

It is to be understood that the form of my invention herewith shown and described is to be taken as a preferred example of the same and that various changes relative to the material, size, shape and arrangement of parts may be resorted to without departing from the spirit of the invention or the scope of the subjoined claims.

Having thus described my invention, I claim:—

1. In a device of the character described, a cabinet having openings formed therein, certain of said openings being at a higher elevation than other of said openings, a heating element positioned within said cabinet, said heating element comprising a plurality of relatively thin hollow sections spaced one above the other, a baffle plate positioned in each of said sections, said baffle plate being spaced from the end walls of the section, and a stack interposed between each of said sections and at the medial point thereof.

2. A heater comprising a plurality of relatively thin hollow sections in a vertical stack and vertically separated, an outlet duct leading from the upper one of said sections, vertical flues forming communications between successive sections, a baffle plate mounted within each section transversely of the line of said flues, an inlet duct leading into the lower-most section, a heater arranged within said inlet duct, and an enclosing cabinet having circulation openings through the walls thereof, some of said openings being below the lower-most hollow section and some above intermediate hollow sections, with the outlet duct projecting through said cabinet.

In testimony whereof I affix my signature.

ELMER JOHNSON.