J. N. BAILEY.

TURBINE CONTROL MECHANISM.

APPLICATION FILED SEPT. 3, 1910.

1,212,311.

Patented Jan. 16, 1917.

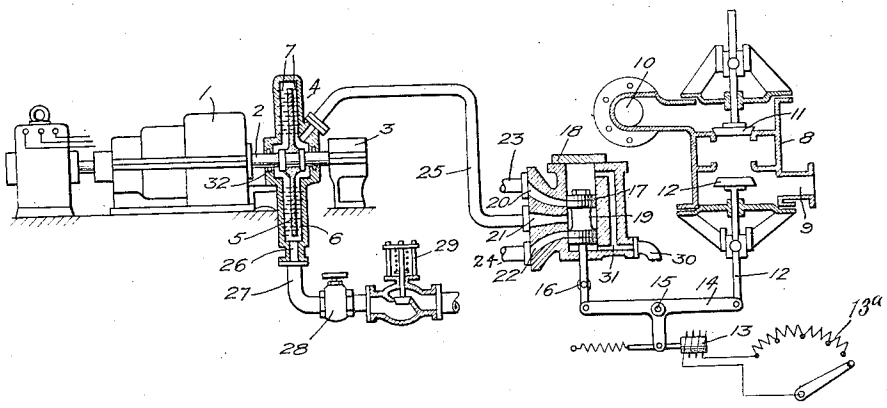

WITNESSES:

B. J. Dunk

INVENTOR.

James Nicolson Bailey

BY Jno. S. Green

HIS ATTORNEY IN FACT

UNITED STATES PATENT OFFICE.

JAMES NICOLSON BAILEY, OF STRETFORD, ENGLAND, ASSIGNOR TO THE BRITISH WESTINGHOUSE ELECTRIC AND MANUFACTURING COMPANY, LIMITED, OF LONDON, ENGLAND.

TURBINE-CONTROL MECHANISM.

1,212,311. Specification of Letters Patent. Patented Jan. 16, 1917.

Application filed September 3, 1910. Serial No. 580,284.

To all whom it may concern:

Be it known that I, JAMES NICOLSON BAILEY, a subject of the King of Great Britain, and a resident of Stretford, England, have made a new and useful Invention in Turbine-Control Mechanism, of which the following is a specification.

This invention relates particularly to systems of marine propulsion of the kind in which turbines and electric generators are used for driving motors connected with the propellers, the speed of the propellers being controlled by varying the speed of the turbine and generator, and has for its object to provide improved means for effecting the braking of the rotating element of the turbine.

In power transmission systems of the kind above mentioned, it is essential to be able to speed up or slow down the turbine quickly and at will. The turbine is speeded up by admitting more steam, while it is stopped or slowed down by cutting off the steam and applying a brake. The controller may be operated manually or otherwise. It has been proposed, therefore, to provide, in addition to what may be termed the main section of the turbine, a braking section comprising a number of blades, or blades and nozzles, into which steam is adapted to be automatically delivered when the controller is moved from a power position to a lower power position, or from a power position to a stop position in order to effect a braking of the rotating element. In this arrangement the admission of steam to the braking section of the turbine is controlled by an electrically operated valve device dependent for its operation upon the movement of the controller.

In order that the nature of the invention may be clearly understood, I will proceed to describe by way of example how it may be carried out in practice.

In the accompanying drawings, the figure is a diagrammatic view of a braking system in which water is employed as the braking medium, showing the braking portion of the turbine with the valves and valve controlling mechanism arranged in accordance with the invention.

As the valve mechanism for governing the supply of steam to the turbine may be of the type described in the specification of my English Letters Patent No. 12075 of 1908, I have shown valve mechanism of this description for carrying out the invention, and as reference may be had to that specification only a sufficient portion of the apparatus will be described as will enable the present invention to be clearly understood.

Referring now to the figure, the shaft 2 of the turbine 1 is shown supported in bearings 3. Mounted upon the shaft 2, and surrounded by a suitable casing 4 is a disk 5 provided with a series of blades or projections 6; similar blades or projections 7 are provided attached to the wall of the casing, the disk 5 and its surrounding casing constituting the braking section of the turbine. The main steam chest of the turbine is shown at 8 connected by means of a passage 9 to the source of steam supply and an outlet passage 10 is provided leading to the turbine; the flow of steam through the steam chest being controlled by a main valve 11 and an auxiliary valve 12. The auxiliary valve 12 is adapted to cut off the supply of steam to the turbine, irrespective of the position of the main valve 11, whenever the controller 13^a is moved from a power position to a lower power position or to a stop position; that is to say, whenever it is necessary to effect a braking of the turbine, under the action of a solenoid 13, the circuit of which is closed whenever this movement of the controller occurs. The stem of the valve 12 is connected to one arm of a T shaped member 14 pivoted at 15 and rotated on its pivot under the action of the solenoid. The other arm of the T-shaped member is connected by a link 16 to the stem of a piston valve 17, which is arranged in a cylinder formed within a casing 18. The piston valve 17 is provided with an annular groove 19 adapted to establish communication between ports 20 and 21 or ports 21 and 22 formed in the wall of the casing in accordance with its position in the cylinder. The port 20 is connected by means of a pipe 23 to the condenser (not shown) and the port 22 is connected by means of a pipe 24 to a source of water supply, the middle port 21 being connected by means of a pipe 25 to the interior of the casing 4 in which the disk 5 is located.

An outlet 30 is provided in the casing 18 connected by means of passage 31 formed in the wall of the casing to the top and bottom of the cylinder to permit of drainage

from this cylinder, and for balancing the valve 17.

The interior of the braking section of the turbine is connected to the atmosphere by means of a passage 26 and pipe 27 connected thereto, the flow of water through this pipe being controlled by means of a manually operated throttle valve 28 and a spring actuated valve device 29. The latter of which is adapted to permit the flow of water in one direction but to be normally retained on its seat under the action of the spring. Under normal conditions, the piston valve 17 will be located at the top of its cylinder and communication will be established between ports 20 and 21 so that the braking section of the turbine will be in direct communication with the condenser.

When the solenoid 13 is energized the T-shaped member 14 will be rotated on its pivot, thereby closing the valve 12 cutting off the supply of steam to the turbine and moving the piston valve 17 to the bottom of the cylinder establishing communication between ports 21 and 22 and closing the port 20. Under these conditions, water will be supplied from the port 22 to pipe 25 by means of the annular groove 19 in the piston head to the braking section of the turbine and the turbine will be quickly brought to rest owing to the frictional resistance between the water and the rotating disk 5. The projections 6 on the said disk are provided to increase this resistance and the projections 7 are adapted to obstruct the rotation of the entire volume of water within the casing under the action of the disk. Suitable packing glands 32 are provided between the casing 4 and the turbine shaft to prevent leakage of water from the braking section which will at the same time effectually prevent the entrance of air into the interior of the casing. Since, as before explained, the spring actuated valve device 29 is normally held on its seat, under running conditions, when the interior of the casing 4 is in communication with the condenser, the valve will be closed so that the disk 5 will be rotating *in vacuo*, thereby reducing the frictional resistance under running conditions to a minimum.

Having now particularly described and ascertained the nature of my said invention, and in what manner the same is to be performed, I declare that what I claim is:

1. In combination with a prime mover, means for controlling the operation of the prime mover, a liquid brake for said prime mover, and means for delivering braking liquid to the brake and for simultaneously actuating the controlling means of the prime mover to shut off the actuating fluid thereto, and for simultaneously actuating the controlling means of the prime mover to deliver actuating fluid, and for connecting the interior of the brake with a region of low pressure.

2. In combination with a prime mover, controlling means therefor, a liquid brake for stopping the prime mover, a valve for delivering braking liquid to the brake, and means for simultaneously actuating said valve and said controlling means to stop said prime mover.

3. In combination with a prime mover, a regulating valve for controlling the delivery of motive fluid to the prime mover, an auxiliary valve for cutting off the fluid supply to the regulating valve and to said prime mover, a liquid brake for the prime mover, means for placing the interior of the brake in communication with a region of low pressure and for opening the auxiliary valve, and for cutting off communication between the interior of the brake and the region of low pressure, for delivering liquid to the brake and for closing the auxiliary valve.

4. In combination with a prime mover, a valve for cutting off the supply of motive fluid to the prime mover, a liquid brake for stopping the prime mover, means for simultaneously connecting the interior of the brake to a region of low pressure and for opening said valve, and for simultaneously cutting off communication between the interior of the brake and the region of low pressure, for delivering liquid to said brake and for closing the valve.

In testimony whereof I have hereunto subscribed my name this 23rd day of August, 1910.

JAMES NICOLSON BAILEY.

Witnesses:
JAS. STEWART BROADFOOT,
E. M. JESSOP.