Jan. 19, 1932. F. J. CANNON 1,841,711

COUNTING AND DISPLACING APPARATUS

Filed April 11, 1927 4 Sheets-Sheet 1

Fig. 1.

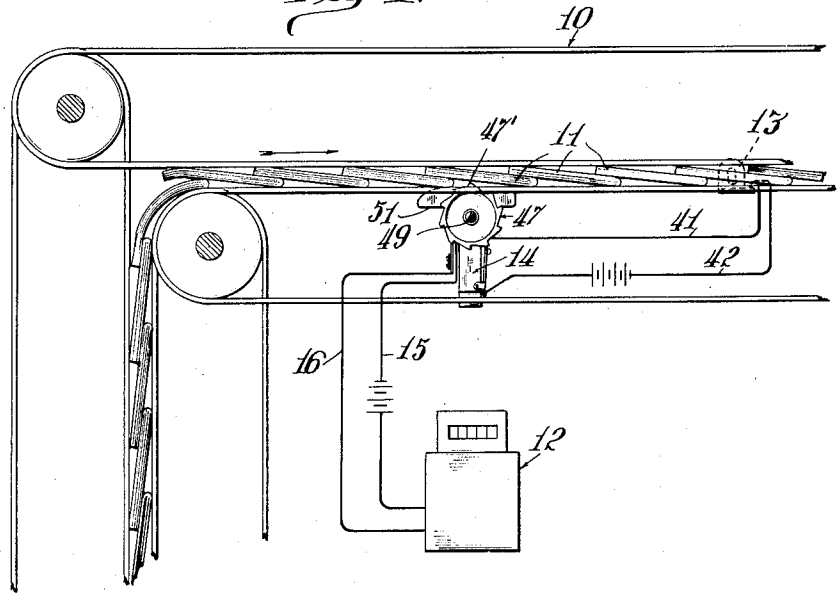

Fig. 2.

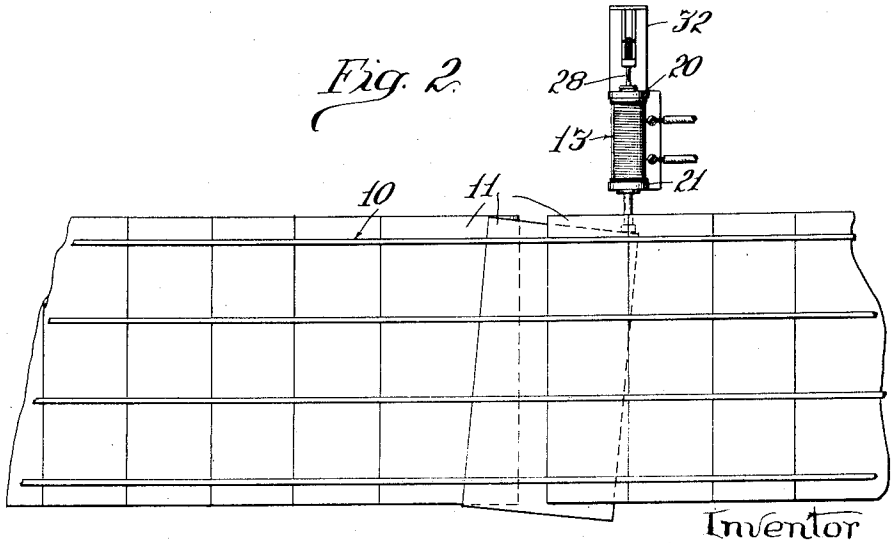

Inventor

Frank J. Cannon

By Barnett & Truman

Attorneys

Jan. 19, 1932. F. J. CANNON 1,841,711

COUNTING AND DISPLACING APPARATUS

Filed April 11, 1927 4 Sheets-Sheet 2

Fig. 3.

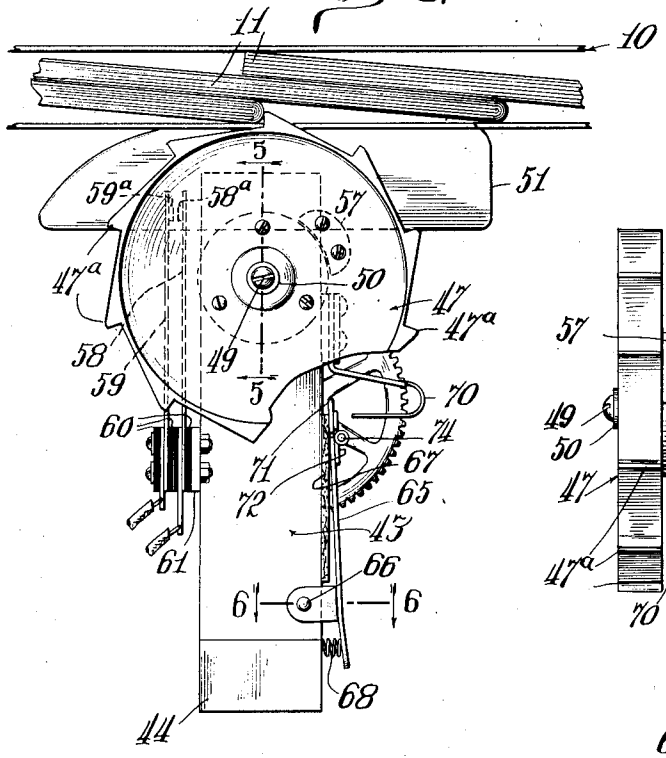

Fig. 4.

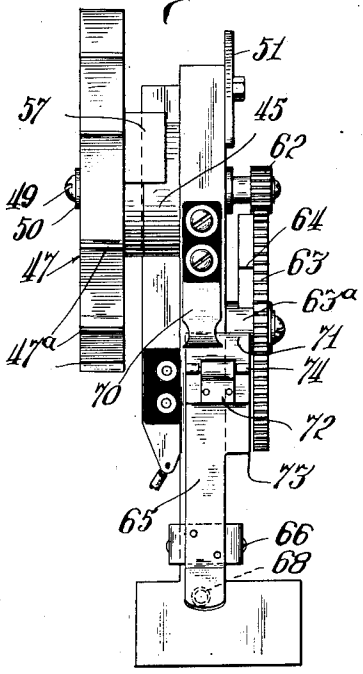

Fig. 5.

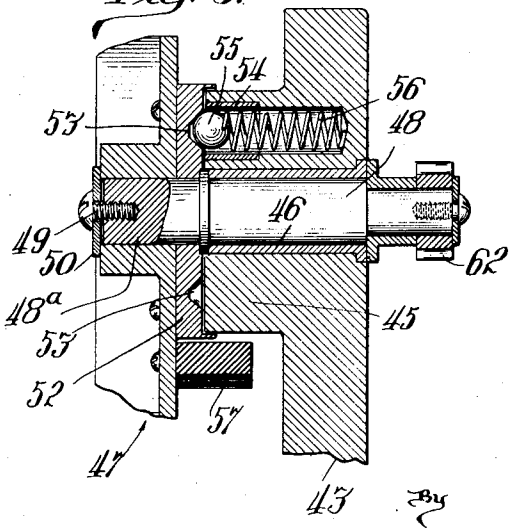

Fig. 6

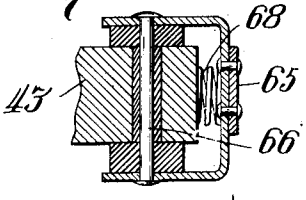

Inventor

Frank J. Cannon

By Barnett & Truman

Attorneys

Jan. 19, 1932. F. J. CANNON 1,841,711

COUNTING AND DISPLACING APPARATUS

Filed April 11, 1927 4 Sheets-Sheet 3

Fig. 7.

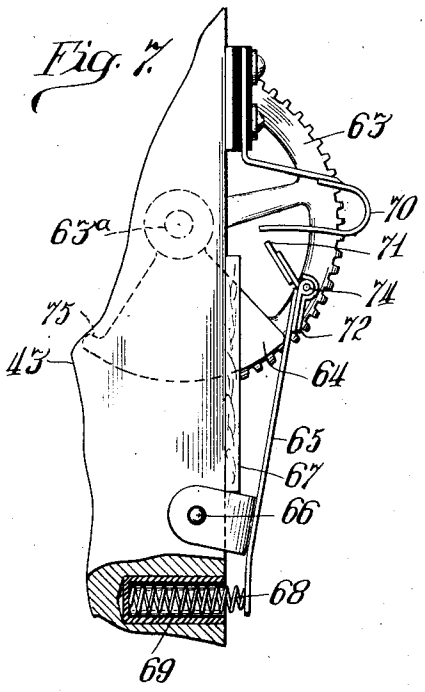

Fig. 8.

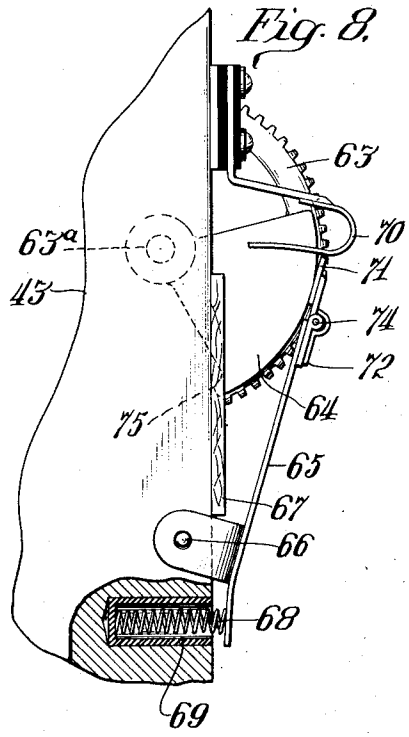

Fig. 9.

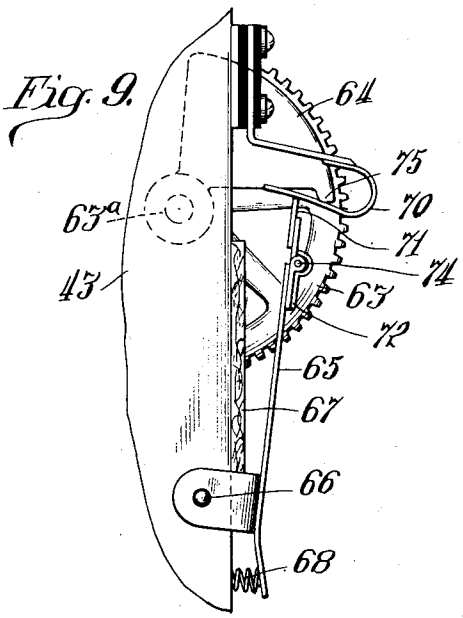

Fig. 10.

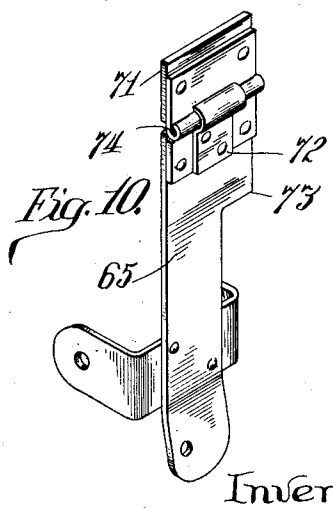

Inventor
Frank J. Cannon
By Barnett & Truman
Attorneys

Jan. 19, 1932. F. J. CANNON 1,841,711

COUNTING AND DISPLACING APPARATUS

Filed April 11, 1927 4 Sheets-Sheet 4

Fig. 11.

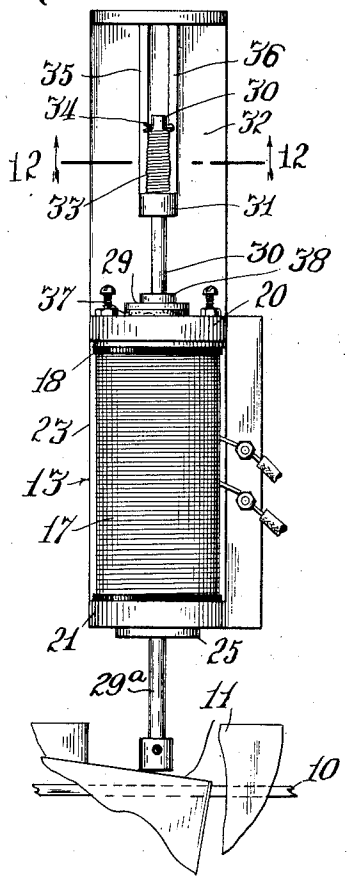

Fig. 12.

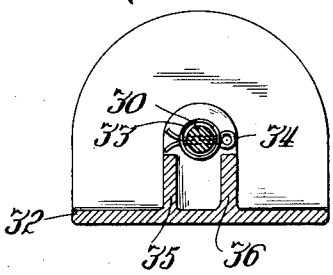

Fig. 13.

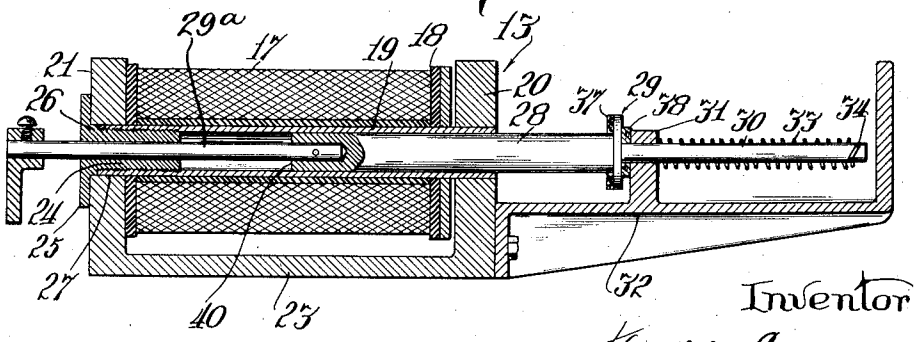

Inventor
Frank J. Cannon
By Barnett & Truman
Attorneys

Patented Jan. 19, 1932 1,841,711

UNITED STATES PATENT OFFICE

FRANK J. CANNON, OF CHICAGO, ILLINOIS, ASSIGNOR TO PRODUCTION METER COMPANY, OF CHICAGO, ILLINOIS, A CORPORATION OF DELAWARE

COUNTING AND DISPLACING APPARATUS

Application filed April 11, 1927. Serial No. 182,757.

My invention relates to apparatus for counting articles and for displacing one or more articles at predetermined times as they are moved past the apparatus so as to facilitate the subsequent handling of the articles.

The primary object of the invention is to provide an improved counting and displacing apparatus which will accurately record the number of articles passing the apparatus and which will also separate the articles into lots of predetermined quantities.

Another object is to provide an improved apparatus of the above character which may be used in situations where it is necessary to count and displace the articles while they are moving at a high velocity. In this connection the invention contemplates mechanism adapted to be engaged by the moving articles, which mechanism is so connected with a counting device that the counting device per se may be operated at a speed much lower than the movement of the articles so as to avoid inaccuracies due to coasting of the revoluble indicating members, or other causes.

Another object is to provide, in apparatus of the above character, a displacing device which will be substantially instantaneous in its operation and which is so timed with relation to the operation of the counting device that the number of articles in the several divisions or lots will be uniform throughout the full operating period.

The invention has for further objects such other new and improved arrangements and constructions of devices and of the combinations hereinafter described and claimed for carrying out the above stated objects and such other objects as will appear from the detailed description of one embodiment of the invention shown in the accompanying drawings. The invention is illustrated in the accompanying drawings in connection with a conveying apparatus for handling newspapers in a printing establishment. Such illustration however is employed merely for the purpose of convenience and so as to illustrate the invention in a situation where the articles to be counted are passed through a conveyor at high velocity.

Fig. 1 is a fragmentary view in side elevation of a conveyor of the type ordinarily used in printing establishments, for conveying the folded papers from the printing or folding machine to the shipping room, and showing the counting and displacing devices of my invention positioned to be operated by the papers passing through the conveyor.

Fig. 2 is a plan view of a portion of a conveyor of the above character, and illustrating the manner in which the displacing device engages one of the papers to displace it with relation to the other papers.

Fig. 3 is a side view in elevation of the switch mechanism for controlling the operation of the counting and displacing devices.

Fig. 4 is an end view of the device shown in Fig. 3.

Fig. 5 is a fragmentary sectional view made on a larger scale than the preceding figures and taken on line 5—5 of Fig. 3.

Fig. 6 is a sectional view taken on line 6—6 of Fig. 3.

Figs. 7, 8 and 9 are fragmentary views of the switch mechanism shown in Fig. 3 illustrating the several positions of the switch arm for making and breaking an electric circuit through the displacing device.

Fig. 10 is a view in perspective of the switch arm as shown in Figs. 7, 8 and 9.

Fig. 11 is a plan view of the displacing device in a position as indicated in Fig. 2, but shown on a somewhat larger scale.

Fig. 12 is a cross sectional view through the frame of the displacing device, the section being taken on line 12—12 of Fig. 11, and

Fig. 13 is a longitudinal section taken through the displacing device.

In the drawings, 10 designates a section of a conveyor of the type usually used for conveying newspapers 11 in a folded and overlapped condition. 12 designates an electrically actuated counting device, 13 is an electrically actuated device for displacing one of the papers with relation to the other, and 14 designates the mechanism for opening and closing the electric circuit through the devices 12 and 13. The counting mechanism may be of any suitable or preferred construction, and is, therefore, not described in de-

tail in the present application. It will be understood, however, that upon closing an electric circuit through the wires 15 and 16, it energizes the counting mechanism so as to move the digit wheels to indicate one additional unit, that is to say, the right hand indicating wheel of the counter will be moved the amplitude of one graduation on its periphery. In view of the fact that the papers come from a printing press at a very high velocity, in some instances, at the rate of twenty thousand per hour, the counting device is operated at a reduced speed relative to the movement of the paper, and is actuated by means of the circuit closing mechanism 14 in the manner hereinafter described.

The circuit closing mechanism 14 also opens and closes an electric circuit through the paper displacing device 13 and will, therefore, be described in detail after the construction of the said displacing device has been described.

The paper displacing device consists, preferably, of an electric coil 17, wound upon the spool 18 of insulating material and supported on a tube 19 of brass or other non-magnetic material, between upstanding portions 20 and 21 of an iron yoke 23. One end of the brass tube 19 is threaded through a central opening in the portion 20 of the yoke. The other end is threaded onto the body portion of a fixed core 24 of soft iron. This fixed core is provided with a relatively large head portion 25 which bears flat against the outer face of the yoke portion 21. The body portion 26 of the fixed core is preferably formed so as to fit tightly within the central opening 27. A movable core 28 of soft iron is slidably fitted in the brass tube. A plunger rod 29[a] of brass or other non-magnetic metal extends through the axis of the fixed core 24 and is attached at the inner end of the sliding core 28. The other end of the sliding core is provided with a head 29 and carries a brass rod 30. The brass rod 30 slides in a bearing 31 formed on a brass bracket 32 attached to one end of the yoke 23. A spring 33 surrounds the rod 30 and bears against the bearing so as to normally hold the movable core 28 in the retracted position shown in Fig. 13. The spring 33 is held in position by means of a cotter pin 34. The cotter pin in addition to holding the spring 33 in place also bears against the spaced longitudinally extending webs 35 and 36 so as to prevent any substantial rotational movement of the sliding core. Washers 37—38 are positioned on opposite sides of the head 29 of the movable core so as to provide cushions to engage the end face of the yoke and one face of the bearing 31, respectively, when the core 28 is operated. The length of the core 28 is preferably such that when the cushioning washer 37 bears against the outer face of the metal yoke 23, the inner end 40 of the sliding core will remain out of contact with the stationary core 24 and thereby avoid the effect of residual magnetism and permit the core to return quickly to its normal retracted position. The size of the wire from which the coil 17 is wound is preferably of a relatively large gauge so as to increase the torque during the energization and also avoid the effect of residual magnetism.

The outer end of the plunger 29[a] may be provided with a shoe of suitable shape adapted to be brought into contact with the folded end of the papers, when the apparatus is employed in the manner illustrated, or into contact with such other articles as the apparatus may be employed to count and displace.

The coil 17 is energized by the closing of an electric circuit through the wires 41, 42.

The mechanism for opening and closing the electric circuit through the counting mechanism and through the paper displacing device consists preferably of a body member 43 provided at its lower end with a base portion 44 adapted to be secured to the same portion of the conveyor or to any other stationary part of the conveyor or other member, so as to be in position to be engaged by the papers. The upper end of the body member is formed with a hub portion 45 through which extends a bearing bushing 46. A shaft 48 is journaled in the bushing 46 and is provided at one end with an operating wheel 47. The wheel 47 is attached rigidly to the end 48[a] of the said shaft by means of the screw 49 and washer 50. The periphery of the wheel 47 is formed with a plurality of ratchet teeth 47[a] adapted to be engaged by the folded end of the papers 11 as they pass through the conveying mechanism so as to rotate the wheel 47 in a clock-wise direction as viewed in Fig. 3. 51 designates a guide disposed in alignment with the root of the teeth so that the papers are prevented from engaging but one tooth only of the wheel. When the papers 11 are arranged or overlapped in close formation, such as indicated in the drawings, the wheel 47 will be rotated without appreciable interruption between the successive papers. When the papers are disposed in irregular arrangement or when the overlapping portions are a considerable distance apart, the wheel 47 will operate intermittently. In order to insure that the wheel will be moved the amplitude of one tooth only for each paper passing through the conveyor, a releasable latch mechanism is provided and consists, preferably, of a plate 52 secured to the inner face of the wheel 47 and provided with a conical cavity for each of the teeth 47[a]. The hub portion of the body 43 is provided with a bore, the outer end of which contains a metallic bushing 54, a ball 55 and spring 56 are positioned in the said spring pocket so that the spring will force the ball 55 into one of the conical

cavities 53 when a tooth 47ª of the wheel 47 is in position to be engaged by a paper. The engagement of the ball 55 in the cavity 53 will be sufficient to prevent the wheel 47 from being carried forward by its momentum, but will not provide such resistance as to prevent or hinder rotation of the wheel 47 under the pressure of the paper 11. A fiber cam-shaped block 57 is attached to the inner face of the wheel 47 so that it will be brought into engagement with the spring 58 and force the latter into contact with a spring contact member 59 and thereby close the electric circuit through the wires 15 and 16 for controlling the operation of the counting device. The spring contact members 58 and 59 are insulated from each other and from the body 43 of the device by means of fibre washers 60 and are clamped to a leg 61 projecting outwardly from the body 43. The springs 58 and 59 are preferably of such length that the cam 57 in forcing the spring 58 against the spring 59 effects a rubbing contact of the contact points 58*a*, 59*a* of said springs.

In the present embodiment it will be seen that the fiber cam member 57 engages the contact spring 58 so as to close a circuit through the wires 15 and 16 only once for each complete rotation of the wheel 47. In this connection it will be observed that the wheel 47 is provided with ten teeth and since the device is so arranged that it is moved the amplitude of one tooth by each of the papers passing through the conveyor that the circuit through the counting mechanism is closed only once for each ten papers. This manner of operating the counting mechanism indicates only one-tenth of the papers passing through the conveyor, but makes it possible to read the numerals on the counting device while the papers are being moved at a high velocity. The actual number of papers may be determined, with sufficient accuracy for ordinary operating purposes, by adding one cipher to the right-hand end of the number indicated on the counter.

The portion of the switch mechanism for opening and closing the electric circuit through the paper displacing device 13 consists preferably of a pinion 62 secured to the other end of the shaft 48. The pinion 62 meshes with a gear 63 journaled at 63ª on the body 43. The pinion and gear are so proportioned, in the present embodiment, that the pinion 62 is revolved five times for each complete revolution of the gear 63. A segment cam member 64 is secured to the inner face of the gear 63 so as to be rotated therewith. The rotation of the gear 63 brings the periphery of the cam 64 to bear against the inner face of an electric switch arm 65. The switch arm 65 is pivoted to the body 43 at 66 and is normally held in the position indicated in Fig. 3, that is to say against the fiber strip 67 by means of a spring 68 positioned in a spring pocket 69 so as to bear against the lower end of the switch arm. The switch arm 65 is preferably so designed that it will engage the contact spring 70 during the return movement of the arm 65. This operation is obtained by providing the upper end of the switch 65 with a hinged portion 71. A brace 72 prevents the portion 71 from hinging outwardly from the plane of the outer face of the arm, that is to say, the breaking of the hinge, is confined to an inward movement. The cam 64 bears, during its initial engagement with the arm 65 against the portion 73 of the arm (Figs. 4 and 10). During this initial engagement the end portion 71 breaks at the hinge 74 so as to assume the position substantially as shown in Fig. 7 and thereby clears the spring 70 during the outward movement of the arm. When the cam has forced the arm 65 outwardly to a sufficient distance to clear the spring 70, the cam then rides upon the inner face of the hinge portion 71 and moves into alignment with the body of the arm, shown in Fig. 8. As soon as the hinged portion 71 rides off the edge 75 of the cam (Fig. 9) the coil spring 69 forces the arm 65 inwardly to its normal inoperative position. During this movement the edge of the portion 71 of the arm makes a wiping contact with the spring contact member 70 so as to momentarily close an electric circuit through the coil of the paper displacing device. The said coil as before stated is so formed that it will be energized by the relatively quick snap action of the switch arm 65. The momentary energization of the coil 17 causes the movable core 28 to be moved toward the left of Fig. 13 so that the shoe at the end of the plunger will be brought into engagement with the folded end of the newspaper. As soon as the circuit through the coil 17 is broken by the action of the switch 65 the coil spring 33 moves the core 28 to its retracted position, as shown in Fig. 13.

By reason of the fact that the pinion 62 and the gear 63 are so proportioned that the gear 63 makes one complete revolution for five complete revolutions of the gear 62 and operating wheel 47, there is one paper displaced for each fifty papers passing through the conveyor.

This particular division of the stack of papers may be varied by changing the proportion of the gear 63 with relation to the pinion 62. It may also be varied by providing more than one cam 64 so that the circuit through the pawl 17 will be closed more than once for each complete revolution of the gear 63.

When employing my invention in connection with an apparatus for handling newspapers it will be ordinarily sufficient to so displace the papers that one corner will project from the stack. It will be obvious, however, that when the invention is used in con-

nection the handling of articles of different size or character the articles engaged by the displacing device may be moved to any desired position on the conveyor, or if desired may be removed entirely from the conveyor.

I claim:

1. In apparatus of the character described, the combination with means for conveying articles over a predetermined path, and an electrically operated device for displacing one of said articles relative to the others, of means for closing the circuit through the displacer comprising a wheel positioned to be rotated by the movement of said articles, a fixed contact member, a movable contact having a one-way engagement with said fixed contact, and means operated by the movement of said wheel to move said movable contact in one direction and to release the same, whereby a wiping contact is made between the fixed and moving contacts during the return movement of the latter.

2. In apparatus of the character described, the combination with means for guiding objects in a predetermined path, and an electrically operated device for displacing one of said objects relative to the others, of means for closing the electric circuit through the displacing device comprising a wheel positioned to be rotated by engagement with said objects, a fixed contact member, a movable contact having a hinged end portion adapted to fold during the outward movement thereof to prevent engagement thereof with the fixed contact, means operated by a plurality of revolutions of said wheel for moving the said hinged member to a predetermined position and to release the same, whereby said member has a wiping engagement with the fixed contact member.

3. In apparatus of the character described, the combination with means for conveying objects over a predetermined path, and an electrically operated device for displacing one of said objects relative to the others, of means for closing the electric circuit through the displacer device comprising a wheel positioned to be rotated by engagement with a plurality of the objects, a fixed contact member, a movable contact having a hinged end portion adapted to fold during the outward movement thereof, to prevent engagement with the fixed contact, a cam segment operated by a plurality of revolutions of said wheel for moving the said hinged member to a predetermined position and to release the same, whereby said member has a wiping engagement with the fixed contact member during its return movement, and a spring for forcing said hinge member to its normal circuit breaking position.

4. In apparatus of the character described, the combination of means for conveying objects over a predetermined path, a wheel operated intermittently by the movement of said articles, means for releasably holding the wheel in its several positions, a fixed contact member, a movable contact member formed to have a one-way engagement only with the fixed contact, and cam mechanism operated through the movement of said wheel to force the movable contact member in one direction, and a spring for returning said movable contact member to its normal position.

5. In apparatus of the character described, the combination with means for conveying flat objects in an overlapped condition, an electrically operated counting device and an electrically operating device for displacing one of said objects relative to the other, of means for opening and closing the electric circuits through said counter and said displacing devices comprising a wheel operated intermittently by movement of the said objects through said conveyor, means for releasably holding the wheel in its several positions, contact members arranged in circuit with said counting device, means on said wheel for closing said contact members once for each complete revolution of said wheel, a fixed contact and a movable contact in circuit with said displacing device, a pinion operated by the movement of said wheel, a gear meshing with said pinion, and cam mechanism carried by said gear for forcing said movable contact in one direction and releasing the same, and a spring for forcing said contact member to its returned position.

FRANK J. CANNON.