United States Patent [19]

Anderson et al.

[11] **3,728,852**

[45] **Apr. 24, 1973**

[54] **SERVICING ASSEMBLY FOR AUTOMATIC YARN PIECING APPARATUS**

[75] Inventors: **Gordon C. Anderson; Albert D. Harmon,** both of Clemson, S.C.

[73] Assignee: **Maremont Corporation,** Chicago, Ill.

[22] Filed: **June 3, 1971**

[21] Appl. No.: **149,501**

[52] **U.S. Cl.** .....**57/34 R**

[51] **Int. Cl.** **D01h 15/00**

[58] **Field of Search** .....57/34 R, 53; 242/35.5, 35.6

[56] **References Cited**

UNITED STATES PATENTS

3,486,319	12/1969	Lee, Jr. et al.	57/34
3,403,866	10/1968	Bell et al.	57/53 X
3,540,200	11/1970	Tsukumo et al.	57/34

Primary Examiner—Werner H. Schroeder
Attorney—Joseph H. Heard

[57] **ABSTRACT**

The disclosed servicing assembly, which preferably includes yarn-positioning and traveler-threading mechanisms, is operable adjacent a ring rail of the spinning machine being serviced by the piecing apparatus. The servicing assembly is mounted by a compound bracket upon an upright splined shaft, which shaft is rotatably mounted upon the mobile carriage of the piecing apparatus and operatively connected to a control cam mechanism of the apparatus, for cable-controlled vertical movement of the assembly longitudinally of the shaft and horizontal movement thereof in response to shaft rotation. A spring biased latch normally maintains the assembly in an elevated position above the maximum elevation of the ring rail of the spinning machine serviced by the apparatus. Release of the latch permits gravity descent of the assembly from its elevated position, whereupon a support member connected thereto is biased from a retracted position to an extended position wherein it overlays and engages the ring rail and thereby supports the assembly for vertical movement in unison therewith. Rotation of the splined shaft about its axis effects desired movement of the entire assembly horizontally toward and away from the spinning machine, and produces desired relative movement between a yarn depressor and other servicing components of the assembly. The yarn depressor preferably is provided with a cam surface engageable with the ring rail to insure its precise positioning relative thereto. Return upward movement of the assembly to its elevated position, which return movement is realized by a cable system having desirable "-fail-safe" features, automatically effects re-engagement of the latch and movement of the support member to its retracted position.

22 Claims, 15 Drawing Figures

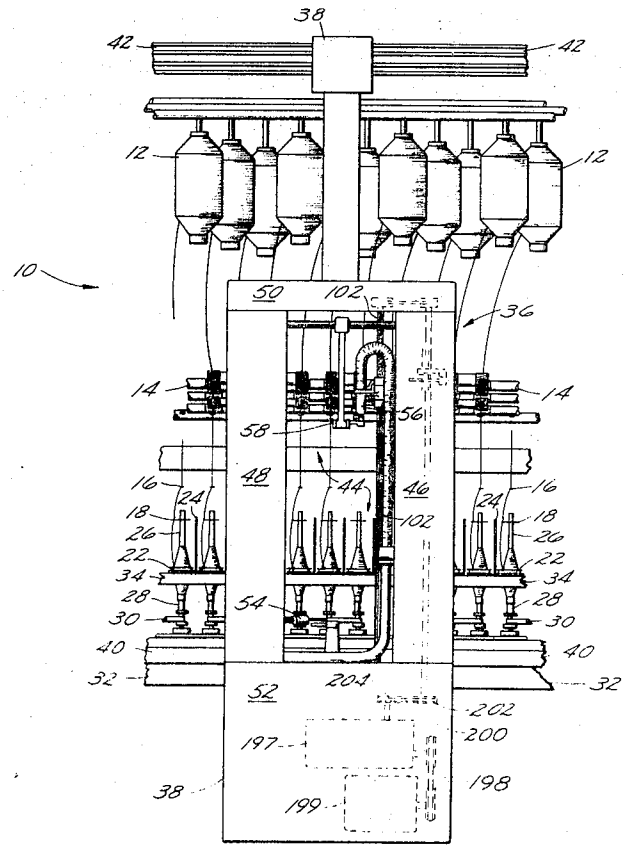

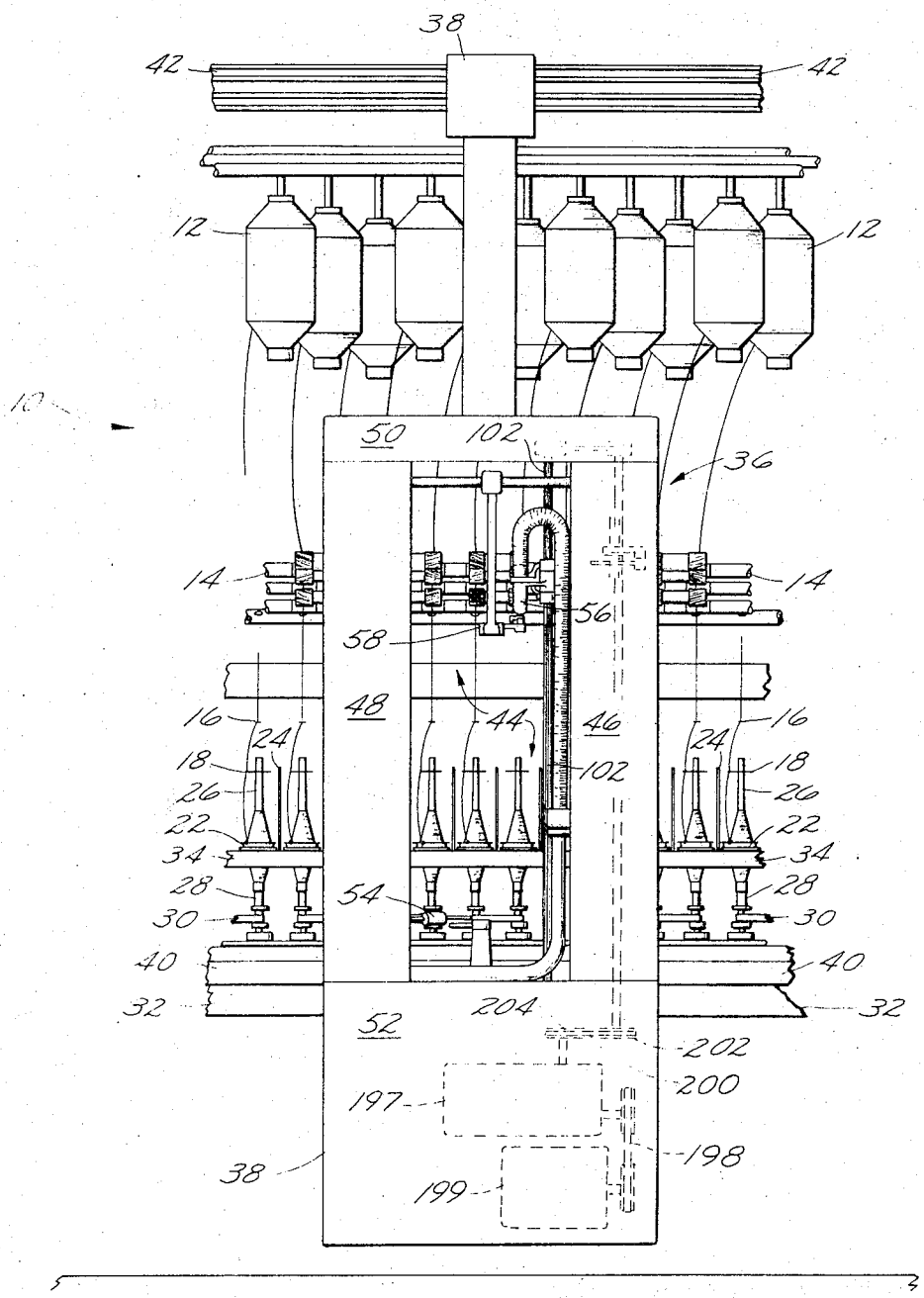

Fig. 1

INVENTORS
GORDON C. ANDERSON
ALBERT D. HARMON

BY Hunt, Heard & Rhodes

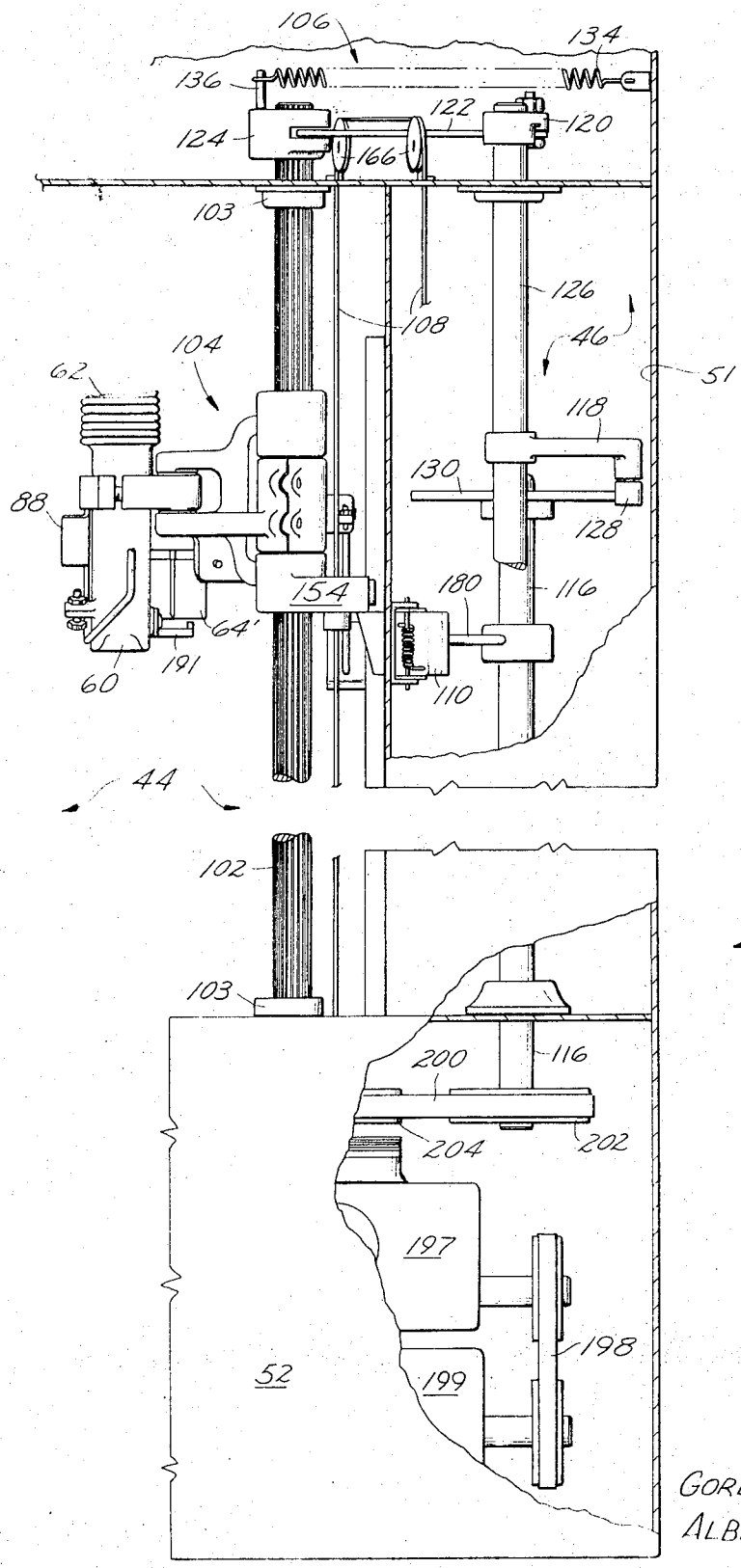

Fig. 1A

INVENTORS
GORDON C. ANDERSON
ALBERT D. HARMON

BY Hunt, Heard & Rhodes

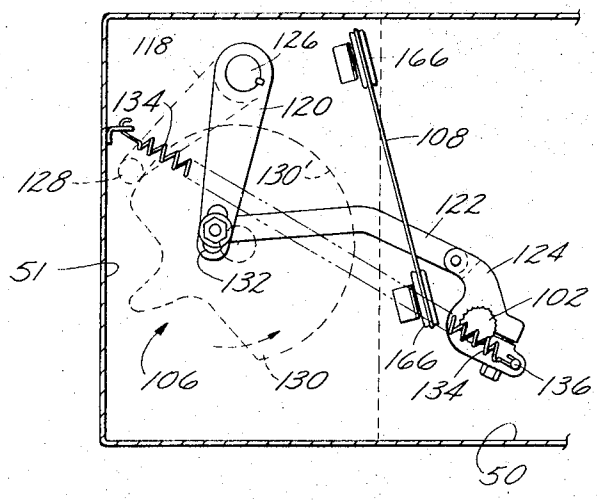

Fig. 3

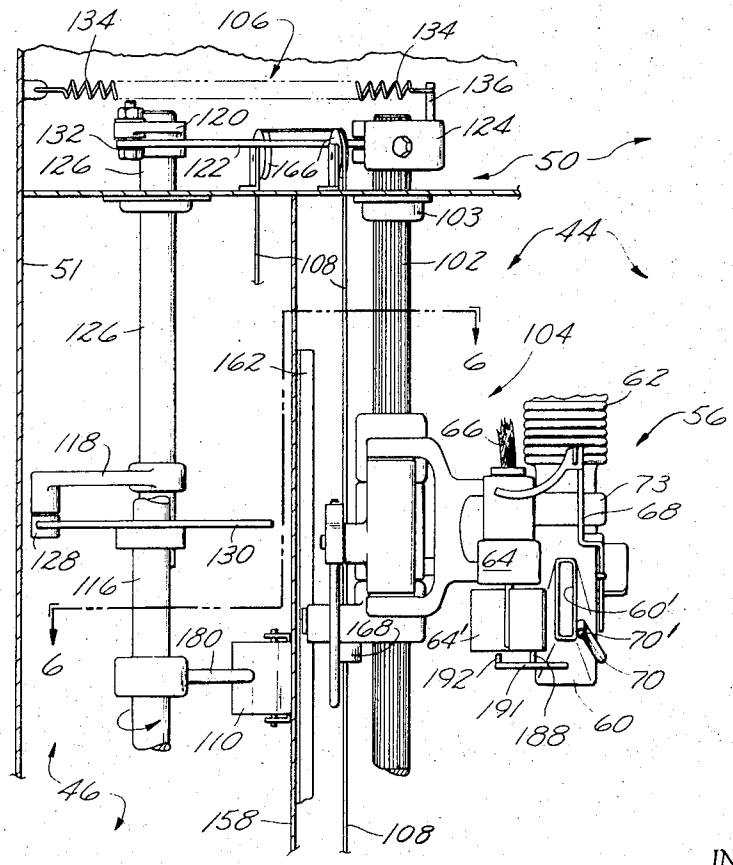

Fig. 2

INVENTORS
GORDON C. ANDERSON
ALBERT D. HARMON
BY Hunt, Heard & Rhode

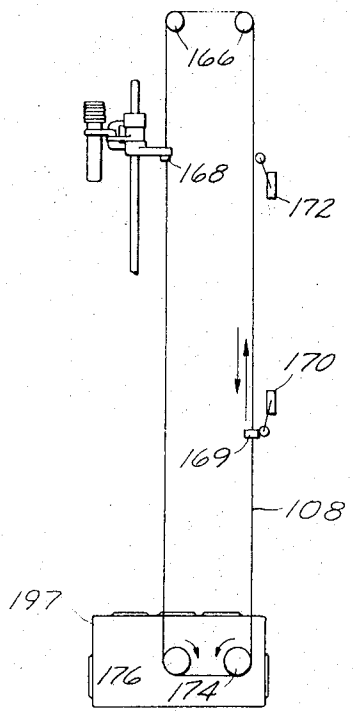

Fig. 4

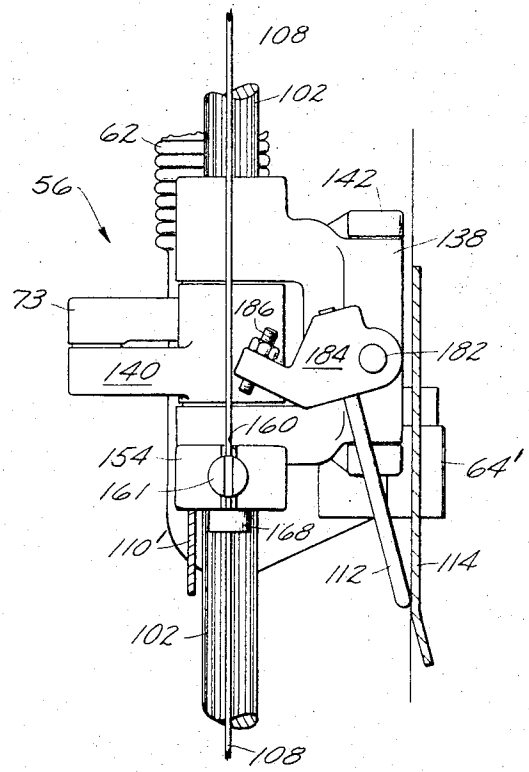

Fig. 5

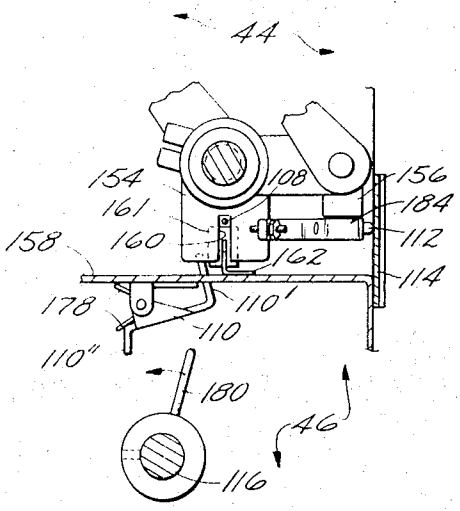

Fig. 6

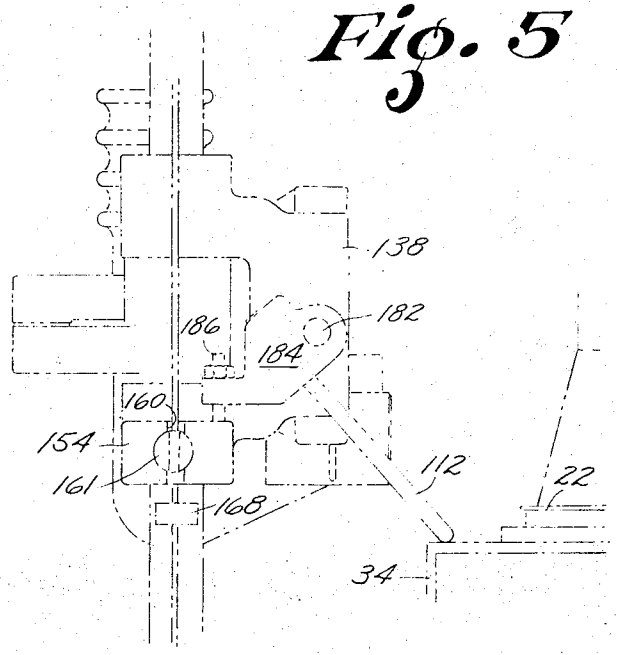

INVENTORS
GORDON C. ANDERSON
ALBERT D. HARMON

BY Hunt, Heard & Rhode

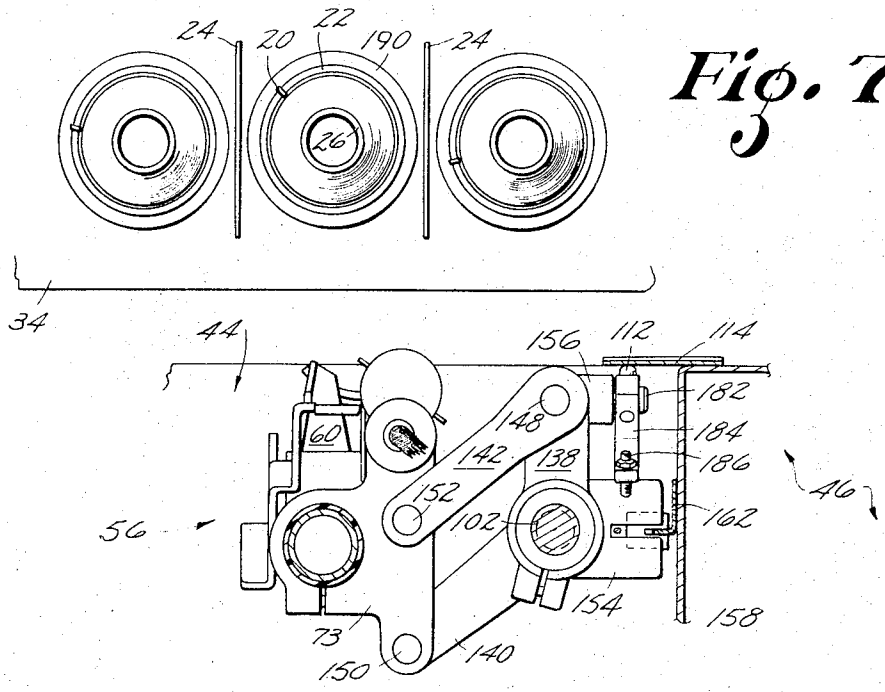

Fig. 7

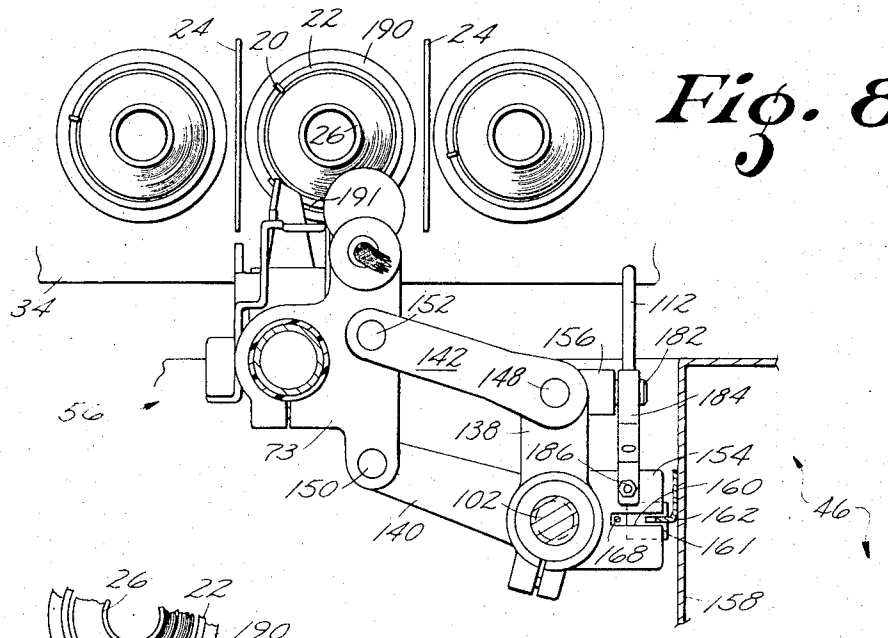

Fig. 8

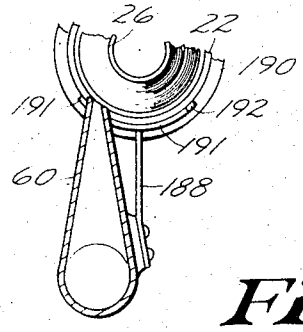

Fig. 9

INVENTORS
GORDON C. ANDERSON
ALBERT D. HARMON
BY Hunt, Heard & Rhodes

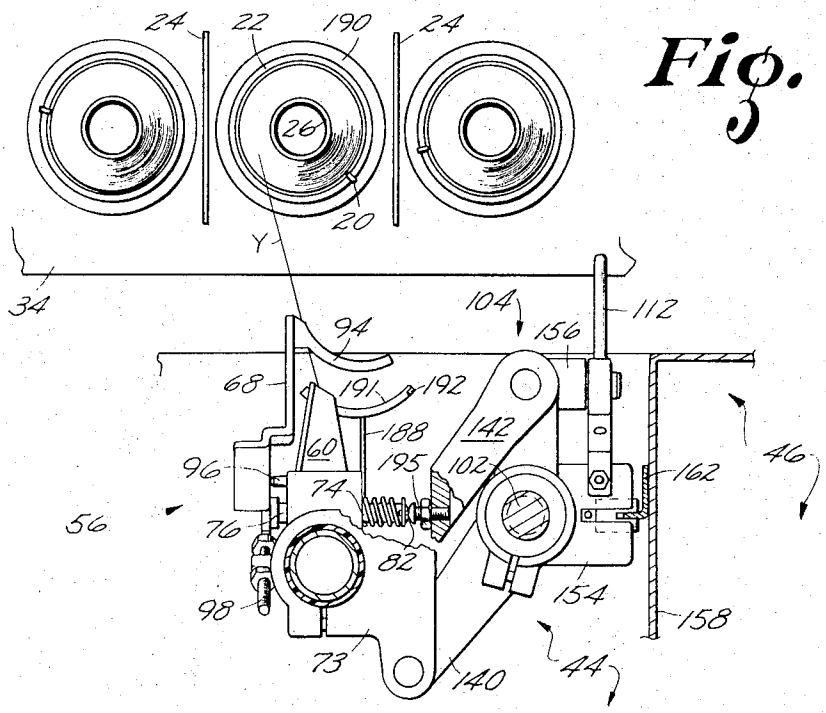

Fig. 10

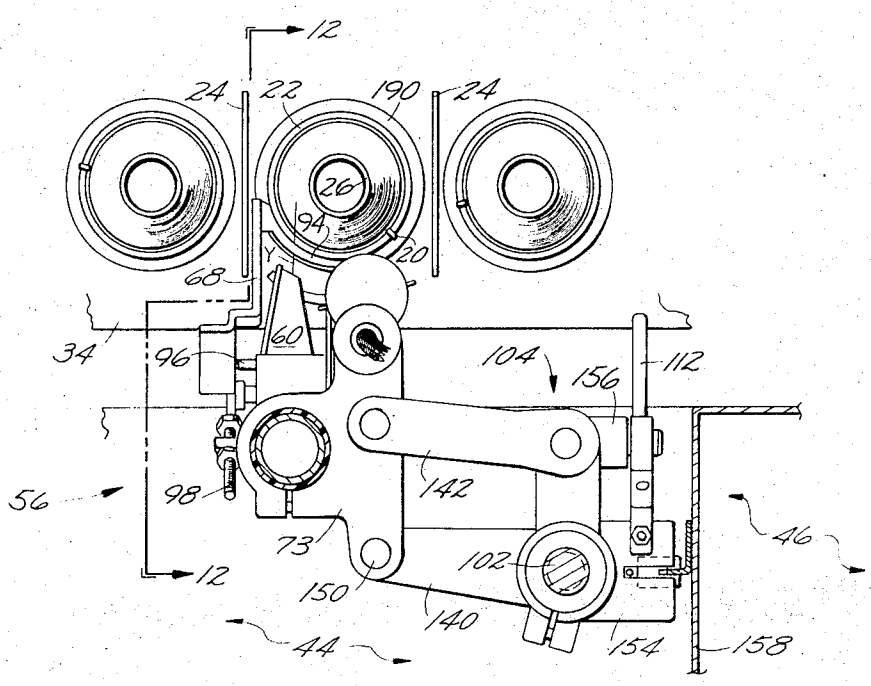

Fig. 11

INVENTORS
GORDON C. ANDERSON
ALBERT D. HARMON

BY Hunt, Heard + Rhodes

Fig. 12

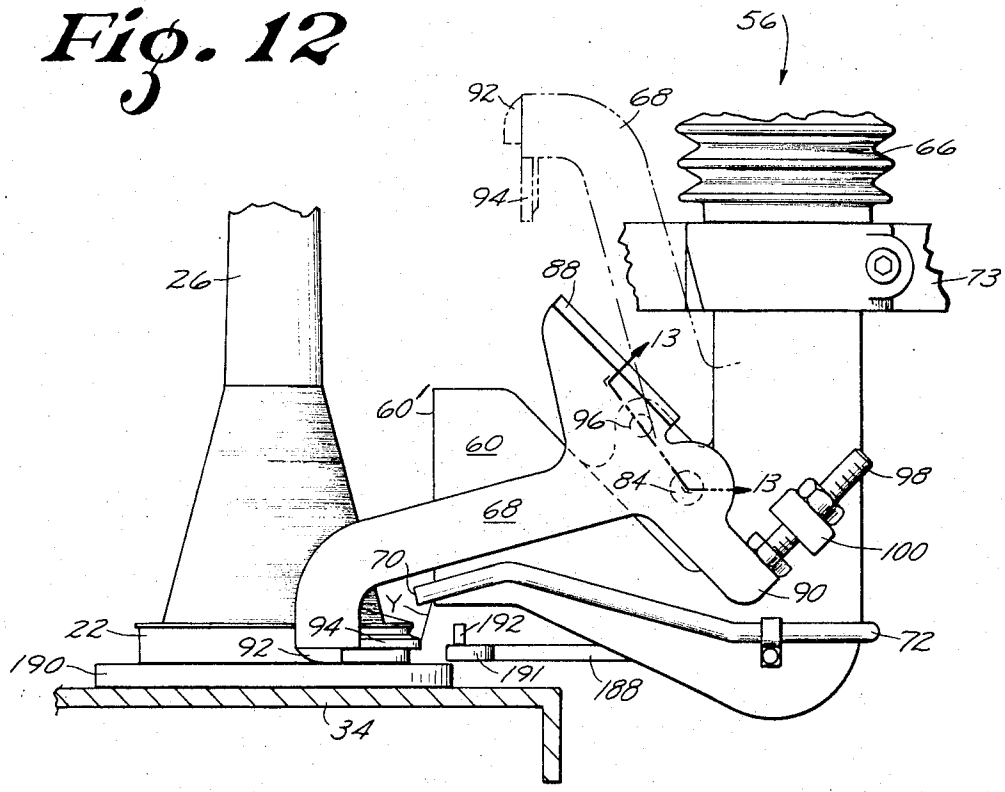

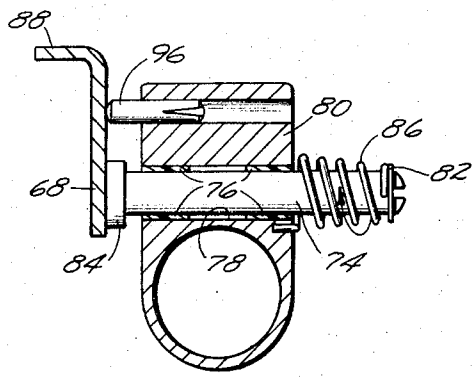

Fig. 13

INVENTORS
GORDON C. ANDERSON
ALBERT D. HARMON
BY Hunt, Hand & Rhode

Fig. 14

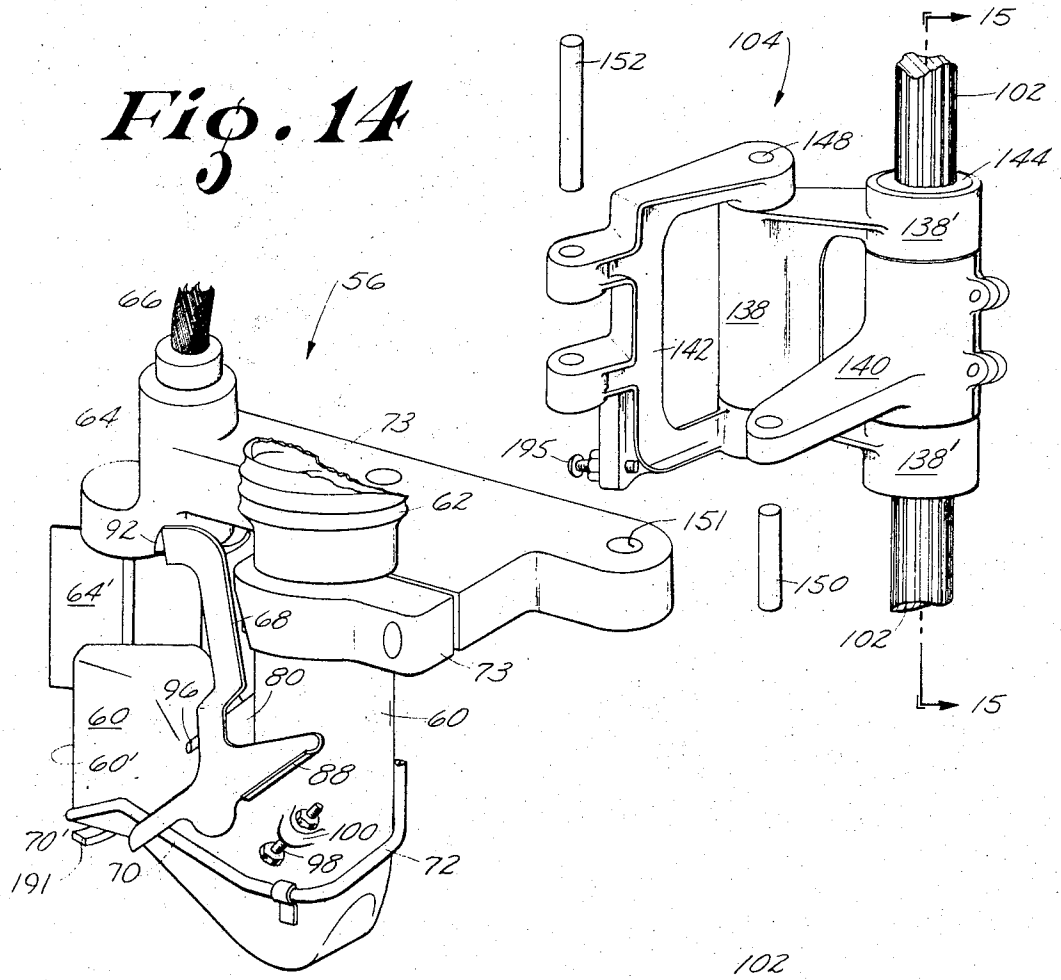

Fig. 15

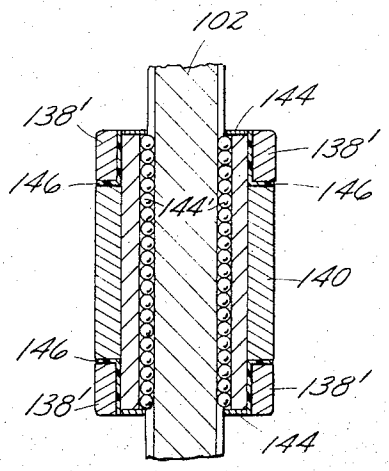

INVENTORS
GORDON C. ANDERSON
ALBERT D. HARMON

BY Hunt, Heard + Rhodes

SERVICING ASSEMBLY FOR AUTOMATIC YARN PIECING APPARATUS

BACKGROUND OF THE INVENTION

This invention relates to the servicing of textile spinning frames or like machines by automatic yarn piecing apparatuses generally of the types disclosed in U. S. Pats. Nos. Re. 26,230, 3,373,551, 3,403,866, 3,486,319 and 3,540,200, and in Japanese Patent Publication No. 5674/1960.

Such apparatus usually includes a mobile carriage which moves longitudinally of the spinning machine, either on a continuous "patrolling" basis or as required on a programmed or demand basis, to a yarn-processing delivery thereof at which there exists an "end-down" or broken-yarn condition. The carriage is stopped adjacent such delivery while servicing mechanisms which it carries operate to eliminate the yarn discontinuity, in any one of several possible ways, and then resumes its movement.

Irrespective of the particular piecing method employed by the apparatus, certain of its functions must be performed in very close proximity to the spinning ring at the machine delivery undergoing servicing. In accordance with one piercing method, for example, a length of the yarn previously spun and wound upon the bobbin encircled by such ring is first withdrawn therefrom by mechanisms which apply a suction force and a beating action to that portion of the surface of the yarn package immediately above the spinning ring. Traveler threading of the withdrawn yarn is then effected by other mechanisms of the apparatus which bring the yarn into desired engagement with the ring's surface and pneumatically propel the traveler about the ring and onto the yarn. Other apparatuses may employ differing piecing techniques, but will in any event similarly include some type of mechanisms for conducting yarn either to or from the ring-encircled bobbin at the delivery underoing servicing, and for in some manner threading the yarn with the traveler movable about such ring.

In a commercially usable piecing apparatus, the servicing assembly embracing such mechanisms for performing the aforesaid functions must be of an extremely compact construction and must possess a high degree of reliability and precision in operation. The mechanisms must perform their functions within a sharply restricted space and in close cooperation with such very small components of the spinning machine as its rings and travelers. Each spinning ring, which itself has a maximum diameter of only a few inches, will oftimes be closely flanked on its opposite sides by anti-ballooning shields or plates which severely restrict the available working area, and the traveler movable about the ring may measure but a fraction of an inch in its greatest dimension. The difficulty of achieving the necessary precise operation of the servicing mechanisms, within such a sharply confined space and in association with such small machine components, is further significantly aggravated by the fact that the latter are not stationary but rather constantly move both upwardly and downward in a vertical direction with the ring rail during operation of the spinning machine. The servicing assembly and its attendant mechanisms therefore must be capable not only of

precise generally-horizontal movement into and out of the confined areas adjacent the spinning rings, while in most cases also providing coordinated movement relative to one another, but additionally must be capable of precise vertical movements in unison with the ring rail of the spinning machine.

Vertical movements of the mechanisms in unison with the ring rail of the spinning machine may be thought to be most easily achieved by permanently connecting the mechanisms, or a supporting frame therefor, to the ring rail as well as to the carriage of the piecing apparatus. If this is done, however, the dead weight of the mechanisms at all times imposes a substantial drag upon the ring rail and/or must be offset by some type of counterbalancing system. Additionally, such permanent affixation of the mechanisms to the ring rail limits movement of the apparatus' carriage to but one side of a single two-sided spinning machine. This in turn disadvantageously restricts the overall utility and efficiency of the piecing apparatus, which might otherwise be capable of additionally servicing the second side of the machine and/or of servicing more than one spinning machine. It also will cause the apparatus to impede or prohibit the performance of other necessary or desired manual or automatic servicing of the spinning machine. If, for example, the piecing apparatus is incapable of movement past one end of the frame of the spinning machine, such machine cannot be serviced by certain types of automatic bobbin donning and doffing equipment now commercially available. In addition to the above described movement capabilities, it is therefore also highly desirable that the servicing mechanisms be movable both into and out of supported relationship with the spinning machine's ring rail.

For commercial usage, all movements of the servicing mechanisms must be achieved rapidly, in proper sequences, and each with a high degree of precision, and be produced by simple and economical components which are reliable, most durable and very easily maintainable in operation. In the latter regard, use of electrical timers, relays, motors and like expensive and complex components must be minimal or avoided entirely, particularly where their use would entail direct exposure to the ofttimes humid and lint-congested atmosphere adjacent the spinning machine being serviced, and/or when used in such a way as to appreciably increase the weight load imposed upon the ring rail of such machine during those times when the rail supports the servicing mechanisms.

OBJECTS OF THE INVENTION

A primary object of the present invention is to provide a compact assembly of servicing mechanisms, of the described type associated with an automatic yarn piecing apparatus, which are so mounted and arranged that all required movements thereof are consistently realized in proper sequence and with good precision by relatively simple components of exceedingly durable, easily maintainable and inexpensive construction.

Another object of the invention is the provision of an assembly of the type described which normally occupies an inoperative position permitting free unobstructed movement of the piecing apparatus past at least one end of the frame of a spinning machine ser-

viced by the apparatus, but which is quickly and easily moved during a piecing operation from its inoperative position to an operative position wherein the assembly is supported by a ring rail of the spinning machine for vertical movement in unison therewith, and which is of such light-weight and compact construction as to impose only a negligible load upon the ring rail when in its operative position even without the assistance of counterbalancing systems or the like.

A related object is the provision, in association with a servicing mechanism of the type described, of a support member which is automatically movable between retracted and extended positions in response to movement of the assembly to and from its aforesaid inoperative and operative positions, the support member when in its retracted position being disposed closely adjacent the carriage of the piecing apparatus and when in its extended position projecting from such carriage for engagement with a ring rail of the spinning machine being serviced by the apparatus. A further object is to provide means in association with the aforesaid support member whereby the elevation of the servicing assembly, when in its operative position, can be precisely adjusted as desired relative to the supporting ring rail of the spinning machine.

A more specific object of the invention is to provide a servicing assembly of the described type which is so constructed and mounted that various horizontal movements of the assembly toward and away from the spinning machine, and also relative movement between certain servicing mechanisms of the assembly, can be quickly and easily produced by simple rotary movement of an upright shaft upon which the assembly is supported for free vertical travel. A related object is the provision, in association with such an assembly, of cam means engageable with components of the spinning machine during horizontal movement of the assembly theretoward for insuring accurate alignment between certain servicing mechanisms of the assembly and related components of the spinning machine during each piecing operation.

Additional objects of the invention will be in part evident and in part pointed out hereinafter.

SUMMARY OF THE INVENTION

In a preferred embodiment of the invention, a servicing assembly of the described type is mounted by a compound bracket upon a rotatable splined shaft carried by the mobile carriage of the piecing apparatus. The assembly and bracket are movable axially of the shaft, which extends vertically parallel to and throughout the entire extent of the path of movement of the ring rail of the spinning machine serviced by the apparatus. The assembly and bracket are normally maintained in an elevated inoperative position upon the shaft by a spring-biased latch mechanism. At the outset of a piecing operation, release of the latch allows the assembly and bracket to descend by gravity along the shaft. In automatic response to such downward movement, a support member extends outwardly from the compound bracket into an overlying relationship with the ring rail of the spinning machine. Downward movement of the assembly continues until the support member engages the ring rail and supports the bracket and assembly for vertical movement in unison therewith. Adjustment means associated with the support member permit precise adjustment of the elevation of the assembly relative to the ring rail at this time. In response to simple rotation of the splined shaft, realized by linkage means interconnecting such shaft and the control cam system of the piecing apparatus, the assembly is then extended toward and retracted away from the spinning frame by the compound bracket in the sequence and with the precision required for the various servicing mechanisms to perform their intended functions. By extreme retraction of the assembly in the same manner, relative movement between certain of the assembly's servicing mechanisms is also realized. When all of the various mechanisms of the assembly have completed their intended functions adjacent the ring rail of the spinning machine, a cable passing through the bracket raises both the bracket and the assembly upwardly toward their elevated inoperative position. As the assembly and bracket return to such elevated position, they are automatically latched and held there by the latch previously mentioned. Additionally, the previously extended support member is automatically retracted, by a cam mounted upon the carriage of the apparatus, to an unobstructive position, thus once again leaving the carriage free for movement past an end of the spinning machine.

While principles of the invention are applicable to servicing assemblies having other types of servicing mechanisms, those mechanisms of the servicing assembly embodiment hereinafter described include suction head and beater mechanisms for freeing and withdrawing a length of the yarn previously wound upon the bobbin at the delivery undergoing servicing, and air-blast and depressor mechanisms for threading such yarn with the ring-mounted traveler at such delivery. In such embodiment the assembly, following vertical movement thereof to its operative position during each piecing operation, is first advanced so as to bring the suction head and beater mechanisms closely adjacent that surface of the bobbin-yarn package located above and radially inwardly of the spinning ring at the spinning machine delivery undergoing servicing, thereby causing the free end and a succeeding length of the yarn wound upon such package to be withdrawn into the suction head. The servicing assembly is then retracted to withdraw the aforesaid mechanisms, and the depressor mechanism is moved downwardly past the mouth of the suction head and into engagement with the length of yarn extending therefrom. The assembly is then again advanced to bring the depressor and air-blast mechanisms and the engaged yarn toward the spinning ring for traveler threading purposes. In accordance with the present invention, the advancement and retraction of the assembly are realized by simple rotary movement of the splined shaft along which the assembly is vertically movable, and the downward movement of the depressor relative to the suction head mechanism is produced automatically by the immediately preceding retraction of the assembly. Precise positioning of the suction head and depressor mechanisms relative to the spinning ring is achieved during the respective first and second advancements of the assembly by cam elements provided in association with such mechanisms and engageable with such ring

and the ring rail's holder therefor, respectively. The cam elements properly space the suction head and yarn depressor relative to the spinning ring for yarn withdrawing and traveler threading purposes, notwithstanding possible minor misalignments which at some deliveries might otherwise defeat the yarn withdrawing or traveler threading operations.

DESCRIPTION OF THE DRAWINGS

Other features and advantages of the invention will be apparent from the following description of a preferred embodiment thereof, which should be read in conjunction with the accompanying drawings, in which:

FIG. **1** is a rear elevational view of an automatic yarn piecing apparatus connected to a shown textile spinning frame or like machine and mounting a servicing assembly in accordance with the invention;

FIG. **1A** is an enlarged rear elevational view, with some components partially broken away, of the aforesaid servicing assembly and associated components of the piecing apparatus of FIG. **1**;

FIG. **2** is a fragmentary front elevational view, partially in vertical section, of the servicing assembly and some of the associated components shown in FIG. **1A**;

FIG. **3** is a top plan view taken from FIG. **2** and showing a movement-transmitting linkage associated with the assembly;

FIG. **4** is a partially diagrammatic rear elevational view of a cable system employed to move the assembly vertically;

FIG. **5** is an enlarged side elevational and partially sectional view showing in solid lines a bracket and support member associated with the assembly and occupying an elevated position wherein the support member is retracted, and showing the same components in phantom lines at a lower elevation whereat the support member is extended and in engagement with the ring rail of the spinning machine;

FIG. **6** is a fragmentary view, primarily in top plan but partially in horizontal section, taken substantially along line **6-6** of FIG. **2** and reoriented ninety degrees in a counterclockwise direction therefrom;

FIGS. **7**, **8**, **10** and **11** are top plan views, partially in horizontal section and partially broken away in FIG. **10**, showing the servicing assembly and adjacent components in the positions sequentially occupied by them during a typical cycle of operation, a fragmentary portion of the ring rail and associated parts of the spinning frame also being shown;

FIG. **9** is a fragmentary view, partially in top plan and partially in horizontal section, supplementing and showing a component hidden from view in FIG. **8**;

FIG. **12** is an enlarged side elevational view, partially in vertical section and partially broken away, taken from and looking in the direction of the arrows **12—12** of FIG. **11**;

FIG. **13** is an enlarged fragmentary section taken substantially along line **13—13** of FIG. **12**;

FIG. **14** is an enlarged rear perspective view showing in exploded relationship the assembly and the mounting bracket therefor; and

FIG. **15** is a fragmentary vertical section taken generally along line **15—15** through the mounting bracket of FIG. **14** and showing the bushing therefor.

DESCRIPTION OF THE PREFERRED EMBODIMENT

The spinning machine **10** fragmentarily shown in FIG. **1** is of a conventional type having a plurality of yarn processing deliveries along each of its opposite sides. At each delivery of machine **10**, yarn as roving normally passes downwardly from creel **12** through sets of drafting rolls **14**, a guide member **16**, a balloon control ring **18**, and a traveler **20** (FIGS. **7–12**) movable about a spinning ring **22** flanked by anti-ballooning plates **24**. The spun yarn is then wound upon a bobbin **26** projecting axially upwardly through ring **22**, such bobbin being removably seated upon an upright spindle **28** which is rotated at its lower end portion by a drive tape **30**. On the side of machine **10** fragmentarily shown in FIG. **1**, all spindles **28** are supported by a stationary spindle rail **32**, and all spinning rings **22** and plates **24** are supported by a ring rail **34** which is moved vertically relative to spindle rail **32**, spindles **28** and bobbins **26** to traverse the yarn longitudinally of bobbins **26** as it is wound thereon following passage through travelers **20**. The same arrangement of components is present on the opposite side of machine **10** not shown in FIG. **1**.

The yarn piecing apparatus **36** shown in FIG. **1** comprises a mobile carriage **38** connected in any suitable manner, as by a track **40** and overhead rail **42**, to spinning machine **10** (and possibly to other similar machines) for movement longitudinally of and closely adjacent at least one side of the machine, and preferably past at least one end thereof, to any one of its yarn processing deliveries requiring servicing by reason of an end-down condition thereat. Carriage **38** includes an open center section **44** and four enclosed housing-like sections **46,48,50,52**, the sections **46,48** being disposed on opposite sides of open center section **44** and the sections **50,52** being above and below the same. Repair of the yarn discontinuity at a delivery of machine **10** requiring servicing is effected by various servicing mechanisms which are mounted within open center section **44** of carriage **38** for movement therefrom toward and away from machine **10**. These include a spindle rotation control mechanism **54** operable adjacent the elevation of the machine's spindle rail **32** for controlling the directions and speeds of rotation of the spindle **28** and bobbin **26** at the delivery undergoing servicing; a yarn withdrawing and traveler threading assembly **56** including a plurality of mechanisms operable adjacent the elevation of the machine's ring rail **34** for the withdrawing and traveler threading of a length of spun yarn from the delivery's bobbin **26**; and a yarn end joining or piecing mechanism **58** operable adjacent the elevation of the machine's drafting rolls **14** for joining the aforesaid length of spun yarn to the roving yarn issuing from such rolls at the delivery.

The present invention is directed to the mounting of and components associated with mechanisms such as those of assembly **56**, which must be capable of multidirectional movement to achieve the precise positioning of said assembly and of said mechanisms adjacent to and within the confined areas adjacent a spinning ring **22** on the spinning machine's vertically moving ring rail **34**.

Referring now also to FIGS. **1A**, **2**, **12** and **14**, the servicing mechanisms of assembly **56** include a suction

head **60** connected to one end of a flexible conduit **62**, a beater device **64** connected to one end of a flexible drive shaft **66**, a yarn depressor **68** having an elongate main body portion, and an air nozzle **70** connected to a flexible tube **72**. Conduit **62**, drive shaft **66** and tube **72** respectively extend to an air-suction source, a drive means and a compressed-air source disposed within the enclosed sections of carriage **38** and actuable by associated controls to produce, at desired times and for purposes subsequently discussed, a suction air-flow into the mouth **60'** of head **60**, rotation of the flexible blade **64'** of beater **64**, and emission of a blast of air from the open end **70'** of nozzle **70**. The aforesaid air sources and drive means and their related controls may be of any suitable type, and are not shown in the drawings.

Suction head **60**, beater **64**, depressor **68** and nozzle **70** are all carried directly or indirectly by a frame-plate **73** (FIG. **14**) of assembly **56** for movement together as a unit toward and away from and vertically upward and downward relative to the spinning machine.

Beater **64** and nozzle **70** are fixedly mounted on opposite sides of and closely adjacent to mouth **60'** of suction head **60**, which faces machine **10**. Depressor **68** is mounted for pivotal movement in a substantially vertical plane relative to the aforesaid components, and particularly suction head **60**, by mounting means best shown in FIGS. **12** and **13**. Such mounting means includes a pivot pin **74** slidably and rotatably mounted by suitable bearings **76** within a bore **78** provided through a thickened pad **80** upon suction head **60**. The opposite ends of pin **74** project axially beyond the extremities of bore **78** and are respectively provided with enlarged stop elements **82,84** which limit the extent of the pin's axial sliding movement relative to suction head **60**. A compression and torsion spring **86** encircles that portion of pin **74** between pad **80** and stop **82**, and is secured at its opposite ends to such elements. Spring **86** biases pin **74** in an axial direction, to the right as viewed in FIG. **13**, normally resiliently maintaining the other stop element **84** in abutment with pad **80**, and also biases the pin for rotation about its axis in the direction indicated by the arrow in FIG. **13**. Depressor **68** is welded or otherwise rigidly secured adjacent one end to stop element **84** of pin **74**, for pivotal movement with and about the axis of the pin between the elevated and lowered positions of the depressor respectively shown in phantom lines (partially) and solid lines in FIG. **12**. Depressor **68** has flanges **88,90** formed integrally therewith adjacent its aforesaid one end, while its other end is provided with a downwardly projecting cam element **92** and with a laterally extending flange **94**, the latter having an arcuate shape (best shown in FIGS. **10** and **11**) complementary to spinning rings **22**. Depressor **68** normally occupies the elevated inoperative position shown by phantom lines in FIG. **12**, wherein its aforesaid arcuate flange **94** is disposed above and rearwardly of mouth **60'** of suction head **60**. The depressor is releasably maintained in such position, although subject to the torsional biasing force exerted by spring **86**, by a pin **96** (FIGS. **10–14**) carried by and projecting laterally from suction head pad **80** in spaced parallel relationship to pivot pin **74**. When depressor **68** is in its elevated position and stop **84** of pivot pin **74** is in abutting relationship with pad **80**, pin **96** underlies and engages the lower edge of the depressor's main body portion to hold the depressor in such position. However, as may be seen in FIG. **13**, axial movement of pivot pin **74** to the left shifts depressor **68** laterally beyond the free end of pin **96**. This permits the depressor to pivot downwardly, under the impetus of the torsional force of spring **86** and about the axis of pin **74**, to its solid-line lowered position of FIG. **12**. The depressor's downward pivotal movement is arrested by engagement of its inner-end flange **90** with an adjustable stop-bolt **98** threadably secured to a projecting ear **100** upon suction head **60**. When return movement of depressor **68** back to its elevated position again brings its lower edge past pin **96**, which latter in the meantime has merely slidably engaged the adjacent vertical side of depressor **68**, spring **86** shifts pivot pin **74** to the right and thereby again causes the depressor to overlie and be supported by pin **96** in such elevated position.

The other components of piecing apparatus **36** which are provided in association with assembly **56** and will now be described consist generally of the following: assembly mounting means including an upright splined shaft **102** (FIGS. **1–6** and **14**) and a compound bracket **104** (FIGS. **1A**, **2**, **14** and **15**) mounting assembly **56** upon and for multidirectional movement relative to carriage **38**; assembly moving means including a spring **134** (FIGS. **1A–3**), linkage **106** (FIGS. **1A–3**) and cable **108** (FIGS. **1A–4**) for imparting movement to the assembly; releasable latching means including a latch **110** (FIGS. **1A**, **2** and **6**) for releasably maintaining assembly **56** when inoperative in an elevated position above the maximum elevation of ring rail **34** of spinning machine **10**; assembly support means including an extendable and retractable rod-like member **112** (FIG. **5**) adapted to at desired times engage ring rail **34** and support assembly **56** for movement in unison therewith; and assembly support control means including a cam plate **114** (FIG. **5**) for effecting the extension and retraction of member **112** in automatic response to movement of assembly **56** to and from its aforesaid elevated position.

Referring now more specifically to FIGS. **1–3**, splined shaft **102** extends vertically throughout the entire height of open center section **44** of carriage **38** at a location therein offset toward the rear (distal from spinning machine **10**) of the carriage and its enclosed side section **46** (to the right as viewed in FIGS. **1** and **1A**). Suitable bearings **103** carried by sections **50,52** of carriage **38** support shaft **102** for rotary movement about its axis. The upper end portion of shaft **102** projects into housing-like section **50** of carriage **38**, and is connected by linkage **106** to a cam shaft **116** mounted within carriage section **46** and constituting, in accordance with known practices, a standard part of the overall control system of piecing apparatus **36**. Linkage **106** includes a plurality of levers **118,120,122** and **124**, and a rocker shaft **126** on which levers **118** and **120** are mounted, shaft **126** being mounted within carriage section **46** in spaced parallel relationship to cam shaft **116** and projecting above shaft **116**. Lever **118**, keyed or similarly affixed at one end to rocker shaft **126**, at its opposite end carries a cam follower **128** engageable with a cam **130** mounted upon and rotatable with cam shaft **116**. The upper end portion of shaft **126** projects into carriage section **50** and is there joined by levers

120, 122,124 to the upper end portion of splined shaft 102, the levers 120,124 being rigidly affixed at one end to the respective shafts 126,102 and being pivotally interconnected by the remaining lever 122. The connection 132 between levers 120,122 is, preferably and as shown, of a slot-and-bolt or equivalent type permitting adjustment of its distance from shaft 126 for the purpose of readily adjusting as desired the throw of linkage 106. Resilient means such as coil spring 134, which is connected at one end to side wall 51 of carriage section 50 and at its opposite end to a stud 136 upon lever 124, biases shafts 102,126 in clockwise and counterclockwise directions, respectively. The counterclockwise bias upon shaft 126 urges follower 128 of lever 118 into peripheral engagement with cam 130 of cam shaft 116. When rotation of cam shaft 116 brings a high-dwell segment of cam 130 into engagement with follower 128, it will be apparent that shaft 102 will be rotated in a counterclockwise direction about its axis by linkage 106 against the bias of spring 134. Alternatively, rotation of shaft 102 in the opposite or clockwise direction will occur under the impetus of spring 134 when a low-dwell segment of cam 130 passes into engagement with follower 128.

Assembly mounting compound bracket 104, best shown in its entirety in FIG. 14, is connected to that portion of shaft 102 within open center carriage section 44. Bracket 104 includes a yoke-like base section 138 and two lever-arm sections 140,142. Shaft 102 extends through aligned bores provided within the vertically spaced legs 138' of yoke-like section 138 and within an end of lever section 140 disposed between such legs. A bushing 144 (FIG. 15) provided within the aforesaid bores has captive columns of ball bearings 144' received in the grooves between circumferentially adjacent splines of shaft 102. Bearings 144' permit free vertical movement of bushing 144 and with it bracket sections 138,140 as a unit longitudinally of shaft 102, but constrain bushing 144 to rotate in unison with the shaft. Lever section 140 of bracket 104 is clamped or otherwise rigidly secured to bushing 144, and therefore pivots in a substantially horizontal arc about the axis of shaft 102 in response to rotation of the shaft. Suitable bearings 146 provided between bracket section 138, on the one hand, and bushing 144 and bracket section 140, on the other hand, permit relative rotation therebetween, such that section 138 is not constrained to pivot or rotate with shaft 102.

Bracket section 138 projects radially from shaft 102 to a point closely adjacent the front (adjacent machine 10) open face of carriage section 44, and bracket section 142 is pivotally connected to the free end of section 138 by a vertical pivot pin 148 (see also FIGS. 7–11). Bracket sections 140,142 extend in spaced parallel relationship to one another, from shaft 102 and pin 148 respectively, and at their free outer ends support servicing assembly 56, to the frame-plate 73 of which they are respectively pivotally connected by vertical pivot pins 150,152. The bore 151 provided within frameplate 73 for reception of pivot pin 150 has a diameter sufficiently greater than the diameter of pin 150 to permit, for purposes subsequently discussed, some lateral movement of frame-plate 73 relative to pin 150 and bracket section 140.

On the opposite side of shaft 102 from assembly 56, a pair of bosses 154,156 (FIGS. 5 and 6) project laterally from bracket section 138 toward the vertical carriage wall 158 separating carriage sections 44,46. A vertical slot 160 and associated bushing 161 provided within boss 154 receive the outstanding flange of a guide member 162 (FIGS. 1A, 2 and 6) secured to and extending for substantially the entire height of wall 158 in parallel relationship to shaft 102. The foregoing insures that, irrespective of the vertical position of bracket 104 upon shaft 102, rotation of the latter will not produce pivotal movement of the bracket's base section 138.

The portion of slot 160 inwardly of bushing 161 provides a passage through boss 154 for cable 108. As is best shown in FIGS. 1A–4, cable 108 is entrained about suitable guide pulleys, such as those identified by the numeral 166 (FIGS. 2–4), so as to be movable in a closed path of travel through carriage sections 44,46,50 and 52. Within open center section 44 of carriage 38, cable 108 passes loosely through slot 160 of bracket boss 156 in coextensive parallel relationship to shaft 102, and carries a lug 168 adapted to abut the undersurface of such boss. A similar lug 169 upon that portion of cable 108 within carriage section 46 is adapted to at desired times alternately engage vertically-spaced limit switches 170,172 (FIG. 4) mounted within such carriage section. Within lower section 52 of carriage 38, cable 108 is wrapped a plurality of times about each of a pair of rotatable drive capstans 174,176 (FIG. 4). Capstans 174,176 project from the gear box 197 (FIGS. 1, 1A and 4) of piecing apparatus 36, which gear box is driven by a belt 198 from the main drive motor 199 of apparatus 36. Rotation of capstans 174,176 is controlled by suitable electrical systems which include limit switches 170,172 (FIG. 4) respectively. Capstan 174 rotates counterclockwise when actuated, driving cable 108 in a direction moving lug 168 downwardly within carriage section 44 and lug 169 upwardly within carriage section 46. As lug 168 nears the bottom of carriage section 44, lug 169 engages and trips limit switch 172, deactivating capstan 174 and thus halting cable 108. The elevation of lug 168 at this time is below the minimum elevation reached during normal operation by ring rail 34 of spinning machine 10. Capstan 176 rotates in a clockwise direction when actuated, driving cable 108 in the opposite direction and causing upward movement of lug 168 and downward movement of lug 169. Engagement between the undersurface of boss 156 and lug 168 causes upward movement, with the lug and along shaft 102, of compound bracket 104 and the servicing assembly 56 carried by the bracket. As the aforesaid components near the top of carriage section 44, engagement of limit switch 170 by lug 169 deactivates capstan 174 and thus halts cable 108. The elevated position then occupied by bracket 104 and assembly 56, shown in FIGS. 1, 1A, 2 and 4, is considerably above the maximum elevation reached by ring rail 34 of machine 10.

Bracket 104 and assembly 56 are releasably maintained in their aforesaid elevated position by latch 110 which, as is best shown in FIGS. 1A, 2 and 6, is pivotally mounted within carriage section 46 adjacent a small opening provided through wall 158. Resilient means in the form of a spring 178 biases latch 110 in a

counterclockwise direction such that a vertically tapered endcflange 110′ thereof projects through the adjacent wall-opening and into open center section 44 of carriage 38. At its opposite end, another flange 110″ of latch 110 projects into the path of movement of a latch release finger 180 carried by cam shaft 116. As bracket 104 moves upwardly to an elevated position, its boss 154 engages tapered flange 110′ of latch 110 and pivots the latch clockwise out of its path of travel. As the undersurface of boss 154 passes above flange 110′ of latch 110, the latter is automatically biased into underlying relationship with the former by spring 178. The engagement between the undersurface of boss 154 and the top of latch flange 110′ then maintains bracket 104 and assembly 56 in their elevated position until the latch is released, through engagement of its inner flange 110″ by the finger 180 upon cam shaft 116, even though in the meantime cable lug 168 may have passed downwardly out of engagement with boss 154 of bracket 104.

Referring now particularly to FIGS. 5–8, a horizontally-extending pivot pin 182 and interconnecting counterweight arm 184 secure rod-like support member 112 to boss 156 of bracket section 138 for pivotal movement between retracted and extended positions respectively illustrated in solid and phantom lines in FIG. 5. The center of gravity of arm 184 and support member 112 is so located in relation to the axis of pin 182 that the former are biased about the latter toward their laterally-extended position shown in phantom lines in the lower portion of FIG. 5. In such position an adjustable stopbolt 186 carried by arm 184 engages boss 154 of bracket section 138, and support member 112 extends from carriage 38 into overlying relationship with ring rail 34 of spinning machine 10. The effective elevation of the forward end portion of member 112, when in its extended position, may of course be varied as desired by adjustment of bolt 186. When bracket 104 is moved upwardly along shaft 102 to the elevation thereof shown in solid lines in FIG. 5, support member 112 engages and is pivoted inwardly to its retracted position by stationary cam means in the form of a plate 114, which projects at such elevation from the rear wall of carriage section 46 in the direction of open center section 44 of the carriage. The lower edge of cam plate 114 preferably flares slightly forwardly, in the direction of machine 10, as shown in FIG. 5.

In lieu of the above described construction, member 112 might be biased to its extended position by a spring or some other type of biasing means. Also, adjustment screw 186 might with equal effectiveness be carried upon the forward end portion of member 112, rather than upon arm 184, in which event arm 184 would directly engage boss 154 of bracket section 138 upon extension of member 112.

MODE OF OPERATION

When piecing apparatus 36 is not engaged in a yarn piecing operation, servicing assembly 56 then occupies its vertically elevated and horizontally retracted inoperative position illustrated in FIGS. 1–7 (solid-line showing only in FIG. 5). Latch 110 underlies and supports bracket 104. Cam shaft 116 is stationary, and follower 128 of linkage 106 engages a radial segment 130′ of cam 130. Support rod 112 is retracted by cam plate 114. Since rod 112, bracket 104 and assembly 56 are contained virtually entirely within the open center section 44 of carriage 38 of apparatus 36, apparatus 36 may move freely closely adjacent and longitudinally of spinning machine 10, and if desired past one or both of its opposite ends, to any yarn processing delivery of the spinning machine requiring servicing by reason of an end-down condition thereat.

At the outset of a piecing operation at such a yarn processing delivery of machine 10, illustratively the center delivery shown in FIGS. 7–11, rotation of cam shaft 116 causes finger 180 to release latch 110 (FIG. 2). Cam shaft 116 is rotated by a belt 200 (FIGS. 1 and 1A) entrained about a pulley 202 affixed to the lower end of shaft 116 and about a drive pulley 204 of gear box 197, the rotation of drive pulley 204 being controlled by the electrical control circuitry (not shown) of apparatus 36. At approximately the same time as latch 110 is released, or if desired at any convenient previous time, actuation of capstan 174 (FIG. 4) drives cable 108 until its lug 168 nears the bottom of carriage section 44 and its lug 169 engages limit switch 172. Since no longer held in its elevated inoperative position, bracket 104 descends by gravity along shaft 102. The rate of such descent may be limited, if necessary or desired, by not actuating cable capstan 174 until latch 110 is released. During the initial part of the bracket's descent, support member 112 passes out of engagement with cam plate 114 and is thereupon automatically biased to its extended position illustrated in phantom lines in FIG. 5. Descent of bracket 104 and the assembly 56 carried by it continue until support member 112 engages ring rail 34 of spinning machine 10. Upon such engagement, which will occur irrespective of the vertical position then occupied by ring rail 34, support member 112 supports bracket 104 and assembly 56 for vertical movement in unison with the ring rail.

Following engagement between member 112 and ring rail 34, further rotation of cam shaft 116 brings a low-dwell segment of cam 130 (FIGS. 1A–3) adjacent follower 128, causing splined shaft 102 to be rotated in a clockwise direction under the impetus of spring 134. Such rotation pivots bracket lever 140 toward spinning machine 10, resulting in corresponding pivotal movement of bracket lever 142 and advancement of assembly 56 from its retracted position of FIG. 7 to its extended position of FIG. 8.

The aforesaid advancement of assembly 56 is arrested by a stop element 188 (FIGS. 2, 9 and 12) mounted upon any convenient part of assembly 56 beneath and rearwardly of mouth 60′ of suction head 60. At its forward end element 188 has an arcuate cam member 191 adapted to matingly engage the cylindrical outer surface of the spinning ring 22, of the yarn processing delivery of machine 10 undergoing servicing, at an elevation below the path of travel of the traveler 20 about the conventional traveler flange provided at the ring's upper edge. Engagement at such elevation is assured by initial appropriate adjustment of the screw 186 (FIG. 5) associated with support member 112 of assembly 56. A small tab element 192 extends upwardly from the right end of cam member 191, as viewed in top plan in FIG. 9, for engagement with the traveler flange of spinning ring 22 at such time

as member **191** engages as aforesaid the ring's cylindrical outer surface.

The engagement of cam member **191** with spinning ring **22** both halts the advancement of assembly **56** and, if necessary, laterally realigns the assembly so that mouth **60'** of its suction head mechanism **60** and blade **64'** of its beater mechanism **64** are disposed closely adjacent the surface of the spun yarn wound upon bobbin **26** immediately above spinning ring **22**, as shown in FIG. **8**. The realignment of assembly **56** occurs automatically, if required and upon engagement of cam member **191** with spinning ring **22**, due to the complementary curvatures of such components and due to the lateral-movement capability afforded assembly **56** by the previously mentioned differences in diameter between the bore **151** and the pin **150** (FIG. **14**) interconnecting frame-plate **73** of assembly **56** and lever **140** of compound bracket **104**.

While assembly **56** is positioned as shown in FIG. **8**, the energization for desired periods of time of suction head **60**, beater **64** and the piecing apparatus' spindle-control mechanism **54** (FIG. **1**) cause the free end and a succeeding length of the spun yarn upon bobbin **26** to be withdrawn by and into suction head **60**, and thereafter into suction-head conduit **62**. Also while assembly **56** is in its FIG. **8** position, a blast of air momentarily emitted from the open end **70'** of nozzle **70** (FIGS. **2**, **12** and **14**) sweeps in a clockwise direction about the interior surface of spinning ring **22** and propels traveler **20** about the ring's traveler-flange, in a clockwise direction and from whatever random position upon the flange that traveler **20** might previously have occupied, to a position of engagement with the tab **192** extending upwardly from the right end of cam member **191**. The foregoing yarn-withdrawing and traveler-positioning operations are known, and further description thereof is therefore unnecessary.

After completion of the aforesaid operations, assembly **56** is moved from its extended position of FIG. **8** to an extreme retracted position illustrated in FIG. **10**. Such movement is produced by linkage **106** (FIGS. **1A**, **2** and **3**) rotating splined shaft **102** in a counterclockwise direction in response to further rotation of cam shaft **116** bringing a high-dwell segment of cam **130** adjacent follower **128**. The movement of assembly **56** to its extreme retracted position causes engagement between stop element **82** of yarn depressor pivot pin **74** (FIGS. **10** and **13**) and a bolt-type actuator **195** (FIGS. **10** and **14**) carried by and projecting an adjustably-variable distance laterally from lever section **142** of compound bracket **104**. Such engagement shifts pin **74** and depressor **68** to the left, such that the depressor moves laterally out of supported engagement with pin **96** (FIGS. **12–14**) and pivots downwardly as previously described from its elevated position to a generally horizontal position. As depressor **68** descends, the arcuate flange **94** at its free end passes closely adjacent mouth **60'** of suction head **60** and into overlying engagement with the length of spun yarn, designated Y in FIG. **10**, then extending from bobbin **26** into mouth **60'**.

Assembly **56** is now again advanced, for traveler threading purposes and as is shown in FIGS. **11** and **12**, toward machine **10**. Such advancement is produced by spring **134** (FIGS. **1A**, **2** and **3**) of linkage **106**, which rotates splined shaft **102** in a clockwise direction as further rotation of cam shaft **126** brings another low-dwell segment of cam **130** into engagement with follower **128**, and is halted by abutment of arcuate flange **94** of depressor **68**, which is now disposed forwardly of suction head **60** and stop element **188**, with the cylindrical outer surface of spinning ring **22**. The yarn Y extending from bobbin **26** and beneath depressor flange **94** is caused by the depressor flange to pass closely over and partially about the uppermost flange of spinning ring **22** which supports the traveler **20** to be threaded with such yarn.

For consistent success of the traveler threading operation, it is highly desirable that a precise vertical spacing exist between the traveler flange of spinning ring **22** and the arcuate depressor flange **94** therebeneath engaging the cylindrical outer surface of the spinning ring. With the present assembly, the desired precise spacing is achieved by the cam element **92** (FIGS. **12** and **14**) provided upon the undersurface of the leading end of depressor **68**. As depressor **68** is advanced with assembly **56** from its position of FIG. **10** and to its position of FIGS. **11** and **12**, cam element **92** engages and slides along the upper surface of spinning ring holder **190**, camming the forward end portion of depressor **68** upwardly about the axis of pin **74** and against the torsional biasing force of spring **86** (FIG. **13**) if and as required to insure that the vertical spacing between the traveler flange of ring **22** and the depressor flange **94** will be within desired limits. The stop-bolt **98** (FIGS. **12** and **14**) associated with depressor **68** is initially adjusted to assure occurrence of the aforesaid engagement between cam element **92** and the ring holder **190** at each delivery of spinning machine **10** which might require servicing by apparatus **36**.

After assembly **56** has assumed its position of FIGS. **11** and **12**, another blast of air then emitted from nozzle **70** thereof (FIG. **12**) propels traveler **20**, in a clockwise direction and from its pre-positioned location shown in FIGS. **10** and **11**, about the traveler flange of ring **22** and into threaded relationship with the length of yarn Y held as aforesaid by depressor **68** in engagement with such flange. Assembly **56** is then returned horizontally to its normal retracted position (cf. FIG. **7**) by linkage **106** (FIGS. **1A–3**), which rotates splined shaft **102** in a counterclockwise direction in response to further rotation of cam shaft **116** again bringing radial segment **130'** of cam **130** into engagement with follower **128**. Actuation of cable capstan **176** (FIG. **4**) then drives cable **108** in a direction moving its lug **168** upwardly into engagement with the undersurface of boss **154** (FIG. **5**) of bracket **104**. Following engagement by lug **168**, bracket **104** and assembly **56** are moved upwardly by and with it along splined shaft **102** and back to their elevated position shown in FIGS. **1–2**, **4** and **5** (solid lines), at which point cable capstan **176** is deactivated by engagement of cable lug **169** (FIG. **4**) with limit switch **170**. As bracket **104** and assembly **56** return to their elevated position, cam plate **114** (FIGS. **5** and **6**) engages and automatically retracts support member **112**, while spring-biased latch **110** (FIGS. **1A** and **6**) is first pivoted by bracket boss **154** out of its path of travel and then pivots under the impetus of spring **178** into underlying engagement with such boss.

While assembly **56** is maintained by latch **110** in its elevated position, the now traveler-threaded length of yarn extending from suction head **60** is taken therefrom and joined to the yarn issuing from the drafting rolls **14** (FIG. **1**) at the delivery of machine **10** undergoing servicing. This is accomplished by yarn end joining or piecing mechanism **58** (FIG. **1**) of apparatus **36**, which is movable toward and away from drafting rolls **14** along a path of travel closely adjacent the elevated assembly **56**. During its return movement away from drafting rolls **14** and passage by assembly **56**, mechanism **58** engages flange **88** (FIGS. **12–14**) of yarn depressor **68**. Such engagement returns depressor **68** from its operative lowered position to its inoperative elevated position shown in FIG. **14**, where it is held by pin **96**. All components of assembly **56** are then again in a condition of readiness for the commencement, when required, of another piecing operation.

Assembly **56** affords many benefits and advantages. While in its elevated position, it in no way impedes movement of carriage **38** longitudinally of spinning machine **10** and, if desired, past one or both ends thereof. The assembly is of a compact and lightweight construction, and is moved to and from its various positions with speed and precision by a relatively small number of highly reliable, durable, and inexpensive components. By utilizing movement of one component to produce or initiate desired movement of another, the use of expensive and frequently unreliable timing devices and the like is minimized.

Since the movements of the various components toward their operative positions are produced by biasing means, self-alignment is possible and damage to the components or to the spinning machine does not occur if for any reason such movements should be blocked or impeded. Similarly, if assembly **56** and bracket **104** should for any reason be prevented from moving upwardly along shaft **102** to their elevated inoperative position, the cable system of FIG. **4** would fail-safe due to slippage of cable **108** upon capstans **174,176**.

While a preferred embodiment of the invention has been specifically shown and described, this was for purposes of illustration only, and not for purposes of limitation. Various alternative embodiments and modifications of the invention will be apparent to those skilled in the art. Additionally, principles of the invention are applicable to piecing apparatuses which perform their piecing operations in a manner differing from that described previously herein. The scope of the invention should therefore be construed only in accordance with the following claims.

That which is claimed is:

1. In an automatic yarn piecing apparatus servicing a textile spinning frame or like machine having a vertically movable ring rail, said apparatus including a carriage movable longitudinally of said machine adjacent said ring rail, and a servicing assembly adapted during each piecing operation to be supported by said ring rail for movement therewith, the improvement comprising:

assembly mounting means upon said carriage mounting said assembly for vertical movement thereof upwardly to and downwardly from an elevated position above the maximum elevation of said ring rail;

a servicing assembly support member connected to said assembly for vertical movement therewith and for lateral movement relative thereto between an extended position wherein said support member projects from said carriage into overlying relationship with said ring rail and a retracted position wherein said support member is laterally offset from overlying relationship with said ring rail, said support member when in said extended position thereof being adapted to engage said ring rail and to thereby support said servicing assembly for said movement with said ring rail; and

support member lateral moving means for laterally moving said support member from one to another of its said positions in response to vertical movement of said assembly adjacent said elevated position thereof.

2. Apparatus as in claim **1**, wherein said support member lateral moving means includes biasing means for biasing said support member toward said extended position thereof, and cam means mounted by said carriage adjacent said elevated position of said assembly, said support member engaging and being retracted by said cam means upon upward movement of said assembly to said elevated position thereof, and said support member disengaging said cam means and being extended by said biasing means upon downward movement of said assembly from said elevated position.

3. Apparatus as in claim **1**, wherein said support member when in its extended position is adapted to engage said ring rail and support said assembly for vertical movement in unison with said ring rail at a desired distance above said ring rail, and further including adjustable means operatively associated with said support member for permitting adjustment of said distance between said assembly and said ring rail.

4. Apparatus as in claim **1**, including releasable latch means carried by said carriage for releasably latching said assembly in its said elevated position upon upward movement of said assembly thereto.

5. Apparatus as in claim **1**, wherein said assembly mounting means includes an upright shaft mounted upon said carriage for rotation about its axis, and bracket means connecting said assembly to said shaft for vertical movement longitudinally of said shaft and for lateral movement toward and away from said spinning machine in response to rotation of said shaft.

6. Apparatus as in claim **5**, wherein said bracket means includes first and second bracket sections connected to said shaft and movable longitudinally thereof as a unit, said second bracket section being pivotable about the axis of said shaft relative to said first bracket section in response to rotation of said shaft.

7. Apparatus as in claim **6**, wherein said second bracket section is pivotally connected to said assembly, and said bracket means further includes a third bracket section extending generally parallel to said second bracket section and pivotally connected adjacent its opposite ends to said first bracket section and to said assembly.

8. Apparatus as in claim **5**, wherein said servicing assembly includes a plurality of servicing mechanisms, means mounting one of said mechanisms for movement relative to another of said mechanisms, and cooperating means upon said assembly and upon said bracket

for initiating said movement of said one mechanism in response to movement of said assembly away from said spinning machine.

9. In an automatic yarn piecing apparatus servicing a textile spinning frame or like machine having a ring rail supporting a spinning ring mounting a traveler thereon, said apparatus including a servicing assembly operable adjacent said ring rail and having a first servicing mechanism adapted to extend a length of yarn over said spinning ring and a second servicing mechanism adapted to engage and position said yarn for traveler-threading purposes, the improvement comprising:

assembly mounting means mounting said assembly for movement toward and away from said spinning ring;

mechanism mounting means upon said assembly mounting said second mechanism for movement relative to said first mechanism from an inoperative position to an operative position;

and cooperating means associated with both of said mounting means for cooperatively effecting said movement of said second mechanism relative to said first mechanism in response to movement of said assembly away from said spinning ring.

10. Apparatus as in claim 9, wherein said mechanism mounting means includes a pivot pin mounted upon said assembly for rotary movement about and linear movement longitudinally of its axis, said second mechanism being affixed to said pivot pin and pivotable therewith relative to said first mechanism upon predetermined linear movement of said pin longitudinally of its axis.

11. Apparatus as in claim 10, wherein said pivot pin extends substantially horizontally, and said second mechanism pivots downwardly about the axis of said pin in moving from its inoperative position and to its operative position, and further including stop means carried by said assembly and underlying said second mechanism when in its inoperative position to restrain said movement thereof to its operative position, said second mechanism being displaced from overlying engagement with said stop means by said predetermined linear movement of said pin.

12. In an automatic yarn piecing apparatus servicing a textile spinning frame or like machine having a vertically movable ring rail, said apparatus including a carriage movable longitudinally of said machine adjacent said ring rail, and a servicing assembly adapted during each piecing operation to be supported by said ring rail for movement therewith, the improvement comprising:

assembly mounting means upon said carriage mounting said assembly for vertical movement upwardly to and downwardly from an elevated position above the maximum elevation of said ring rail;

cable means upon said carriage for moving said assembly upwardly to its said elevated position and for permitting gravity descent of said assembly downwardly therefrom;

and releasable latch means upon said carriage for releasably securing said assembly in its said elevated position upon upward movement of said assembly thereto by said cable means.

13. Apparatus as in claim 12, wherein said assembly mounting means includes an upright shaft mounted upon said carriage for rotation about its axis, and bracket means connecting said assembly to said shaft for vertical movement longitudinally of said shaft and for lateral movement of said assembly toward and away from said spinning machine in response to rotation of said shaft, said latch means including a latch element movable into and out of the path of vertical travel of said bracket means and having a cam surface thereon causing movement of said latch element out of the path of vertical travel of said bracket means upon engagement thereby, and resilient means biasing said latch means into the path of vertical travel of said bracket means.

14. Apparatus as in claim 13, wherein said cable means includes a cable passing freely and substantially vertically through said bracket means and drivable in opposite directions, and lug means upon said cable engageable with said bracket means when said cable is driven upwardly through said bracket means, said lug means being movable relative to said bracket means when said cable is driven downwardly.

15. Apparatus as in claim 14, including a pair of oppositely rotatable capstans, said cable being wrapped a plurality of times about said capstans and driven thereby upon actuation thereof.

16. In an automatic yarn piecing apparatus servicing a textile spinning frame or like machine having a vertically movable ring rail, said apparatus including a carriage movable longitudinally of said machine forwardly of said ring rail, and a servicing assembly adapted to operate adjacent said ring rail, the improvement comprising:

an upright shaft mounted upon said carriage for rotation about its axis;

bracket means connecting said servicing assembly to said shaft for vertical movement of said bracket means and said assembly longitudinally of said shaft in unison with said ring rail and for lateral movement of said assembly toward and away from said ring rail in response to rotation of said shaft about its axis;

and resilient means operatively connected to said shaft for rotating the same in a direction effective to cause movement of said assembly toward said ring rail.

17. Apparatus as in claim 16, wherein said bracket means includes a plurality of interconnected bracket sections movable as a unit longitudinally of said shaft, one of said bracket sections being affixed to said shaft for pivotal movement in response to rotation of said shaft relative to the other of said bracket sections.

18. In an automatic yarn piecing apparatus servicing a textile spinning frame or like machine including a ring rail supporting a spinning ring having a traveler flange thereon, said apparatus including a servicing assembly adapted during each piecing operation to be moved generally horizontally toward said ring rail of said machine, the improvement comprising:

a yarn depressor mechanism carried by said assembly for movement relative thereto in a generally vertical direction and for generally horizontal movement with said assembly into abutment with the main body portion of said spinning ring;

and cam means carried by said depressor mechanism and engageable with said ring rail during said generally horizontal movement of said assembly

for thereby moving said depressor generally vertically relative to said assembly to position said depressor a desired vertical distance from said traveler flange of said spinning ring abutted by said depressor.

19. Apparatus as in claim **18**, wherein said ring rail includes an annular ring holder encircling said spinning ring, and said cam means is engageable with said ring holder.

20. In an automatic yarn piecing apparatus servicing a textile spinning frame or like machine including a ring rail supporting a spinning ring thereon, said apparatus including a servicing assembly adapted during each piecing operation to be moved generally horizontally toward said ring rail of said spinning machine for positioning a servicing mechanism of said assembly adjacent said spinning ring, the improvement comprising:

assembly mounting means including a bracket mounted for generally horizontal movement toward said ring rail during each piecing operation; means interconnecting said bracket and said assembly for generally horizontal movement of said assembly with said bracket and for adjustive lateral movement of said assembly relative to said bracket;

and cam means carried by said servicing assembly and engageable with said spinning ring during said generally horizontal movement of said assembly for thereby adjustively moving said assembly laterally as required to align said servicing mechanism with said spinning ring.

21. Apparatus as in claim **20**, wherein said cam means comprises an arcuate member having a curvature complementary to the curvature of the outer surface of the main body portion of said spinning ring.

22. Apparatus as in claim **20**, wherein said bracket includes a plurality of bracket sections, and lost-motion connecting means so interconnecting said assembly and one of said bracket sections as to permit said lateral movement of said assembly under the impetus of said engagement of said cam means with said spinning ring.

* * * * *