(No Model.)

J. DICK

FODDER CUTTER.

No. 562,513. Patented June 23, 1896.

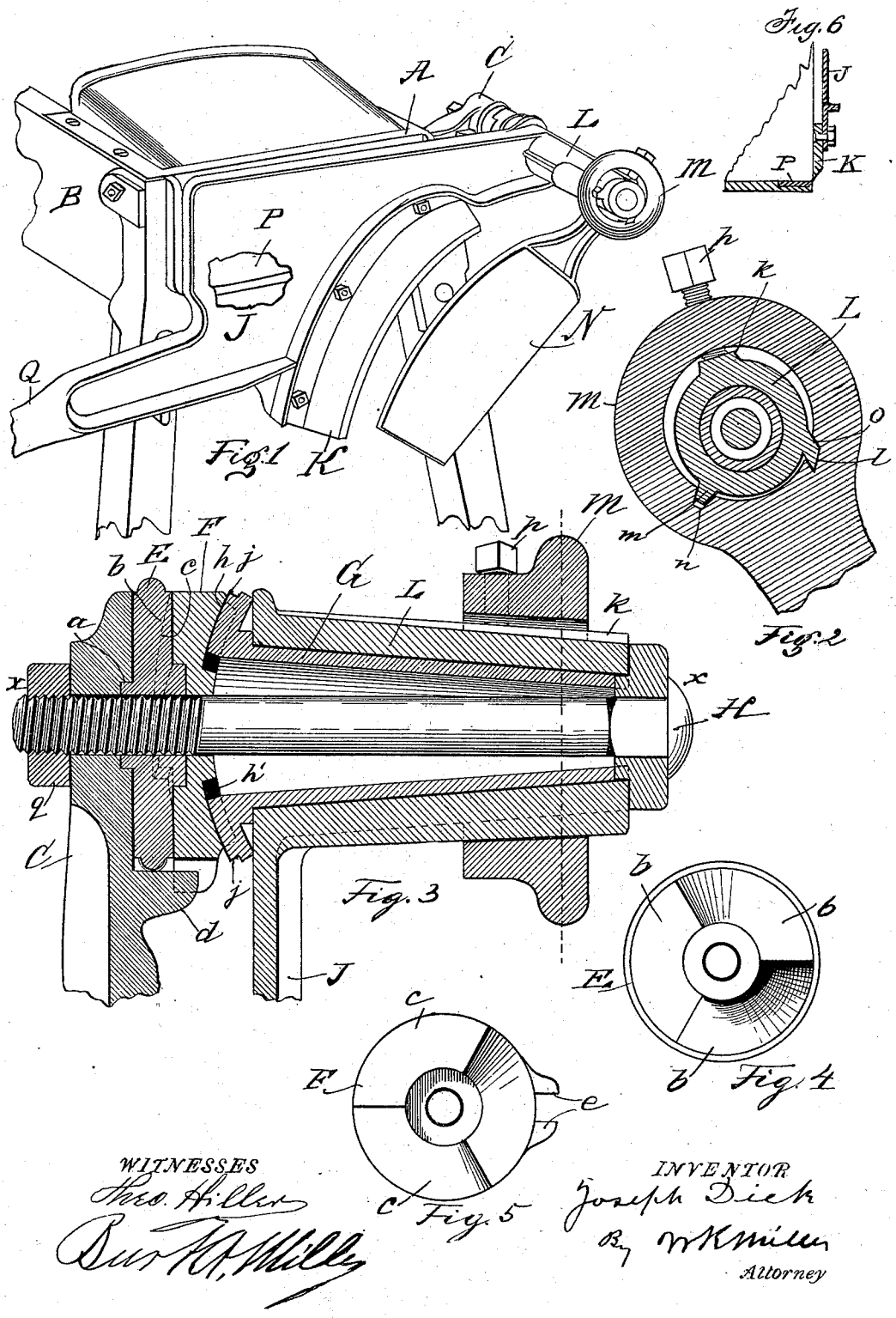

WITNESSES

Theo. Hiller

Burt H. Miller

INVENTOR

Joseph Dick

By W K Miller

Attorney

ANDREW B. GRAHAM, PHOTO-LITHO. WASHINGTON, D.C.

UNITED STATES PATENT OFFICE.

JOSEPH DICK, OF CANTON, OHIO.

FODDER-CUTTER.

SPECIFICATION forming part of Letters Patent No. 562,513, dated June 23, 1896.

Application filed August 7, 1895. Serial No. 558,478. (No model.)

To all whom it may concern:

Be it known that I, JOSEPH DICK, a citizen of the United States, and a resident of Canton, county of Stark, State of Ohio, have invented a new and useful Improvement in Fodder-Cutters, of which the following is a full, clear, and exact description, reference being had to the accompanying drawings, making part of this specification.

My invention relates to an improvement in fodder-cutters; and it consists in providing means whereby the movable cutting-blade may be adjusted bodily to or from the stationary cutter or by which either end of the movable cutter may be adjusted to or from the stationary cutter.

My invention further relates to and consists in providing means whereby the feed-gage plate may be secured in desired relation to both the stationary and the movable cutter.

With these objects in view my invention relates to certain features of construction and combination of parts, as will be hereinafter described and claimed.

Figure 1 of the drawings is a perspective of the end portion of a fodder-cutter, showing my invention. Fig. 2 is a cross-section through the hub of the gage-plate and its support. Fig. 3 is a longitudinal section through Fig. 2 from *x* to *x*. Figs. 4 and 5 are disks by which the movable cutter and gage are adjusted to the fixed cutter. Fig. 6 is a detail longitudinal section showing the stationary and vibrating knives.

The invention is especially adapted for a hand field and hand cutting machine of the kind shown in Fig. 1 of the drawings.

A denotes a cast-metal end piece for the feed-box B, having an arm, as C, projected therefrom, on which is supported the axis, about which the cutting blade or knife K is rotated. In the rear face of the arm C is provided a recess *a*, in which is placed a rotatable disk E, having on its rear face inclined surfaces *b*, against which is placed a similar non-rotatable disk F, having corresponding engaging graded or inclined surfaces *c*, and on the rear side of said disk is provided a circular or concaved depression *h*, having in its face oppositely and horizontally disposed grooves or recesses *h'*. There is also provided on the rear face of the arm C a lug, as *d*, and on the disk F lugs *e*, that engage the lug *d*, by which the disk F is held against rotation.

The grooves *h'* in the rear face of the disk F are provided to receive the ribs *j* on the front end of the conical sleeve G, which is of the form, or substantially so, shown in Fig. 3. The front or large end of said sleeve is adapted to have its axis of motion adjustable to throw the point of the knife farther in or out relatively to the stationary knife, the ribs *j* resting in the grooves *h'* for the purpose hereinafter stated.

On the frame or plate J, that carries the movable knife K, and integral therewith, is provided a sleeve portion L, having external ribs *k*, *l*, and *m*, on which is secured the head portion M of the gage-plate N, said head having grooves *n* and *o*, to receive the ribs *l* and *m*, and in the head M is provided a set-screw *p*, by which the head is secured on the sleeve.

In operation, the parts being assembled as shown in Fig. 3, to adjust the movable cutter K with respect to the stationary knife P (shown through the broken-away portion in the frame J) the nut *q* on the tightening-bolt is turned back a distance, and the disk E rotated in its bearing or socket *a* in the arm C. The grades *b*, resting against the grades *c* on the face of the disk F, will move the sleeves G and L and the cutter K parallel from or to the stationary or fixed cutter P, in which position or desired adjustment the parts may be secured by the bolt H, and to adjust the end portions of the knife K to the fixed knife P, the sleeve G may be rocked or moved laterally on its bearing on the disk F. In use the natural wear of the parts is such as to allow the end of the knife K next the handle Q to leave the knife P and pass down without cutting all of the straw or other fodder, and to bring the knife K back into operative position the thimble may be moved on the disk F to bring the cutting edges of the two knives into desired alinement, or what is preferable, to set the handle end of the knife K a little closer to or tighter on the knife P than the other or heel end, as in use the tendency of the handle end of the knife K is to spring back from the knife P.

In practice, as heretofore constructed, it has been found difficult to hold the gage-plate securely on the sleeve L, and to remedy this difficulty I have provided on the sleeve ribs, as *l* and *m*, the first-mentioned having parallel sides, and the latter converging sides, as shown, and in the head M corresponding grooves *n* and *o*, by which the head M is guided along the sleeve and the gage-plate oscilated without great strain on the set-screw *p*, by which the gage-plate is held in desirable adjustment relative to the fixed knife.

Having thus fully described the nature and the object of my invention, what I claim is—

1. In a fodder-cutter of the character described, the combination with the fodder-box, the stationary knife, the arm secured to said box, and the screw-bolt secured thereto provided with a tightening-nut, of the rotatable disk carried by said bolt having cam-faces on one side, the non-rotatable disk having corresponding cam-faces engaging therewith, the sleeve through which said bolt loosely passes, the rotatable sleeve mounted thereon, and the arm and knife secured thereto, substantially as described.

2. The combination in a fodder-cutter of a fixed, and a vibratory cutter, of the disk F, having on its rear face, a concaved socket having therein oppositely-disposed grooves, a cutter-supporting sleeve having a conical bore, and ribs adapted to said grooves, and a through-bolt, whereby the vibratable cutter may be adjusted transversely to a line drawn longitudinally through the fodder-box, substantially as described and for the purpose set forth.

3. The combination in the described fodder-cutter, having a fixed and a vibratory cutter, and a gage-plate that moves with the last-mentioned cutter of the ribs *l* and *m*, on the supporting-sleeve L, the rib, *l*, having parallel sides and the rib, *m*, having converging sides head M, and grooves *n* and *o*, to receive the ribs *l* and *m*, and a set-screw *p*, whereby said head may be secured in desired adjustment on the sleeve L without great strain on the set-screw, substantially as described and for the purpose set forth.

4. In a fodder-cutter of the character described, the combination with the fodder-box, the stationary knife, the arm secured to said box, the screw-bolt connected therewith and its nut, of the rotatable disk having cam-faces on one side, the non-rotatable disk having cam-faces on one side engaging therewith and formed with a concave recess on the opposite side provided with opposite grooves, the sleeve through which said bolt loosely passes having its inner end convexed and provided with ribs engaging with said grooves, and the rotatable sleeve provided with an arm and knife, substantially as described.

5. In a fodder-cutter of the character described, the combination with the fodder-box, the stationary knife, the arm secured to said box and provided with a stud or lug and a circular recess, of the screw-bolt secured to said arm, the tightening-nut, the rotatable disk having a hub on one side engaging with said recess, and cam-faces on its opposite side, the non-rotatable disk having a lug engaging with the lug of said arm and provided on one side with cam-faces engaging with the cam-faces of the rotatable disk and formed on its opposite face with a concave depression provided with opposite grooves, the sleeve through which said bolt loosely passes having its inner end convexed and formed with ribs engaging with said grooves, the rotatable sleeve mounted on said sleeve and provided with an arm and the knife secured thereto, substantially as described.

In testimony whereof I have hereunto set my hand this 27th day of July, A. D. 1895.

JOSEPH DICK.

Witnesses:
W. K. MILLER,
BURT A. MILLER.