April 30, 1929. A. G. HACKNEY 1,710,821

WHEEL CHAIR

Filed Nov. 30, 1926 2 Sheets-Sheet 1

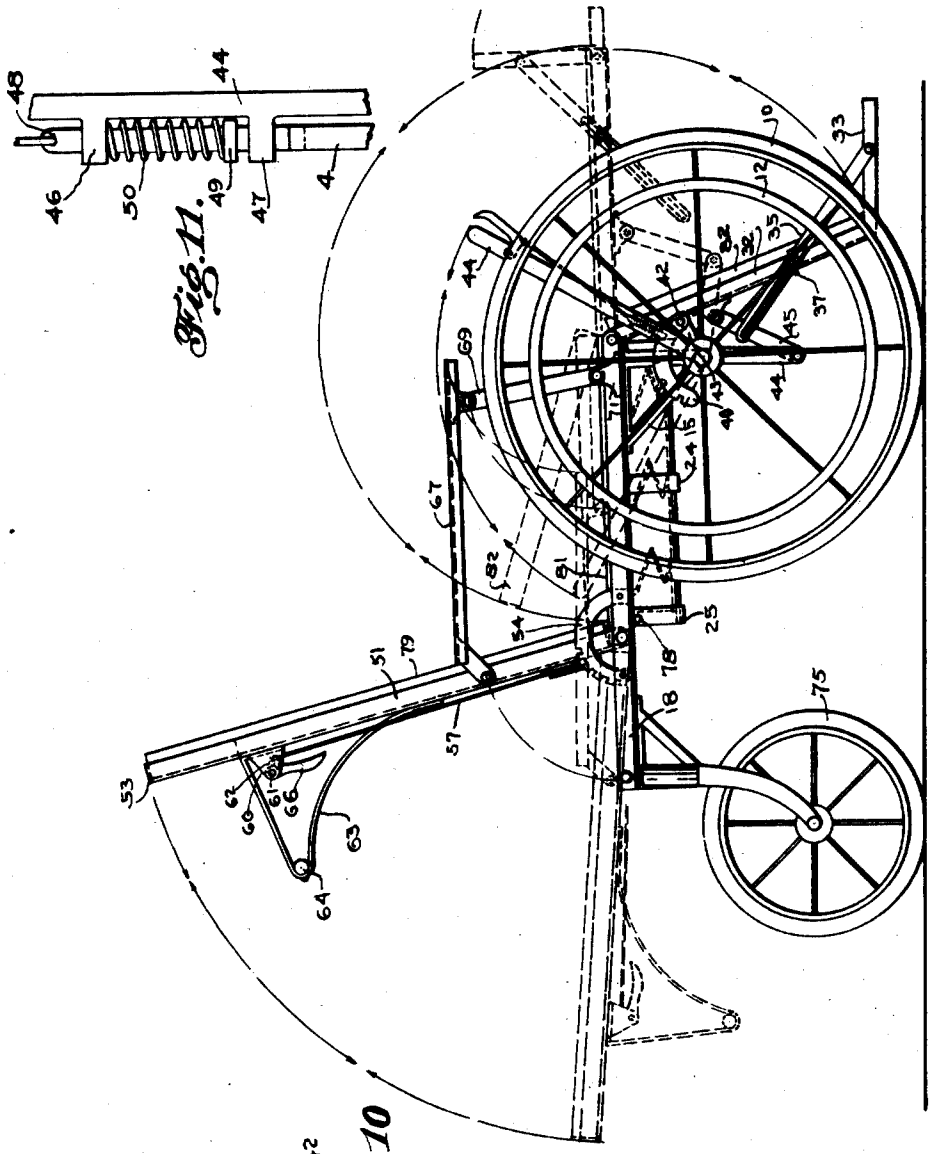

Fig. 1.

Fig. 11.

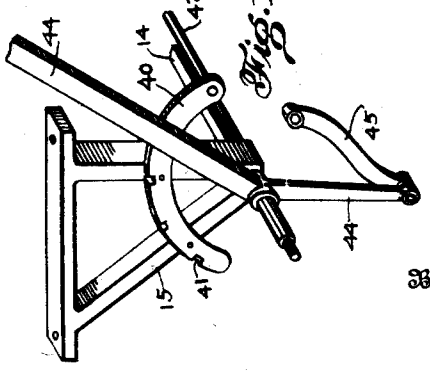

Fig. 10

Arthur G. Hackney
Inventor

By Paul B. Eaton

Attorney

April 30, 1929. A. G. HACKNEY 1,710,821

WHEEL CHAIR

Filed Nov. 30, 1926 2 Sheets-Sheet 2

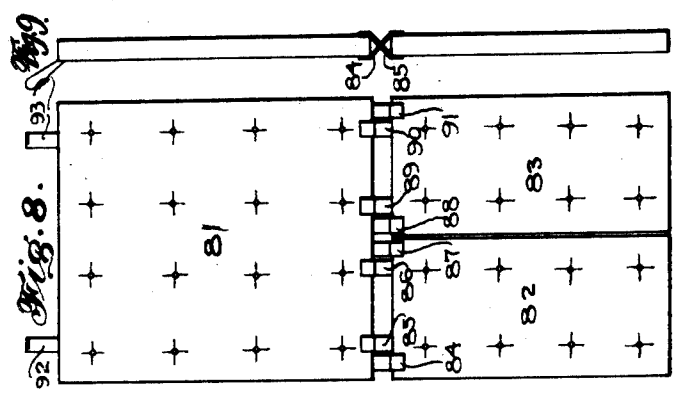

Fig. 8.

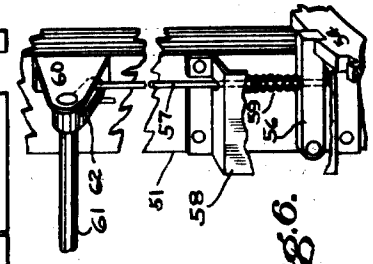

Fig. 6.

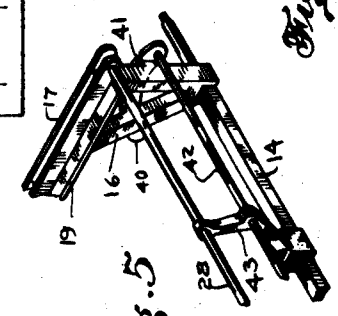

Fig. 5.

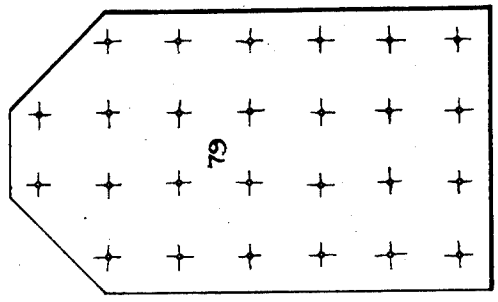

Fig. 7.

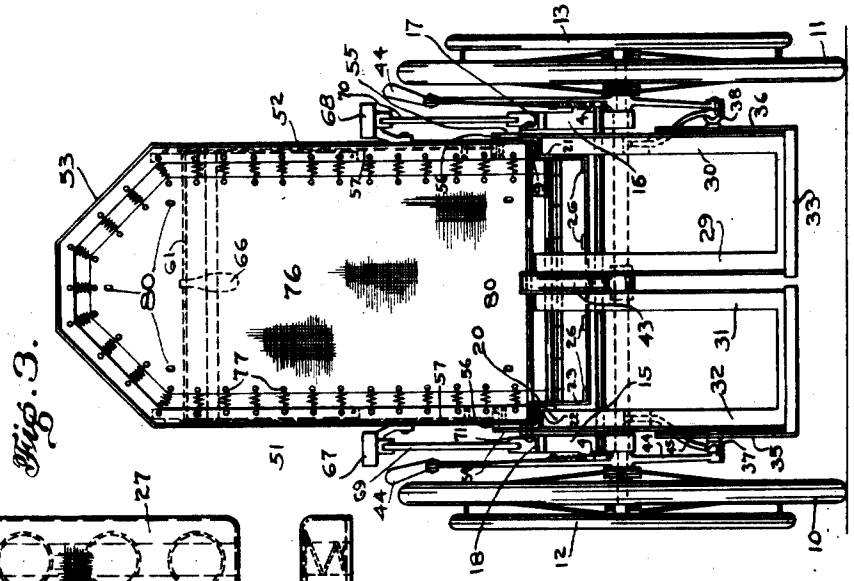

Fig. 2.

Fig. 3.

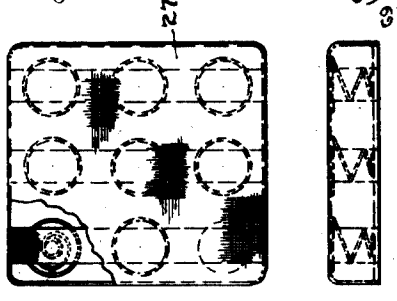

Fig. 4.

Inventor

Arthur G. Hackney

By Pauel B Eaton

Attorney

Patented Apr. 30, 1929. 1,710,821

UNITED STATES PATENT OFFICE.

ARTHUR G. HACKNEY, OF WINSTON-SALEM, NORTH CAROLINA, ASSIGNOR OF ONE-HALF TO J. M. HUNT, OF GREENSBORO, NORTH CAROLINA.

WHEEL CHAIR.

Application filed November 30, 1926. Serial No. 151,721.

My invention relates to wheel chairs, and more especially to chairs in which the back and leg portions may be adjusted in novel ways.

An object of my invention is to provide a wheel chair with as near as practical all steel construction, thus giving greater rigidity and longer wear.

Another object of my invention is to provide a wheel chair in which the back portion may be adjusted in such a manner that it will remain in the adjusted position until the position is changed by the said adjusting means being manipulated.

Another object of my invention is to provide in a wheel chair for the use of invalids in which the back portion may be lowered to a position level with the seat portion, and also the leg portions may be also adjusted to a position level with the seat portion, thus forming a cot.

Some of the objects of invention having been stated, other objects will appear as the description, taken in connection with the accompanying drawings, proceeds.

In the drawings I have set forth a preferred embodiment of my invention, in which—

Figure 1 is a side elevation of my wheel chair, showing in dotted lines the several positions to which the parts may be adjusted;

Figure 2 is a front elevation of the chair with the rear wheels not shown;

Figure 3 is a plan view of the spring cushion which fits in the seat portion;

Figure 4 is an elevation of Figure 3;

Figure 5 is a perspective of a portion of the axle and associated parts;

Figure 6 is a perspective view of a portion of the adjusting means for the back portion;

Figure 7 is an elevation of the cushion for the back portion;

Figure 8 is an elevation for the cushions for the seat and leg portions;

Figure 9 is an edge view of the seat and leg cushions;

Figure 10 is a perspective of one of the leg rest operating means;

Figure 11 shows the spring pressed pawl for the adjusting means for the leg portion.

A brief description of the drawings having been given, a detailed description of the drawings will now follow, in which like reference characters indicate corresponding parts throughout the drawings.

The numeral 10 indicates one of the main wheels, while the numeral 11 indicates the other of the main wheels. Secured to the spokes of these wheels 10 and 11, and having the same center, are the hand wheels 12 and 13. These wheels 10 and 11 are rotatably mounted on the axle 14, and on said axle are fixedly secured the upwardly projecting brackets 15 and 16, and secured to the upper faces of these brackets are the angle iron members 17 and 18, and secured parallel to the angle iron members 17 and 18 are the similar angle iron members 19 and 20, and beneath the members 19 and 20 are secured the angle iron members 21 and 22, all of said members running parallel to each other. Secured to the angle iron members 19 and 20 are the downwardly projecting support members, which have cross-strips, the downwardly projecting support members being indicated by the numerals 23, 24 and 25, and the cross-strips which run parallel to the members 21 and 22, but on a lower plane, are indicated by the numeral 26. In this structure just described the seat cushion 27 is supported.

Pivotally secured to the forward ends of the members 17, 19, and 18 and 20, by means of the bolt 28, are the angle iron members 29, 30, 31, and 32. The members 29 and 30 have the foot portion 33 pivotally secured to their free ends, and the members 31 and 32 have the foot portion 34 secured in a pivotal manner to their free ends. The foot portions are adjusted with relation to their leg portions by means of slotted braces 35 and 36, which are adjusted by means of the thumb nuts 37 and 38.

Fixedly secured on the brackets 15 and 16, are the quadrants 40 and 41, and running from the forward end of one of these quadrants to the forward end of the other quadrant, is the bolt 42, which serves as a support for the leg portions and limits their downward movement. A brace 43 is secured to the axle and is penetrated by the bolts 28 and 42, this brace being placed in the position shown to give strength to the structure.

The adjusting means for the two leg portions are separate from each other but a description of one will suffice for the other, hence the parts in the two adjusting means will be the same. These adjusting means comprise the lever 44 pivotally secured around the axle 14 intermediate the ends of

the said lever, and pivotally secured to the lower end of the said lever is the member 45, whose other end is pivotally secured to the leg section. The inner surface of the lever 44 has the two projections 46 and 47, which projections are perforated, and in these perforations the dog 48 is adapted to slide. Near the lower projection 47 a cuff 49 is secured around the dog 48, and between this cuff and the projection 46 the compression spring 50 is mounted around the dog 48, which spring serves to cause the dog to normally engage the square notches in the quadrant 40.

Pivotally secured to the inner surface of the members 19 and 20 are the angle iron side members of the back portion, these portions being designated by the numerals 51 and 52, and secured to the upper ends of these members 51 and 52 is the irregular shaped member 53, which forms the top portion of the back member. Fixedly secured between the members 18 and 20 is the quadrant 54, and likewise secured between the members 17 and 19 is the quadrant 55. Pivotally secured to each of the members 51 and 52 is the dog member 56, which is adapted to have its free end rest normally in one of the square notches in the quadrant. Loosely secured to the dog intermediate its ends is the rod 57, which rod penetrates a shield 58, and between the lower face of this shield and the dog 56 is mounted the compression spring 59, which spring is loosely mounted around the rod 57, and said spring is adapted to press the dog into engagement with the notches in the quadrant.

Secured to the rear surfaces of the members 51 and 52 are the brackets 60, and between these brackets a rod 61, having crank arms 62 on its ends, is secured. These crank arms have secured thereto the upper ends of the rods 57, and near the central portion of the said rod 61 is the handle member 66.

Fixedly secured to the rear surfaces of the members 51 and 52 and projecting rearwardly therefrom for some appreciable distance, are the members 63 and secured in the apex of these members and running from one to the other, is the handle member 64, which serves as a push handle for rolling the chair from place to place.

Pivotally secured to the members 51 and 52 are the handle members or arms 67 and 68, and pivotally secured to the lower sides of the forward ends thereof are the members 69 and 70, whose lower ends are pivotally secured to forked brackets 71 and 72, which brackets are secured to the framework members 17 and 18.

A suitable cross-piece (not shown) is secured to the rear end of the main frame, and to the rear corners of the main frame are secured the swiveled wheels 75.

The back member 76, made of canvas or other suitable material, is secured to the members 51, 52 and 53 by means of tension springs 77, and the lower end of this back member is secured to the rod 78, and secured to the back member is the pad 79, as shown in Figure 7. This pad 79 has twist fasteners on its rear surface (not shown) which are adapted to enter the eyelets 80 and after being given a one-quarter turn will hold the pad to the back portion.

A pad 81, as shown in Figure 8, is adapted to be placed on top of the seat cushion 27, and to this pad 81 there is secured the leg pads 82 and 83 by means of the flexible strips 84, 85, 86, 87, 88, 89, 90, and 91, this flexible connection allowing the leg portions to be folded on top or underneath the pad 81, they being shown in dotted lines in Figure 1 as folded on top of the pad 81. When the patient is able to arise from the chair, these leg pads may be folded underneath the pad 81. The pad 81 has flexible strips 92 and 93 secured to the rear end of the pad, which are adapted to be secured to the rod 78 for holding the pad in place in the chair.

The method of operation of my wheel chair is as follows:

When all the described parts are in their proper places and a patient is seated in the chair with the parts in the position shown in full lines in Figure 1, the chair may be pushed from place to place by means of the handle 64. The peculiar structure of the square notches in the quadrants 54 and 55 and the square dogs fitting therein prevent the back portion from being pushed forward on its pivot, and thus the device may be used as a wheel chair. When it is desired to lower the patient to a prone position, the back portion may be lowered to the position shown in dotted lines in Figure 1, and the leg portions may be raised to the position shown in dotted lines in Figure 1, and the foot portion may be adjusted to the position shown in dotted lines in Figure 1, and the device can then be used as a cot.

In the drawings and description I have set forth a preferred embodiment of my invention, and although specific terms are employed, they are used in a generic and descriptive sense only, and not for purposes of limitation, the scope of the invention being set forth in the appended claim:

In a wheeled chair, a combination of a main frame, downwardly projecting members secured to the forward portion of the main frame, an axle secured in the downwardly projecting members, wheels secured on the ends of the said axle, a leg portion pivotally secured to the forward portion of the main frame and adapted to swing downwardly in front of the axle, a ratchet secured to each of the downwardly projecting portions, levers pivotally mounted on the axle and having a pawl located thereon, the lower ends of the levers being pivotally connected to a link, the other end of the link being piv-

otally connected to the leg portions to permit the leg portions to be adjusted by the operation of said levers, a back portion pivotally connected to the rearward portion of the main frame, a pawl and ratchet mechanism associated with said back portion and said main frame, to permit angular adjustment of the back portion with relation to the main frame, a wheel for supporting the rear end of the main frame, the back portion and leg portion being adapted to be swung into the same horizontal plane as the main frame.

In testimony whereof I affix my signature.

ARTHUR G. HACKNEY.