(1)

Dec. 28, 1948. HENRI-GEORGES DOLL ET AL 2,457,214

RECORDING DEVICE

Filed July 21, 1942 4 Sheets-Sheet 1

FIG.1.

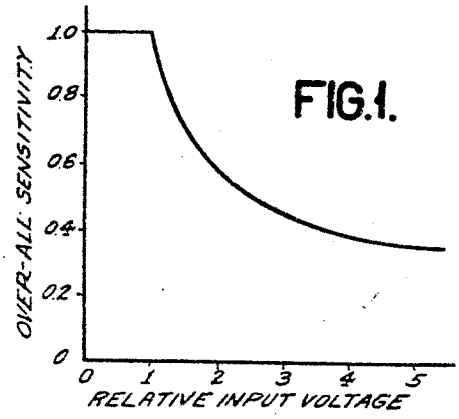

FIG.2.

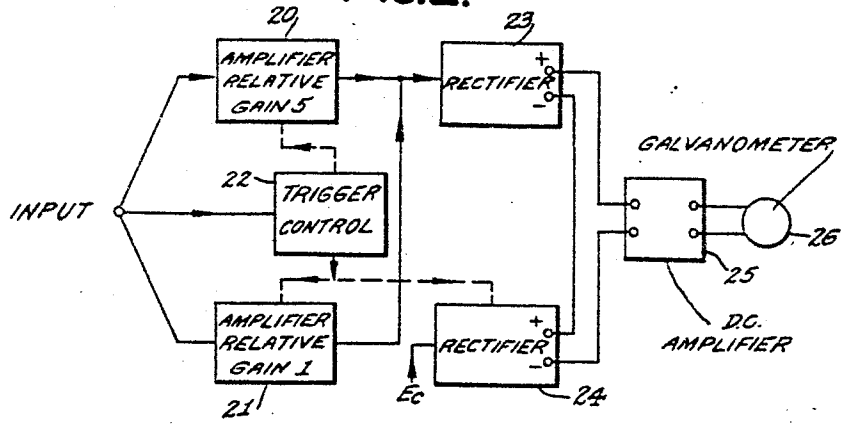

FIG.3.

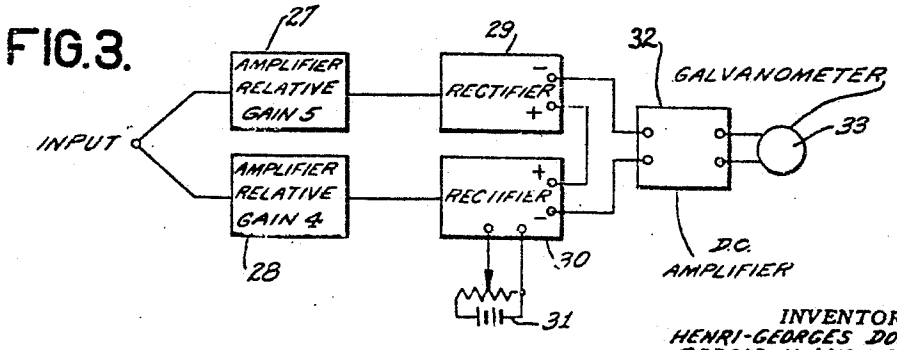

INVENTORS.
HENRI-GEORGES DOLL
GERALD K. MILLER

BY Hoguet, Neary & Campbell

ATTORNEYS

Dec. 28, 1948. HENRI-GEORGES DOLL ET AL 2,457,214

RECORDING DEVICE

Filed July 21, 1942 4 Sheets-Sheet 2

FIG.4.

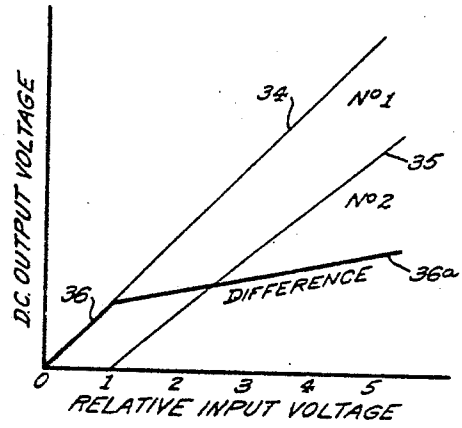

FIG.5.

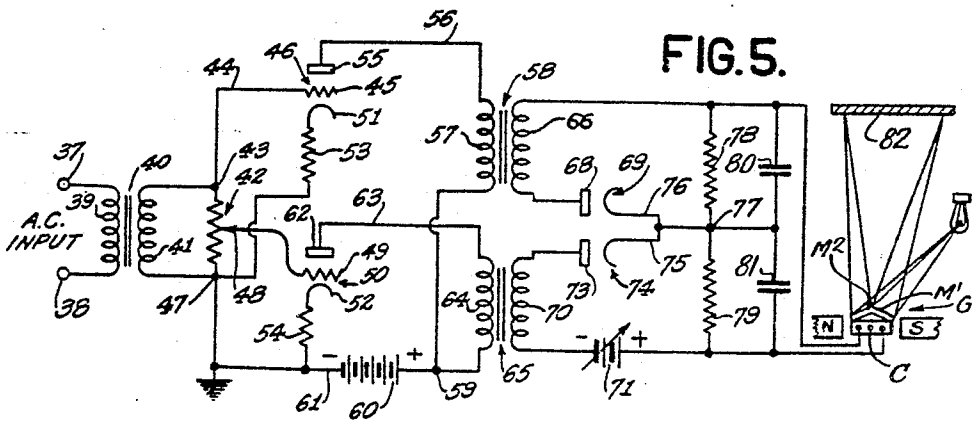

FIG.9.

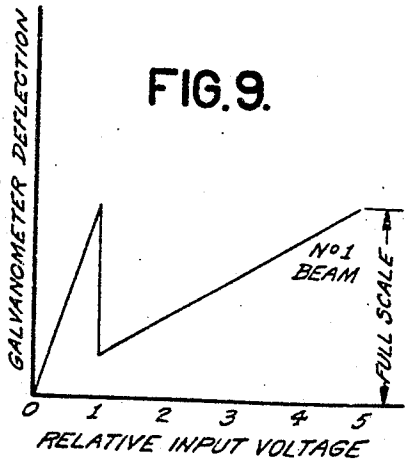

FIG.6.

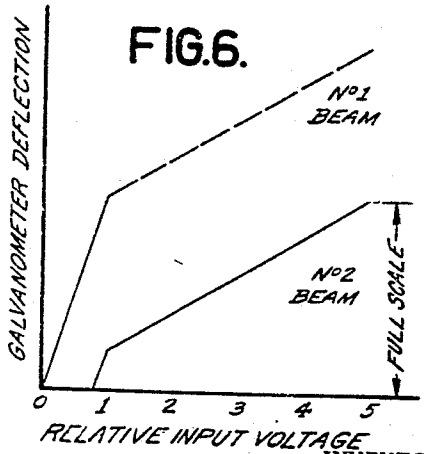

INVENTORS.
HENRI-GEORGES DOLL
GERALD K. MILLER

BY Hoguet, Neary & Campbell

ATTORNEYS

RECORDING DEVICE

Filed July 21, 1942 4 Sheets-Sheet 3

FIG.8.

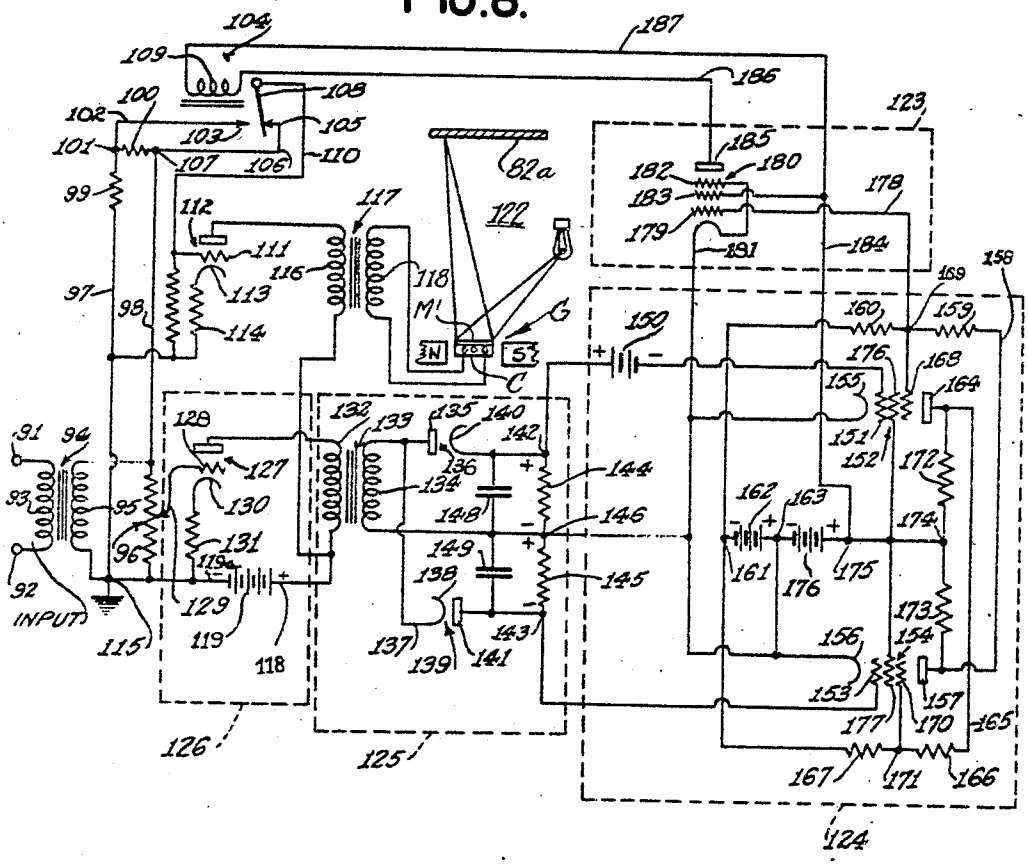

FIG.10.

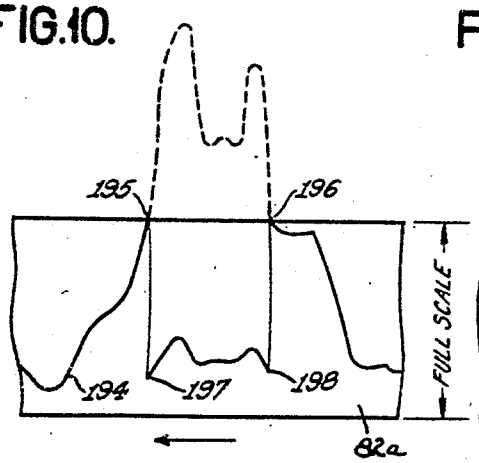

FIG.7.

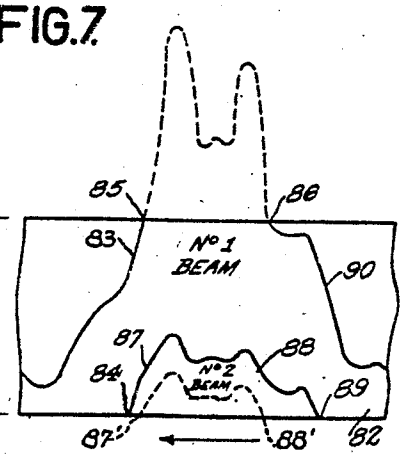

INVENTORS.
HENRI-GEORGES DOLL
GERALD K. MILLER

BY Hoguet, Neary & Campbell
ATTORNEYS

Dec. 28, 1948. HENRI-GEORGES DOLL ET AL 2,457,214

RECORDING DEVICE

Filed July 21, 1942

4 Sheets-Sheet 4

FIG.11.

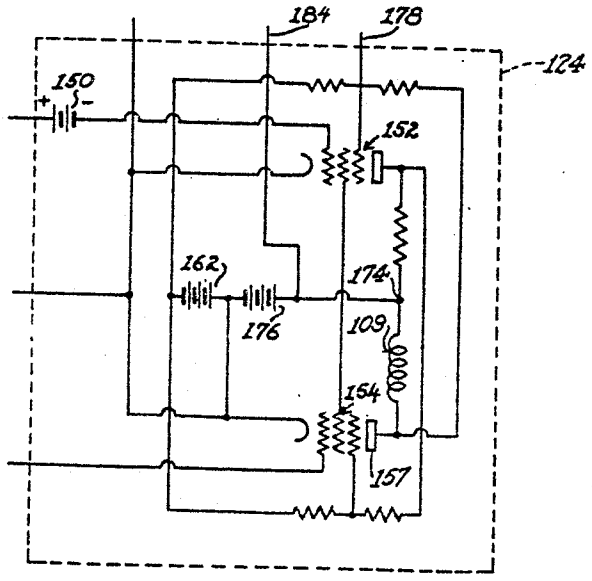

FIG.12.

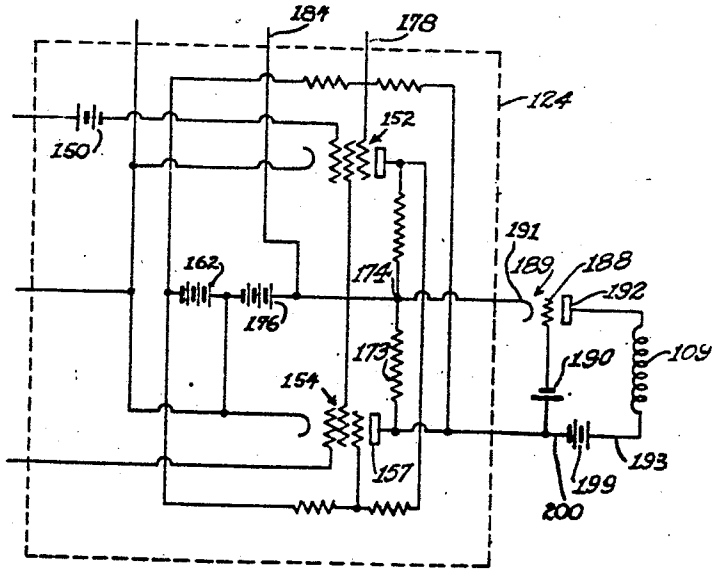

INVENTORS.
HENRI-GEORGES DOLL
GERALD K. MILLER
BY Hoguet, Newman & Campbell
ATTORNEYS

Patented Dec. 28, 1948

2,457,214

UNITED STATES PATENT OFFICE

2,457,214

RECORDING DEVICE

Henri-Georges Doll and Gerald K. Miller, Houston, Tex., assignors to Schlumberger Well Surveying Corporation, Houston, Tex., a corporation of Delaware

Application July 21, 1942, Serial No. 451,789

16 Claims. (Cl. 346—33)

1

This invention relates to recording apparatus and more particularly to apparatus for automatically recording, upon a moving record strip, changes in the magnitude of a variable as a function of another variable.

More specifically, the invention relates to new and improved recording apparatus of the above character, the sensitivity of which is adapted to be changed automatically whenever the magnitude of the variable being recorded reaches a predetermined value.

Recording systems now in use comprise both mechanical and optical apparatus. In the former, generally a recording stylus of suitable character is moved across a moving record strip in accordance with variations in the magnitude of a variable. In the latter, a beam of light is usually displaced angularly about a fixed axis in accordance with variations in the magnitude of a variable. The beam of light is so disposed with respect to a moving light sensitive strip that it moves transversely across the record strip as the magnitude of the variable changes.

In certain fields of operation in which recording apparatus of the above type is employed, the magnitude of the variable to be recorded may sometimes be relatively small and vary between narrow limits, and at other times during the same run, be relatively large or vary within large limits. This situation frequently arises in electrical logging methods of the type disclosed in prior Patent No. 1,819,923 to Conrad Schlumberger, for example, for investigating earth formations traversed by a bore hole. Experience with such methods has shown that different geological horizons frequently exhibit different ranges of values. Also, small variations in the variable when the latter has a relatively small order of magnitude, are often as important as large variations in another horizon.

In practicing methods of this character, it is impossible in many cases to estimate beforehand the range of values of the variable that may be encountered during the course of a run. If, as a precautionary measure, the sensitivity of the apparatus is adjusted so that the record strip will accommodate the greatest possible magnitude of the variable that may be expected, the record obtained of small variations in small values of the variable may be so minute as to make it difficult to interpret the curve obtained. On the other hand, if the sensitivity of the apparatus is increased to the point where an easily readable record of such small variations may be obtained, it may not be possible to accommodate on the

2

record strip the maximum values of the variable encountered during the course of the run.

It is an object of the invention, accordingly, to provide a new and improved recording apparatus which is free from the above noted deficiencies of prior art apparatuses.

Another object of the invention is to provide a new and improved recording apparatus of the above character in which the sensitivity is adapted to be changed automatically whenever a predetermined value of the variable is reached, whereby both small and large variations in the value of the variable may be recorded satisfactorily on a relatively narrow record strip.

A further object of the invention is to provide a new and improved recording apparatus which includes means for changing the sensitivity of the recording device whenever a predetermined, adjustable value is reached.

A still further object of the invention is to provide a new and improved recording apparatus of the above character which furnishes a continuous record of values, as distinguished from an intermittent record, in which different portions of the curve or curves may be recorded at different sensitivities.

Another object of the invention is to provide new and improved means for instantaneously modifying the sensitivity of an indicating device when a predetermined value of the quantity being indicated is reached.

Still another object of the invention is to provide a new and improved apparatus for gradually changing the sensitivity of an indicating device after a predetermined value of the quantity to be indicated has been attained.

It is a further object of the invention to provide an automatic sensitivity control apparatus in which mechanical means, such as for example, transformer tap changing apparatus, mechanical switches, relays or solenoids are employed for changing the sensitivity of an indicating device.

Another object of the invention is to provide a new and improved automatic sensitivity control apparatus in which electronic means is employed for changing the sensitivity of an indicating device and in which no movable mechanical apparatus is used.

In accordance with the invention, means are provided for changing the sensitivity of an indicating device when the quantity to be indicated reaches a predetermined value. For example, this may be the value corresponding to the full scale deflection on the most sensitive scale of the device used for recording the quantity. In this

embodiment of the invention, so long as the value of the quantity to be indicated is less than the value corresponding to the full scale deflection of the indicating device, the indicating instrument has one degree of sensitivity. However, as soon as the value of the quantity being indicated becomes greater than the value corresponding to full scale deflection of the indicating instrument, means are actuated to reduce the sensitivity instantaneously to a predetermined value. This value is so chosen that the maximum value of the variable being recorded may be conveniently accommodated on the record strip.

In another embodiment of the invention, the indicating device operates at one sensitivity until full scale deflection is reached. For any increment in the quantity being indicated, above the quantity corresponding to the full scale deflection of the indicating device, the increment is recorded at reduced sensitivity. To this end means are provided for producing a gradual change in the over-all sensitivity of the instrument as the value of the quantity being recorded increases beyond the value corresponding to the full scale deflection. In this embodiment of the invention, it is preferable to employ a recording device in which all values of the variable greater than the maximum value that can be accommodated by the record strip are recorded near the edge of the record strip which is closest to the reference axis of the record. Recording devices of this type are disclosed in prior Patent No. 2,258,700 to Henri-Georges Doll.

Additional objects and advantages of the invention will become apparent from the following detailed description of several preferred embodiments taken in connection with the accompanying drawings in which

Figure 1 is a curve illustrating the manner in which the over-all sensitivity of a recording device should vary in order to produce a reduced sensitivity thereof for all values of the quantity being recorded above a predetermined value;

Figure 2 illustrates schematically an electronic addition circuit having an over-all sensitivity curve of the type shown in Figure 1;

Figure 3 is a schematic diagram of an electronic subtraction circuit having an over-all sensitivity curve like that shown in Figure 1;

Figure 4 is a graph showing in greater detail the relation between the output and input voltages of the sensitivity changing circuit illustrated in Figure 3;

Figure 5 is a schematic diagram illustrating in greater detail the electronic subtraction circuit shown in Figure 3;

Figure 6 is a graph illustrating the relation between the deflection of the indicating device and the relative input voltage for the sensitivity changing circuit shown in Figure 5;

Figure 7 illustrates a representative curve such as might be obtained with a sensitivity changing circuit of the type shown in Figure 5;

Figure 8 is a schematic diagram illustrating a circuit for actuating mechanical means to change the sensitivity of a recording device instantaneously when a predetermined value of the quantity being recorded is attained;

Figure 9 is a graph illustrating the relation between the deflection of the indicating device and the relative input voltage for the circuit shown in Figure 8;

Figure 10 illustrates a representative curve such as might be recorded by the sensitivity changing apparatus shown in Figure 8, and

Figures 11 and 12 illustrate schematically further modifications of the circuit shown in Figure 8.

For the sake of convenience, the indicating device will be referred to in the following detailed description as a galvanometer having a light beam reflecting mirror attached to the moving element thereof and a moving photosensitive record strip will be referred to as means for recording the quantities indicated, it being fully understood that these examples are only typical and that any equivalent means may be substituted therefor. Any voltage or current responsive means may be substituted for the galvanometer and any recording means, such as, for example, a stylus moving across a chart, or chemical or photoelectric means may be substituted for the record strip and light beam within the skill of the art.

Also, the several embodiments of sensitivity changing apparatus will be described and illustrated as operating as a function of voltage, i. e., when the input voltage reaches a predetermined value, although current sensitive systems may be used equally well.

Apparatus for automatically producing either an instantaneous or a gradual change in the sensitivity of an indicating device may be broadly classified as electronic or mechanical. If the sensitivity control is accomplished entirely through the use of vacuum tube circuits or other electronic devices, they will be here classified as electronic for the sake of convenience in discussing and distinguishing them. If the control is accomplished by any apparatus which makes use of a relay or other mechanical switching device, such apparatus will be classified as mechanical even though vacuum tube circuits may be employed in conjunction therewith.

Electronic systems, in which the over-all sensitivity change is produced gradually, are generally preferred for most types of work and for that reason will be considered first. In a system of this character, the sensitivity of the recording apparatus is constant until the full scale value on the most sensitive scale is appproached or reached. At that time the over-all sensitivity is gradually reduced in such fashion that the total deflection of the galvanometer is equal to a value corresponding to the full scale deflection plus an additional deflection which is proportional to the voltage above the full scale value on the more sensitive scale.

For example, if an input of 100 millivolts produces a full scale deflection of 100 divisions on the more sensitive scale and if the effective sensitivity is reduced to ⅕ by the automatic sensitivity changing apparatus, for an input voltage of 200 millivolts, a deflection of 100 divisions would be produced by the first 100 millivolts and a deflection of 20 divisions would be produced by the second 100 millivolts, giving a total galvanometer deflection of 120 divisions.

Thus, with this variety of apparatus there are two types of sensitivity, which is not usually the case when dealing with conventional indicating apparatus. In conventional indicators, the addition of a given increment of input produces a corresponding increase in deflection. In the case of direct current meters, for instance, increasing the input 10% generally produces a 10% increase in the meter reading so it could be said that the incremental sensitivity and the over-all sensitivity are one and the same. In speaking of galvanometers, it is customary to give the micro-

amperes or the input for full scale deflection, so there is really just one sensitivity to be considered. In this application, the incremental sensitivity may be quite different from the over-all sensitivity so the two types of sensitivity must be clearly understood and distinction made between them. The "incremental sensitivity" is the incremental difference in deflection produced by an incremental change in the input; the "over-all sensitivity" is the ratio of the total input voltage or current to the total deflection. As will become evident as the description proceeds, the present instrument has a constant incremental sensitivity for input values less than a predetermined value and another, generally a reduced, constant incremental sensitivity for input values in excess of the predetermined value. The indicator can be thought of as one having two linear scales with the zero of one scale displaced from the other. In the present invention, then, the two incremental sensitivities are fixed, but the over-all sensitivity varies depending upon the deflection of the meter where the incremental sensitivity is changed. In the remaining specification and claims, the term "sensitivity" will mean "incremental sensitivity"; the ratio of the total input to the total deflection will be termed "over-all sensitivity."

Assuming for the sake of simplicity, that the full scale deflection of the recording device is unity, for relative input voltages between zero and 1, the relation between the galvanometer deflection and the input voltage can be expressed as $D=A\times E$, where D is the deflection, A is a constant and E is the relative input voltage. If the sensitivity of the second scale is ⅕ the sensitivity of the first scale, for example, the galvanometer deflection produced by the relative input voltage above 1 will be $D'=A/5\ (E-1)$, so that the total galvanometer deflection for any relative input voltage greater than 1 can be expressed as

$$D=A+A/5\ (E-1)$$

The over-all sensitivity of the indicating device is then given by

$$D/E=A\left(\frac{4}{5E}+⅕\right)$$

This relation is plotted in Figure 1 of the drawings which shows the manner in which the over-all sensitivity must vary in order to achieve the desired result.

A circuit having the over-all sensitivity characteristic shown in Figure 1 is illustrated schematically in Figure 2 of the drawings. In view of the manner in which this circuit functions, it will be designated for convenience as an electronic addition circuit. In the figure, the solid connecting lines indicate signal circuits; the dotted lines indicate control circuits. In this embodiment, the voltage input is supplied to two voltage amplifiers 20 and 21, the relative gains of which are in the ratio of 5 to 1, respectively.

The amplifiers 20 and 21 are controlled electronically by a "trigger" circuit 22 which cuts out the amplifier 20 with a relative gain of 5 and cuts in the amplifier 21 with a relative gain of 1, when the input reaches a certain level. The outputs of the amplifiers 20 and 21 are fed to a conventional rectifier circuit 23 which is connected in series with another rectifier 24 and with the input terminals of an amplifier 25. A galvanometer or indicating instrument 26 is connected to the output terminals of the amplifier 25.

The "trigger" control circuit 22 also controls the rectifier 24 and renders it inoperative so long as the input voltage is less than the predetermined level at which it is desired to change the sensitivity of the recording apparatus. When the value of the input voltage reaches that predetermined level, the "trigger" control circuit 22 renders the amplifier 20 inoperative and the amplifier 21 and rectifier 24 operative. Thus, only the output of the amplifier 21 is fed to the rectifier 23.

A voltage Ec is fed to the rectifier 24, the voltage Ec being of such a value that the output of the rectifier 24 is exactly equal to the output of the rectifier 23 when the sensitivity change is made. Since the rectifiers 23 and 24 are connected in series, the voltage applied to the input terminals of the amplifier 25 is equal to the sum of a voltage proportional to the fixed voltage Ec impressed upon the rectifier 24 and a voltage corresponding to the voltage at the input terminals of the rectifier 23. Accordingly, this circuit has the over-all sensitivity characteristics illustrated in the curve shown in Figure 1.

Figure 3 illustrates an electronic subtraction circuit which also has the over-all sensitivity characteristic illustrated in the curve shown in Figure 1 of the drawings. In this circuit the input voltage is fed into two conventional-type amplifiers 27 and 28 whose gain ratio is 5 to 4, for example. The output of amplifier 27 is fed to a conventional type rectifier 29 and the output of the amplifier 28 is fed to a similar rectifier 30.

The rectifier 30 which is associated with the lower gain amplifier 28 is biased with a variable direct current voltage from a suitable source 31. This voltage is adjusted to render the rectifier 30 inoperative for all values of the voltage input less than the value corresponding to the full scale value on the most sensitive scale, and operative for all voltage values above this value. The outputs of the rectifiers 29 and 30 are connected in series opposition and the difference between their voltage outputs is fed to a direct current amplifier 32, if desired, the output of which is impressed upon the recording galvanometer 33.

The relationships between the direct current outputs of the rectifiers 29 and 30 and the difference between those outputs is shown in Figure 4 of the drawings. In that figure the straight line 34 defines the relationship between the output voltage of the rectifier 29 and the input voltage to the control circuit. The curve 35 illustrates the relationship between the output of the rectifier 30 and the input to the circuit. The curve 36, 36a, shows the relationship between the difference between the output voltages of the rectifiers 29 and 30 and the input voltage. From this curve, it is apparent that for voltage inputs between zero and 1 the recording system has one sensitivity whereas for any increment in voltage above unity the sensitivity is reduced.

An electronic subtraction circuit of the type shown in Figure 3 of the drawings is illustrated in greater detail in Figure 5. Referring to Figure 5, the voltage representing the quantity which is to be recorded or indicated is impressed upon the input terminals 37 and 38 of the primary winding 39 of a transformer 40. The secondary winding 41 of the transformer 40 is connected to a conventional type potentiometer 42, one terminal 43 of which is connected by a conductor 44 to the control grid 45 of a conventional

type vacuum tube 46. The other terminal 47 of the potentiometer 42 is connected to ground as shown in the figure.

The variable contact 48 of the potentiometer 42 is connected to the control grid 49 of a second conventional type vacuum tube 50. The cathodes 51 and 52 of the vacuum tubes 46 and 50, respectively, are connected through suitable grid biasing resistors 53 and 54, respectively, to ground as shown in the figure.

The plate electrode 55 of the vacuum tube 46 is connected through a conductor 56 to one terminal of the primary winding 57 of an output transformer 58, the other terminal of the primary winding 57 being connected to the positive terminal 59 of a source of direct current voltage 60, the negative terminal 61 of which is connected to ground. In similar fashion, the plate electrode 62 of the vacuum tube 50 is connected by a conductor 63 to one terminal of the primary winding 64 of the transformer 65, the other terminal of the primary winding 64 being connected to the positive terminal 59 of the source of voltage 60.

One terminal of the secondary winding 66 of the transformer 58 is connected to an output terminal 67 and the other terminal of the winding 66 is connected to the plate electrode 68 of a conventional type rectifier tube 69. In similar fashion, one terminal of the secondary winding 70 of the transformer 65 is connected in series with a biasing voltage 71 to a second output terminal 72 and its other terminal is connected to the plate electrode 73 of a second rectifier tube 74.

The cathodes 75 and 76, respectively, of the rectifiers 74 and 69 are connected together and to the midpoint 77 between two series connected resistors 78 and 79 which are connected across the output terminals 67 and 72. Suitable condensers 80 and 81 are connected in parallel with the resistors 78 and 79, respectively, for the purpose of smoothing out the direct current output of the rectifiers 69 and 74.

The biasing voltage 71 is suitably chosen so that the rectifier tube 74 is rendered inoperative for all values of the relative input voltage applied to the input terminals 37 and 38 of the transformer 40 between zero and 1. Hence, for all such values only the rectifier 69 functions and the voltage at the output terminals 67 and 72 is proportional to the voltage developed across the resistance 78. This condition of operation is indicated by the curve 36 in Figure 4.

As soon as the relative input voltage applied to the terminals 37 and 38 of the transformer 40 increases to a value greater than 1, the rectifier 74 begins to function so that the output voltage at the terminals 67 and 72 is proportional to the difference between the voltages existing across the resistances 78 and 79. By adjusting the movable contact 48 of the potentiometer 42, the sensitivity of the circuit for voltages greater than 1 may be changed to any desired value within the limits of the amplifier system. This condition of operation is illustrated by the curve 36a in Figure 4 which is seen to be proportional to the difference between curves 34 and 35. By adjusting the bias voltage 71, the point at which the sensitivity begins to change can be controlled.

It will be understood that both of the amplifier tubes 46 and 50 are operative for all signal values applied to the terminals 37 and 38. However, because of the biasing voltage 71, only the rectifier 69 is operative for relative signal values between zero and 1, while both the rectifiers 69 and 74 are operative for relative signal values greater than 1.

Instead of using two separate amplifiers to provide the desired gain ratio, the transformers 58 and 65 could be specially designed to have the proper turn ratios to effect this result. Also, resistance capacity coupling could be employed instead of the transformer coupling shown in Figure 5. Moreover, the rectifiers 69 and 74 may be embodied in a single envelope instead of being two separate tubes.

As indicated above, it is preferred to use sensitivity change circuits of the type shown in Figure 5 with a recording system of the type shown in Doll Patent No. 2,258,700. In such a system, two beams of light are used, which are angularly spaced apart sufficiently to cause the second beam to come on the record strip as or before the first one goes off. In order to illustrate the manner of operation of this modification, there is shown in Figure 7 a representative curve such as might be recorded by the recording apparatus described above.

Considering now Figs. 5 and 7, a record strip 82 is shown moving as a function of one variable quantity in the direction of the arrow. It is assumed that the other variable quantity is a voltage which is impressed upon a galvanometer G having two annularly spaced apart mirrors M1 and M2 mounted on the movable element C thereof. One mirror M1 is so mounted that the beam which it directs to the record strip 82 moves from one end to the other end of the record strip 82 in traveling from zero to full scale deflection.

The second mirror M2 is angularly spaced from the first mirror M1 so that the light beam which it directs to the record strip 82 first comes on the lower edge of the record strip 82 in Fig. 7 or the left side of the record strip 82 in Fig. 5, when the beam directed from the first mirror M1 reaches a certain deflection which may be, for example, ¾ of the full scale deflection. It will also be assumed that the sensitivity of the electronic subtraction circuit of Fig. 5, for any increment of voltage greater than full scale on the more sensitive scale, is ⅓ of the sensitivity between zero and full scale deflection.

As shown in Figure 7, the variable quantity being recorded increases to a value substantially twice the maximum deflection that can be accommodated by the record strip. In the absence of any special arrangement, that part of the curve which goes beyond full scale deflection would not be recorded at all. However, thanks to the two-mirror construction of the galvanometer, as soon as the curve reaches the point 83, which represents about ¾ full scale deflection, the beam from the second mirror M2 comes on the lower edge of the record strip 82 at the point 84.

Furthermore, when the curve recorded by the No. 1 beam continues in the increasing direction and when it reaches the upper end of the record strip 82 at the point 85, the sensitivity of the recorder is automatically changed by the electronic subtraction circuit shown in Figure 5. Thus, the portion of the curve between the points 85 and 86 is recorded by beam No. 2 adjacent the lower edge of the record strip 82, the corresponding points being indicated by the reference characters 87 and 88. This portion of the curve is recorded at reduced sensitivity which, in this particular example, is ⅓ of the sensitivity for full

scale deflection on the more sensitive scale. The relationship between the galvanometer deflection and the relative input voltage for the two beams are illustrated in Figure 6.

It will be noted that the portion 84—87 of the curve recorded by the No. 2 beam is substantially identical with the portion 83—86 recorded by the No. 1 beam and that the portion 88—89 of the No. 2 beam is substantially identical with the portion 86—90 of the No. 1 beam. By designing the elements to operate in this fashion all values will be indicated on the curve or curves without requiring the accurate and delicate adjustments necessary to cause the second beam to come on the record strip 82 precisely as the first beam goes off the scale. Obviously the two beams could be adjusted so that one comes on the scale at the same instant the other leaves. If this is done, the curve traced by the second beam would be recorded lower on the record strip 82, as shown in dotted lines, the points 87' and 88' coinciding with the base line or edge of the record strip 82.

As indicated above, it is also possible to change the sensitivity of the recording or indicating device at a predetermined deflection by suitable mechanical means. For example, the galvanometer sensitivity may be altered by shunts and/or series resistances controlled by means of relays. It is a very simply matter to provide different sensitivities for a galvanometer, all of which permit the galvanometer to be critically damped, if desired. The mechanical system might also comprise switched attenuators or volume controls for changing the sensitivity of an amplifier. Also, the output of an amplifier could be altered in many different ways such as by changing transformer taps, for example.

All such mechanical systems, that is, systems which make use of a mechanical switching device, will change the sensitivity instantaneously. The change may be made in small steps if desired, but in such case the change between steps will be instantaneous. Hence, for the sake of brevity and simplicity, only one switching step involving the change from one sensitivity to another will be considered in the following description. For convenience, the switching mechanism will be referred to as a relay although any other suitable device may be employed for this purpose.

A representative circuit utilizing mechanical apparatus for instantaneously changing the sensitivity of an indicating or recording device is illustrated in Figure 8 of the drawings. Referring to this figure, the input voltage which is to be recorded or indicated is impressed upon the input terminals 91 and 92 of the primary winding 93 of a conventional type transformer 94, the secondary winding 95 of which is connected to the terminals of a potentiometer 96.

Connected in parallel with the potentiometer 96 by means of the conductors 97 and 98 is a voltage divider circuit comprising the series connected resistors 99 and 100. The values of the resistors 99 and 100 are so chosen that the ratio between the resistance of the resistor 99 and the sum of the resistances 99 and 100 is the same as the ratio between the two sensitivities that are to be employed.

The common point 101 between the resistors 99 and 100 is connected by a conductor 102 to one contact 103 of a conventional type relay 104, a second contact 105 of which is connected by a conductor 106 to the terminal 107 of the resistance 100. The contacts 103 and 105 are adapted to be selectively engaged by a contact arm 108 actuated by the winding 109 of the relay 104. Normally the contact arm 108 is maintained in engagement with the contact 105 by means of a spring, for example (not known), when the relay 104 is not energized. When the relay 104 is energized, the contact arm 108 is moved out of engagement with the contact 105 and into engagement with the contact 103. The contact arm 108 is connected by a conductor 110 to the control grid 111 of a conventional type vacuum tube 112, the cathode 113 of which is connected through a grid biasing resistor 114 to the conductor 97 which is grounded at the point 115.

The plate circuit of the tube 112 includes the primary winding 116 of a transformer 117, one terminal of which is connected to the positive terminal 118 of a source of direct current voltage 119, the other terminal 119a of which is connected to the ground 115. The secondary winding 118a of the transformer 117 is connected to the output terminals 120 and 121 which are connected to the recorder 122.

The recorder 122 may be similar to the recorder employed in the Fig. 5 embodiment and it may comprise, for example, a galvanometer having a mirror M1 on the movable element C thereof which directs a beam of light to a sensitive record strip 82a.

It will be noted that when the contact arm 108 of the relay 104 engages the contact 105 the full voltage output from the secondary winding 95 of the transformer 94 is impressed upon the control grid 111 of the tube 112. This is the normal position of the relay 104 and it corresponds to the most sensitive scale on the recorder 122. On the other hand, when the contact arm 108 of the relay 104 engages the contact 103, only a fraction of the output voltage from the secondary winding 95 of the transformer 94 is impressed upon the control grid 111 of the vacuum tube 112. This fraction appears across the resistor 99 and is transmitted through the conductor 102, the contact 103 engaging contact arm 108, and the conductor 110 to the control grid 111 of the tube 112. As indicated above, this fraction is determined by the values of the resistances 99 and 100 which are so chosen that the sensitivity of the recorder 122 will be reduced to the desired value.

In order that the sensitivity may be instantaneously changed from one value to another when a predetermined value of the input voltage is reached, it is necessary to provide means for energizing the relay 104 to cause contact arm 108 thereof to disengage the contact 105 and engage the contact 103 in the proper manner to accomplish this. A circuit suitable for this purpose is shown in Figure 8, which circuit comprises a vacuum tube actuating circuit 123, a trigger control circuit 124, a differential control circuit 125 and an amplifier 126. While it is preferred to employ the amplifier 126, it may be omitted if desired.

Referring again to Figure 8, the amplifier circuit 126 comprises a conventional type vacuum tube 127, the control grid 128 of which is connected to the movable contact 129 of the potentiometer 96 and the cathode 130 of which is connected through a grid biasing resistor 131 to ground. The plate circuit of the tube 127 includes the primary winding 132 of a transformer 133 which forms part of the differential control circuit 125. One terminal of the secondary winding 134 of the transformer 133 is connected to the plate 135 of a conventional type rectifier 136 and by a conductor 137 to the cathode 138 of a similar rectifier 139.

The cathode 140 of the rectifier 136 and the plate 141 of the rectifier 139 are connected to the terminals 142 and 143, respectively, of a pair of series connected resistors 144 and 145. The common point 146 between the resistors 144 and 145 is connected to the other terminal of the secondary winding 134 of the transformer 133. Connected in parallel with the resistors 144 and 145 are a pair of suitable condensers 148 and 149 which serve to smooth out the outputs of the rectifiers 136 and 139.

The terminal 142 on the resistor 144 is connected in series with a biasing battery 150 to the control grid 151 of a conventional type pentode 152. In similar fashion, the terminal 143 of the resistance 145 is connected to the control grid 153 of a second pentode 154. The cathodes 155 and 156 of the pentodes 152 and 154, respectively, are connected together and to the common point 145 between the resistors 144 and 145. The plate electrode 157 of the pentode 154 is connected by a conductor 158 in series with the resistances 159 and 160 to the negative terminal 161 of a source of direct current voltage 162, the positive terminal 163 of which is connected to the cathodes 155 and 156 of the pentodes 152 and 154.

Similarly, the plate electrode 164 of the pentode 152 is connected by a conductor 165 in series with the resistors 166 and 167 to the negative terminal 161 of the source of voltage 162. The suppressor grid 168 of the pentode 152 is connected to the common point 169 between the resistors 159 and 160 and the suppressor grid 170 of the pentode 154 is connected to the common point 171 between the resistors 166 and 167. Connected across the plate electrodes 164 and 157 of the pentodes 152 and 154 are the series connected plate resistors 172 and 173, the common point 174 of which is connected to the positive terminal 175 of a source of direct current voltage 176, the negative terminal of which is connected to the positive terminal 163 of the source of voltage 162. The screen grids 176 and 177 of the pentodes 152 and 154, respectively, are also connected to the positive terminal 175 of the source of voltage 176.

The common point 169 between the resistors 159 and 160 is connected by a conductor 178 to the control grid 179 of a pentode 180 in the circuit 123 for energizing the relay 104. The cathode 181 and the suppressor grid 182 of the pentode 180 are tied together and to the cathodes 155 and 156 of the pentodes 152 and 154. The screen grid 183 of the pentode 180 is connected by a conductor 184 to the positive terminal 175 of the source of voltage 176. The plate electrode 185 is connected by a conductor 186 to one terminal of the winding 109 of the relay 104, the other terminal of which is connected by the conductor 187 to the screen grid 183 of the pentode 180.

When the input voltage applied to the terminals 91 and 92 of the primary winding 93 of the transformer 94 is zero, no voltage exists across the resistors 144 and 145. The contact arm 108 of the relay is in engagement with the contact 105 and the recorder 122 is operating on its most sensitive scale. As the input to the terminals 91 and 92 of the transformer 94 increases, the terminal 143 of the resistance 145 becomes more negative. Meanwhile, the terminal 142 of the resistance 144 becomes more positive so that the negative potential applied to the control grid 151 of the pentode 152 decreases.

The trigger control circuit 124 is so designed that when the value of the variable is near the value corresponding to the full scale deflection of the recorder 122 on its most sensitive scale, the plate current of the tube 154 suddenly drops to zero or to a very small value and the plate current of the tube 152 rises to a maximum value so that the control is switched from one tube to another. At this point, the voltage of the plate 157 of the pentode 154 is essentially that of the battery 176. Trigger control circuits generally comprise circuits in which one or more currents or voltages change abruptly from one stable value to another stable value at a critical value of some voltage or resistance and change back abruptly to approximately their original values at a different critical value of the controlling voltage or resistance. They are well known in the art and it will not be necessary to describe in detail the manner in which the control is abruptly switched from one of the vacuum tubes 152 and 154 to the other.

When this occurs, the potential of the common point 169 between the resistors 159 and 160 becomes less negative, making the control grid 179 of the pentode 180 less negative and increasing the current in its plate circuit to a value sufficient to operate the relay 104. The operation of the relay 104 causes the contact arm 108 thereof to disengage the contact 105 and engage the contact 103. This action instantaneously reduces the sensitivity of the recording device to a value determined by the relative magnitudes of the resistances 99 and 100, as pointed out above.

The point where the reduction in sensitivity takes place can be controlled by adjusting the variable contact 129 of the potentiometer 96 or by changing the magnitude of the voltage supplied by the biasing battery 150. As indicated above, this point is so chosen that the change in sensitivity takes place when the value of the variable is near the value corresponding to the full scale deflection of the recorder 122 on its most sensitive scale.

A representative curve such as might be recorded with the apparatus illustrated in Figure 8 is shown in Figure 10. In this figure, the record strip 82*a* is shown moving in the direction of the arrow, the curve being recorded by a moving light beam. Here again, the maximum value of the variable being recorded is about twice the full scale deflection that can be recorded on the width of the record strip 82*a*. In order to obtain a useful record, the circuit shown in Figure 8 is adjusted so that when the curve 194 approaches the upper edge of the record strip 82*a* at about the point 195, the relay 104 is actuated, reducing the sensitivity of the recorder to ⅕ its normal sensitivity, for example.

This action causes the curve 194 to drop almost immediately to the point 197. The portion of the curve between the points 195 and 196 at the upper edge of the record strip 82*a* is then recorded at reduced sensitivity near the lower edge of the record strip 82*a*, the corresponding points being designated by the reference characters 197 and 198. The drop of the curve from the point 195 to the point 197 and its rise from the point 198 to the point 196 will occur so rapidly that this portion of the curve will be exposed for a shorter period of time than the rest of the curve. Accordingly, the points in the curve where the sensitivity has been changed may be readily distinguished from other variations therein.

The relation between the galvanometer deflection and the relative input voltage for sensitivity

control apparatus of the type illustrated in Figure 8 is shown in Figure 9.

If the pentode 154 is a gas type tube, there may be sufficient current in its plate circuit to energize the winding of a relay directly. Accordingly, in such case, the winding 109 of the relay 104 may be connected between the plate electrode 157 and the common point 174 as shown in Figure 11 of the drawings. Where this is done, the circuit 123 for energizing the relay 104 may be eliminated.

It is also possible to utilize the voltage developed across the resistance 173 in the apparatus Figure 8 to actuate the relay 104, if desired. As shown in Figure 12, this may be accomplished by connecting the control grid 188 of the vacuum tube 189 in series with a grid biasing voltage 190 to the plate electrode 157 of the pentode 154, the cathode 191 of the tube 189 being connected to the common point 174. In this modification, the winding 109 of the relay 104 is connected in series with the plate electrode 192 of the tube 189 to the positive terminal 193 of a source of direct current voltage 199, the negative terminal 200 of which is connected to the plate electrode 157 of the pentode 154 as shown in the figure.

It will be understood from the foregoing that the invention provides new and improved apparatus for changing the sensitivity of an indicating or recording device when a predetermined value of the quantity to be recorded has been reached. By designing the sensitivity control apparatus to reduce the sensitivity to a predetermined value when the value of the variable being recorded is equal to or greater than the maximum deflection obtainable on a scale of one sensitivity, satisfactory recordings may be obtained, on a relatively narrow record strip, both of slight variations in small magnitudes of a variable and larger variations in greater values of the variable.

It will also be understood that numerous changes may be made in the specific embodiments of the invention described above, within the scope of the invention. For example, the over-all sensitivity characteristics shown in Figure 1 of the drawings may be approximated by suitably designed vacuum tube amplifiers or by delayed automatic volume control circuits of the type employed in conventional radio receivers. Many other modifications will be readily apparent to those skilled in the art. Furthermore, the several relative sensitivities given above in the description of several embodiments of the invention are intended to be examples merely and any others may be used as desired.

The several embodiments of the invention that have been described above are intended merely to be illustrative and not restrictive of the invention. Those embodiments are susceptible to numerous changes in form and detail within the scope of the following claims.

We claim:

1. In recording apparatus, sensitivity control apparatus comprising two signal amplifiers of different substantially fixed gains, rectifying means for each of said amplifiers, means for controlling one of said rectifying means to render it operative only for signal values above said predetermined magnitude, a circuit network for combining the outputs of said rectifiers in substantially the same time relation as exists between said outputs at said rectifiers, and indicating means linearly responsive to said combined outputs.

2. In indicating apparatus, sensitivity control apparatus comprising an input transformer having a primary winding and a secondary winding, two electronic amplifiers connected to said secondary winding and having relatively high and relatively low gain characteristics, respectively, means for rectifying the output of said relatively high gain amplifier, means for rectifying the output of said relatively low gain amplifier, means for rendering said last named rectifying means inoperative until the output of said relatively low gain amplifier reaches a predetermined value, means for combining the outputs of said rectifying means in opposition in substantially the same time relation as exists between said outputs at said rectifying means, and indicating means linearly responsive to the combined outputs of said rectifying means.

3. In sensitivity control apparatus for recording apparatus, a control circuit comprising a transformer having primary and secondary windings, a pair of series connected resistors, a conductor connecting one terminal of said transformer secondary winding and the outer terminal of one of said resistors, rectifying means connected in series with said conductor, a second conductor connecting said one terminal of said transformer secondary winding to the outer terminal of the second of said resistors, rectifying means connected in series with said second conductor, a third conductor connecting the second terminal of said transformer secondary winding to the midpoint between said two resistors, said rectifying means being so connected that the outer terminals of said resistors are positive and negative respectively, a trigger control circuit including two electronic tubes each having a control grid, and electrical connections between the outer terminals of said two resistors and the control grids of said tubes.

4. In an indicating apparatus, the combination of two signal amplifiers and associated rectifiers having different substantially fixed gains for all signal values, means for rendering one of said rectifiers inoperative until the output of the other rectifier reaches a predetermined value, means for rendering said one of said rectifiers operative to provide an output when the output of said other rectifier exceeds said predetermined value, and an indicator connected to said rectifiers and responsive to the outputs thereof, the respective gains of said signal amplifiers being so chosen as to change the ratio between increments in indicator input and corresponding increments in the signal inputs to said amplifiers to a different fixed value when said predetermined value of rectifier output is reached.

5. A system for controlling the sensitivity of an indicator to signals of varying magnitude, comprising an electrical circuit for receiving signals and providing a first input for an indicator that is in substantially fixed proportion to the magnitude of said signal, and another input for the indicator that is in a different proportion to the magnitude of said signal, electronic means having a biasing potential applied thereto electrically connected to said electrical circuit, said electronic means being responsive to a change in biasing potential for selectively supplying said inputs to said indicator, and means responsive to the magnitude of said signals for changing the biasing potential applied to said electronic means to supply one of said inputs to the indicator in one range of signal magnitudes and to supply the

other of said inputs to said indicator in a different range of signal magnitudes.

6. In a device for recording electrical signal values; the combination of a longitudinally moveable record strip, a meter having at least one member that is deflected in response to variations in electrical signal values and being provided with recording means cooperating with said one member for applying markings to said record strip in substantially linear proportion to variations in said signal values, said member having a maximum deflection sufficient to apply markings over a relatively wide zone, an amplifying system receiving signal inputs and providing inputs for said meter, means in said amplifying system for establishing a predetermined ratio between inputs to said meter and signal inputs to said amplifying system, and means in said amplifying system rendered operative at a predetermined signal value for reducing the ratio between inputs to said meter and signal inputs to said amplifying system, whereby the sensitivity of said meter will be changed at said predetermined signal value to reduce the amount of deflection of said member per unit of change in signal value and maintain all of the markings within a zone of said strip that is substantially narrower than said wide zone.

7. In a device for recording electrical signal values; the combination of a longitudinally moveable record strip, a meter having a mirror that is deflected in response to variation in electrical signal values for directing a light beam onto said record strip and displacing said beam relatively to said strip in substantially linear proportion to said signal values, said mirror having a maximum deflection sufficient to deflect said light beam over a relatively wide zone, an amplifying system receiving signal inputs and providing inputs for said meter, means in said amplifying system for establishing a predetermined ratio between inputs to said meter and signal inputs to said amplifying system, and means in said amplifying system rendered operative at a predetermined signal value for reducing the ratio between inputs to said meter and signal inputs to said amplifying system, whereby the sensitivity of said meter will be changed at said predetermined signal value to reduce the maximum deflection of said mirror to less than the deflection produced by said predetermined signal value, throughout a range of signal values higher than said predetermined signal value, and thereby maintain said markings in a zone of said record strip of substantially less width than said wide zone.

8. In a device for recording electrical signal values, the combination of a longitudinally moveable photosensitive record strip, a meter having a pair of mirrors for directing beams of light onto said record strip that are deflected simultaneously in substantially linear proportion to variations in electrical signal values, said mirrors being constructed and arranged to cause one of said beams to enter one edge of a zone on said record strip as the other beam leaves the opposite edge of said zone, an amplifying system receiving signal inputs and providing inputs for said meter, means in said amplifying system for establishing a predetermined ratio between inputs to said meter and signal inputs to said amplifying system, and means in said amplifying system rendered operative at a predetermined signal value for reducing the ratio between inputs to said meter and signal inputs to said amplifying system, whereby the sensitivity of said meter, and the amount of deflection of said mirrors will be reduced in proportion to variations in signal values as said other beam leaves said opposite edge of said zone.

9. In a recording device for recording electrical values within a zone of predetermined width extending lengthwise of a movable record strip, including a longitudinally moveable record strip, and an indicator having at least one member for producing markings on said record strip that is deflected in response to electrical signals received by said indicator; the combination of first means for receiving alternating current signals and providing a first direct current input for said indicator substantially proportional to the value of said signals, a second means for receiving said alternating current signals and providing a second direct current input for the indicator substantially proportional to the values of said signals but of a smaller proportion than said first means, and control means electrically connected to said first and second means for rendering said first means effective to provide an input only within a predetermined lower range of magnitudes of said signal values, and for rendering said second means effective to provide an input only in a higher range of magnitudes of said signal values.

10. In a device for recording electrical signal values, including a longitudinally moveable record strip, and a meter having a mirror that is deflected in response to variation in the electrical input thereto for directing a light beam onto said record strip and displacing said beam relatively to said strip in substantially linear proportion to said meter input; the combination of a first means for receiving alternating current signals and providing a first direct current input for the meter substantially proportional to the value of said signals, a second means for receiving said alternating current signals and providing a second direct current input for the indicator substantially proportional to the values of said signals but of a smaller proportion than said first means, and control means electrically connected to said first and second means for rendering said first means effective to provide an input only within a predetermined lower range of magnitudes of said signal values, and for rendering said second means effective to provide an input only in a higher range of magnitudes of said signal values.

11. In a device for recording electrical signal values, the combination of a longitudinally moveable photosensitive record strip, a meter having a pair of mirrors for directing beams of light onto said record strip that are deflected simultaneously in substantially linear proportion to variations in the electrical input thereto, said mirrors being constructed and arranged to cause one of said beams to enter one edge of a zone on said record strip as the other beam leaves the opposite edge of said zone, a first means for receiving alternating current signals and providing a first direct current input for the meter substantially proportional to the value of said signals, a second means for receiving said alternating current signals and providing a second direct current input for the meter substantially proportional to the values of said signals but of a smaller proportion than said first means, and control means electrically connected to said first and second means for rendering said first means effective to provide an input only within a predetermined lower range of magnitudes of said signal values,

corresponding to the deflection of said other beam from one edge to the opposite edge of the recording zone of the record strip, and for rendering said second means effective to provide an input only in a higher range of magnitudes of said signal values, whereby signal magnitudes in said higher range will be recorded at reduced sensitivity by said one beam as said other beam leaves the opposite edge of said zone.

12. In a device for recording electrical signal values, the combination of a longitudinally moveable photosensitive record strip, a meter having a pair of mirrors for directing beams of light onto said record strip that are deflected simultaneously in substantially linear proportion to variations in the electrical input thereto, said mirrors being constructed and arranged to cause one of said beams to enter one edge of a zone on said record strip as the other beam leaves the opposite edge of said zone, first amplifier and rectifier means for receiving alternating current signals and providing a first direct current input for the meter that is a substantially constant multiple of the magnitude of the signal, second amplifier and rectifier means for receiving alternating current signals and providing a second direct current input for the meter that is a substantially constant multiple of the magnitude of said signal, said multiples being different, means connecting said first and second direct current inputs for the meter in opposition, and means electrically connected to said second amplifier and rectifier means for rendering said second amplifier and rectifier means ineffective in a lower range of magnitudes of said signal corresponding to the deflection of said other beam from one edge to the opposite edge of the recording zone of the record strip, and for rendering it effective in a higher range of signal magnitudes, whereby signal magnitudes in said higher range will be recorded at reduced sensitivity by said one beam as said other beam leaves the opposite edge of said zone.

13. In recording mechanism, the combination of electrical means receiving an input signal and providing an output that is fed to a recorder, means for changing the ratio between said output and input, an amplifier receiving said signal and having an output, and a trigger control circuit responsive to a predetermined output level from said amplifier for controlling said ratio changing means, said trigger control circuit being automatically actuated to operate said ratio changing means when said predetermined amplifier output is reached, whereby inputs less than said predetermined value will be recorded at one fixed sensitivity and inputs greater than said predetermined value will be recorded at a different sensitivity.

14. In recording apparatus of the character described, including recording means, the combination of means receiving an input signal proportional to a variable and providing an output that is fed to said recording means, switching means for changing the ratio between said output and said input, means for providing a voltage proportional to said variable quantity, means for rectifying said voltage, and an electronic trigger control circuit controlled by said rectified voltage for actuating said switching means.

15. An apparatus for controlling the sensitivity of a recorder, comprising a first signal amplifier providing an output that is a substantially constant multiple of the magnitude of the signal, a second signal amplifier providing a second output that is a substantially constant multiple of the magnitude of said signal, said multiples being different, electrical means connected to said amplifiers for combining the outputs of said amplifiers in opposition, a recorder receiving the output of said electrical means, and means for preventing said second amplifier from contributing to the input for said recorder in a lower range of magnitudes of said signal and for permitting said second amplifier to contribute to the input for said recorder in a higher range of signal magnitudes, the gains of said amplifiers being so chosen as to change the ratio between increments in the total recorder input and the corresponding increments in the signal input to said amplifiers to a different fixed value when said second amplifier becomes effective.

16. In a recording device for recording electrical values within a zone of predetermined width extending lengthwise of a movable record strip; the combination of a longitudinally movable record strip, a meter having at least one member that is deflected in response to electrical signals received by said meter and having means cooperating with said member for applying markings to said record strip, said member being capable of deflection relatively to said record strip to apply markings over a wide zone, an amplifier system responsive to inputs of signal values for supplying signals to said meter, means in said amplifier system for establishing a first ratio between said signals and said signal values throughout a predetermined lower range of signal values whereby said member will be deflected to apply markings to a zone of said record strip substantially narrower than said wide zone, and means in said amplifier system rendered operative at a predetermined signal value for changing said first ratio to a lower ratio throughout a predetermined higher range of signal values whereby said member will be deflected to apply markings only in a zone of said record strip of less width than the difference between the widths of said wide zone and said narrower zone.

HENRI-GEORGES DOLL.
GERALD K. MILLER.

REFERENCES CITED

The following references are of record in the file of this patent:

UNITED STATES PATENTS

Number	Name	Date
399,292	Siemens	Mar. 12, 1889
454,270	Herrick	June 16, 1891
683,831	Arcioni	Oct. 1, 1901
1,057,035	Carichoff	Mar. 25, 1913
1,257,514	Meyer	Feb. 26, 1918
1,481,284	Deardorff	Jan. 22, 1924
1,506,754	Hutchison	Sept. 2, 1924
1,654,085	Lorance	Dec. 27, 1927
1,661,555	Bryce	Mar. 6, 1928
1,784,522	Harrison	Dec. 9, 1930
1,883,582	Cole	Oct. 18, 1932
1,869,209	Mead, Jr.	July 26, 1932
2,001,622	Mc Caa	May 14, 1935
2,004,724	Herzog	June 11, 1935
2,014,102	Conklin	Sept. 10, 1935
2,023,860	Stanton	Dec. 10, 1935
2,077,833	Gieringer	Apr. 20, 1937
2,079,485	Bousman	May 4, 1937

(Other references on following page)

UNITED STATES PATENTS

Number	Name	Date
2,147,729	Wurmser	Feb. 21, 1939
2,151,474	Johnson	Mar. 21, 1939
2,158,198	Prescott	May 16, 1939
2,181,321	Friedlander	Nov. 28, 1939
2,207,908	Beecher	July 16, 1940
2,251,594	Mayne	Aug. 5, 1941
2,267,631	Fairchild	Dec. 23, 1941
2,267,682	Fairchild et al.	Dec. 23, 1941
2,272,849	Perkins	Feb. 10, 1942
2,297,543	Eberhardt et al.	Sept. 29, 1942
2,415,880	Hassler	Feb. 18, 1947

FOREIGN PATENTS

Number	Country	Date
178,860	Germany	Oct. 22, 1906
394,328	Great Britain	Sept. 1933