Office de la Propriété Intellectuelle du Canada
Un organisme d'Industrie Canada

Canadian Intellectual Property Office
An agency of Industry Canada

CA 2693395 C 2012/11/06

(11)(21) **2 693 395**

(12) **BREVET CANADIEN**
CANADIAN PATENT

(13) **C**

(86) Date de dépôt PCT/PCT Filing Date: 2008/07/11
(87) Date publication PCT/PCT Publication Date: 2009/01/22
(45) Date de délivrance/Issue Date: 2012/11/06
(85) Entrée phase nationale/National Entry: 2010/01/13
(86) N° demande PCT/PCT Application No.: EP 2008/005701
(87) N° publication PCT/PCT Publication No.: 2009/010247
(30) Priorités/Priorities: 2007/07/13 (US11/879,045); 2007/07/13 (EP07013815.1)

(51) Cl.Int./Int.Cl. *A61B 17/86* (2006.01), *A61B 17/88* (2006.01)

(72) Inventeurs/Inventors:
DORAWA, KLAUS, DE;
SCHWAGER, MANUEL, CH;
RAST, CHRISTOPHER, US;
AESCHLIMANN, MARCEL, CH;
SEILER, PHILIPP, CH

(73) Propriétaire/Owner:
STRYKER TRAUMA GMBH, DE

(74) Agent: BORDEN LADNER GERVAIS LLP

(54) Titre : DISPOSITIF POUR LA FIXATION DE FRACTURES OSSEUSES
(54) Title: DEVICE FOR FIXATION OF BONE FRACTURES

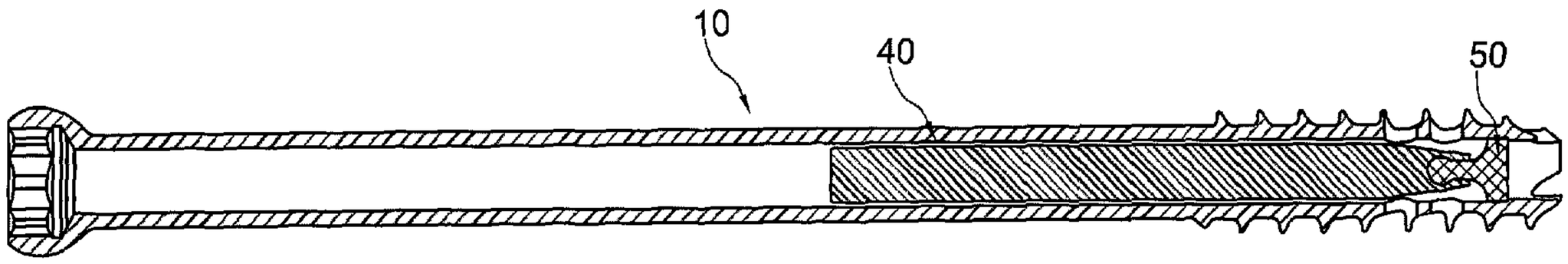

(57) Abrégé/Abstract:
A device and method for fixation of fractures having a screw (10) comprising a shank with an end portion on the outer surface of which a thread (12) is configured, and comprising a through bore. The through bore comprises two' bore portions differing in diameter (16, 17). The step (18) in the diameter between the these bore portions is arranged adjoining the end of the screw having the thread. This step in diameter can support a insert (30, 50) which in turn supports a polymer pin (20, 40) when the latter is pressurized in the screw. Together with an applied ultrasonic vibration the pressure fluidizes the polymer pin and presses the material through holes configured in the wall of the screw.

(12) INTERNATIONAL APPLICATION PUBLISHED UNDER THE PATENT COOPERATION TREATY (PCT)

(19) World Intellectual Property Organization
International Bureau

(43) International Publication Date
22 January 2009 (22.01.2009)

PCT

(10) International Publication Number
WO 2009/010247 A1

(51) International Patent Classification:
A61B 17/86 (2006.01) *A61B 17/88* (2006.01)

(21) International Application Number:
PCT/EP2008/005701

(22) International Filing Date: 11 July 2008 (11.07.2008)

(25) Filing Language: English

(26) Publication Language: English

(30) Priority Data:
07013815.1 13 July 2007 (13.07.2007) EP
11/879,045 13 July 2007 (13.07.2007) US

(71) Applicant *(for all designated States except US)*: **STRYKER TRAUMA GMBH** [DE/DE]; Prof.-Küntscher-Strasse 1-5, 24232 Schönkirchen/Kiel (DE).

(72) Inventors; and
(75) Inventors/Applicants *(for US only)*: **DORAWA, Klaus** [DE/DE]; Scharkoppel 5e, 24232 Schönkirchen (DE). **SCHWAGER, Manuel** [CH/CH]; Milchbuckstrasse 30, CH-8057 Zürich (CH).

(74) Agent: **SCHMITZ, Alexander**; Maiwald Patentanwalts GmbH, Elisenhof, Elisenstrasse 3, 80335 München (DE).

(81) Designated States *(unless otherwise indicated, for every kind of national protection available)*: AE, AG, AL, AM, AO, AT, AU, AZ, BA, BB, BG, BH, BR, BW, BY, BZ, CA, CH, CN, CO, CR, CU, CZ, DE, DK, DM, DO, DZ, EC, EE, EG, ES, FI, GB, GD, GE, GH, GM, GT, HN, HR, HU, ID, IL, IN, IS, JP, KE, KG, KM, KN, KP, KR, KZ, LA, LC, LK, LR, LS, LT, LU, LY, MA, MD, ME, MG, MK, MN, MW, MX, MY, MZ, NA, NG, NI, NO, NZ, OM, PG, PH, PL, PT, RO, RS, RU, SC, SD, SE, SG, SK, SL, SM, ST, SV, SY, TJ, TM, TN, TR, TT, TZ, UA, UG, US, UZ, VC, VN, ZA, ZM, ZW.

(84) Designated States *(unless otherwise indicated, for every kind of regional protection available)*: ARIPO (BW, GH, GM, KE, LS, MW, MZ, NA, SD, SL, SZ, TZ, UG, ZM, ZW), Eurasian (AM, AZ, BY, KG, KZ, MD, RU, TJ, TM), European (AT, BE, BG, CH, CY, CZ, DE, DK, EE, ES, FI, FR, GB, GR, HR, HU, IE, IS, IT, LT, LU, LV, MC, MT, NL, NO, PL, PT, RO, SE, SI, SK, TR), OAPI (BF, BJ, CF, CG, CI, CM, GA, GN, GQ, GW, ML, MR, NE, SN, TD, TG).

Published:
— *with international search report*
— *before the expiration of the time limit for amending the claims and to be republished in the event of receipt of amendments*

(54) Title: DEVICE FOR FIXATION OF BONE FRACTURES

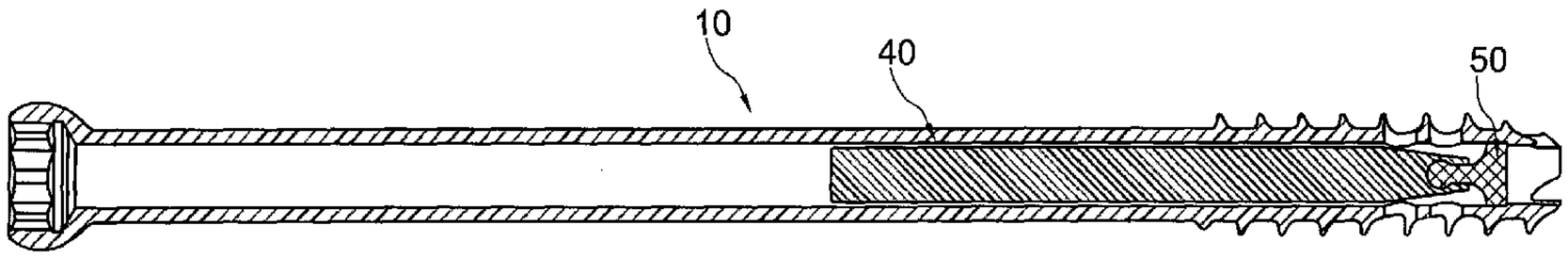

Fig. 10

(57) Abstract: A device and method for fixation of fractures having a screw (10) comprising a shank with an end portion on the outer surface of which a thread (12) is configured, and comprising a through bore. The through bore comprises two' bore portions differing in diameter (16, 17). The step (18) in the diameter between the these bore portions is arranged adjoining the end of the screw having the thread. This step in diameter can support a insert (30, 50) which in turn supports a polymer pin (20, 40) when the latter is pressurized in the screw. Together with an applied ultrasonic vibration the pressure fluidizes the polymer pin and presses the material through holes configured in the wall of the screw.

WO 2009/010247 A1

Device for fixation of bone fractures

BACKGROUND OF THE INVENTION

The invention relates in general to sonic fusion technology, it relates more particularly to a device and a method for the fixation of fractures, with a screw for augmenting within a fractured object, wherein said object might be, for example, a bone or a wooden or plastic object like furniture.

Known from US patent 4,653,489 is a system wherein a fixation cement is introduced through a screw into a portion of a bone afflicted by osteoporosis. Femural neck fractures as well as distal femural fractures can be fixated by means of this device.

The system in accordance with prior art comprises a screw having a flow cavity, i.e. an axial through bore through which bone cement can be introduced into the portion at the tip of the screw. The bone cement is advanced by a device which is releasably attached to the subsequent end of the screw. This device is similar to a commercially available syringe in comprising substantially a cylindrical barrel and a plunger. The barrel forms a cavity in which the plunger is movable to and fro.

In use of this prior art device the fixation cement is filled into the barrel, after which the plunger is urged against the cement. By applying manual compression force the fixation cement is jetted into the axial through bore of the screw. Due to the pressure the fixation cement is adequately fluidized so that it can pass through the proximal end of the screw into the bone, as a result of which the screw is augmented in the bone.

This system has the drawback that the manual pressure applied to the fixation cement varies, not only basically from application to application but also during the

application itself so that the distribution of the fixation cement within the portion of the bone at the tip of the screw is neither reliable nor even.

SUMMERY OF THE INVENTION

An object of the invention is to define a device and a method by means of which a reliable and even augmentation of a screw at an installation site in an object can now be assured.

This is achieved by the subject matter of each independent claim. Further preferred embodiments read from the dependent claims.

Generally, a device for fixation of a fracture, having a screw comprising a shank having a first threaded end and having along its longitudinal center line an axial through bore having a first bore portion with a first diameter and a second bore portion with a second diameter, wherein the first diameter is larger than the second diameter and the second bore portion is adjacent the first shank end, and a step in the bore between the first and the second bore portions.

Further, a method for fixation of a fracture comprises the steps of screwing a screw having an axial bore therein with transverse passageways connecting the bore with an outer surface of the screw into an object across a fracture site; combining a polymer pin with a insert; inserting the polymer pin together with the insert into the axial through bore in the screw; pressuring and vibrating the polymer pin, wherein the polymer pin is supported by the insert which is in turn supported by a step in the diameter in the through bore, resulting in the polymer pin being fluidized at its tip, the fluidized polymer material being pressed out of the screw.

This object is achieved in accordance with the invention by the screw having the features as recited in the respective independent claims. Further preferred embodiments read from the dependent claims.

BRIEF DESCRIPTION OF THE DRAWINGS

The invention will now be detailled by way of a preferred embodiments with reference to the attached drawings in which:

FIG. 1 is a section view of a screw in accordance with the invention.

FIG. 2 is a detail view of the tip of the screw as shown in FIG. 1.

FIG. 3 is a view of a polymer pin in accordance with a first embodiment of the invention.

FIGs. 4a and 4b are a side view and respectively a plan view of an insert in accordance with the first embodiment of the invention.

FIG. 5 is a view of a polymer pin in accordance with a second embodiment of the invention.

FIG. 6 is a detail view of the tip portion of the polymer pin in accordance with the second embodiment of the invention.

FIG. 7 is a side view of an insert in accordance with the second embodiment of the invention.

FIG. 8 is a view of the polymer pin together with the insert in accordance with the second embodiment of the invention.

FIG. 9 is a detail view of the tip portion of the polymer pin, together with the insert in accordance with the second embodiment of the invention.

FIG. 10 is a section view of a device for fixation of a fracture in accordance with the invention, with the screw as shown in FIG. 1 in which the polymer pin as shown in FIG 5 and the insert as shown in FIG. 7 are inserted.

FIG. 11 is a detail view of the tip of the device as shown in FIG. 10.

DETAILED DESCRIPTION

Referring now to FIG. 1 there is illustrated a screw 10 in accordance with the invention. The screw comprises a shank and a thread 12 machined in an end portion of the shank, wherein the thread may also cover the shank of the screw full length. In addition, the screw 10 is canulated. Provided along the longitudinal centre line of the screw is a through bore composed of two bore portions 16, 17. The bore portion 16 comprises a first diameter and the bore portion 17 a second diameter, the first diameter being larger than the second diameter. In addition the bore portion 16 forms the main portion of the through bore. Just a small portion adjoining the end of the shank of the screw in which the thread 12 is machined is formed by the bore portion 17. The transition from the bore portion 16 to the bore portion 17 is formed by a step 18 in the diameter. The step 18 in the diameter forms an annular ridge having substantially right-angled edges at the wall of the through bore within the screw. Each edge of the step 18 in the diameter may be machined flat or rounded or conical. Furthermore the position of the step in diameter together with the holes in the wall

can be positioned optionally along the longitudinal centre line and thus the siting of the augmentation can be determined in accordance with the particular application and the desired effect.

In addition, the screw 10 features holes 14 radially configured through the wall of the screw. The holes 14 may be configured in differing directions perpendicular to the longitudinal centre line of the screw and arranged in the end portion with the thread 12. Preferably the holes 14 are arranged in a region of the end portion which also features the bore portion 16. In the embodiment as shown in FIG. 1 two holes 14 each are configured axially juxtaposed in the bore portion 16 and through the thread 12. Furthermore, four such pairs of holes are evenly distributed about the circumference of the screw, in other words, circumferentially spaced by 90°. It is, however, just as possible that three, four, five or more holes may be provided circumferentially and it is not necessary that the holes circumferentially distributed are all at same level. It is, the holes might also be distributed circumferentially along the thread turn. Apart from this, transverse or longitudinal oblong holes, slots, or the like may be provided.

Referring now to FIG. 2 there is illustrated the tip of the screw as shown in FIG. 1 but on a magnified scale, the step 18 in the diameter between the bore portion 16 and bore portion 17 now being particularly evident. Apart from this, a few of the holes 14 are shown which are configured passing through the thread 12 in the bore portion 16.

Referring now to FIG. 3 there is illustrated a polymer pin 20 according to a first embodiment of the invention, elongated in shape and slightly tapered at a conically tapered end 22. Provided in the conically tapered end 22 of the polymer pin 20 is a cavity 24 in the end face. The cavity 24 is substantially cylindrical having a constant diameter and a blunt end. The polymer pin 20 may also be made of other materials

such as for instance a thermoplastic material suitable for augmenting a screw, both resorptive and non-resorptive materials being useful.

Referring now to FIGs. 4a and 4b an insert is shown in a side view and in a plan view. The insert features a substantially disk-shaped end 32 and a substantially pin-shaped end 34. The disk-shaped end 32 has an outer diameter somewhat smaller than the diameter of the bore portion 16 of the screw 10 and somewhat larger than the diameter of the bore portion 17 of the screw 10. The pin-shaped end 34 is configured so that it can be inserted into the cavity 24 in the polymer pin 20.

In another embodiment the insert includes instead of the pin-shaped end a protruding end suitable for snap mounting, the polymer pin in this case having a snap mounting end corresponding to the protruding end. When the insert is snap mounted with the polymer pin, both elements can be inserted together into the screw, it being of advantage when the snap mount comprises a slight clearance when connected. This clearance has the advantage that when the polymer pin is pressurized it can be better fluidized at the joint with the insert to thus easier jetted from the screw into the object easier, wherein said object might be a bone or a furniture or another object made of wood, plastic or another porous material.

In the following, an exemplary embodiment of a snap fit connection between the insert and the polymer pin will be described.

Referring to FIG. 5 there is illustrated a polymer pin 40 according to a second embodiment of the invention, elongated in shape and slightly tapered at a conically tapered end 42. As shown in FIG. 6, a cavity is provided in the end face of the conically tapered end 42 of the polymer pin 40. The cavity comprises a cylindrical portion 44 having a substantially constant diameter, and a ball shaped portion 46.

The hollow cylindrical portion 44 is orientated substantially in the direction of the centre axis of the polymer pin 40 and connects the end surface of the polymer pin with the hollow ball shaped portion 46 inside the polymer pin 40.

The pin 40 may also be made of other materials then polymer, for instance of a thermoplastic material suitable for augmenting a screw, wherein both resorptive and non-resorptive materials being useful.

Referring now to FIG. 7 an insert according to a second embodiment is shown in a side view. The insert includes a substantially disk-shaped end 52 and a substantially pin-shaped portion 54. As for the first embodiment, the disk-shaped end 52 has an outer diameter somewhat smaller than the diameter of the bore portion 16 of the screw 10 and somewhat larger than the diameter of the bore portion 17 of the screw 10. However, the insert according to the second embodiment further comprises a ball head 56 located at an end of the pin-shaped portion 54, opposite to the disc-shaped end 52.

FIGs. 8 and 9 show a combination of an insert and a polymer pin according to the second embodiment of the invention. The ball head 56 together with at least a part of the pin-shaped portion 54 are configured so that they can be inserted into the cavity in the polymer pin 40, the cavity having a correspondingly dimensioned ball-shaped portion 46 and a pin-shaped portion 44.

It is noted that the insert has to be made from a material which is harder with an higher melting temperature than the material of the polymer pin such that the polymer pin will melt at the contact area between the insert and the pin, and a suitable augmentation might be achieved. Preferably, the insert is made of a metal. The insert may alternatively be made of an alloy or a ceramic material. Also a plastic

material is possible, as long as said plastic material of the insert is harder with an higher melting temperature than the chosen material of the pin which should be fluidized.

It is furthermore possible that the insert instead of including a pin-shaped end or a snap mounting end, has a through bore into which a corresponding end of the polymer pin can engage. In this embodiment the polymer material is jetted axially from the screw not only through the holes 14 but also through the hole in the insert. The proportion of the polymer material emerging from the holes and bores can be varied by the size thereof.

Depending on the aspect concerned, a snap mount may also be provided in combination with axial and/or radial holes, it being just as possible, however, to configure the insert integrally with the screw. In this arrangement the step in the diameter between two portions of the bore is configured by a larger difference in diameter; indeed, even an axial blind hole may be configured instead of the axial through bore in the screw.

The following details inserting the screw into a bone. Firstly a K-wire is powered up to the site in a bone at which the screw is to be located. Via the K-wire the screw is then advanced and ultimately screwed into place until it is sited as desired. After insertion of the screw in the bone the K-wire is removed. This procedure makes it necessary that the screw features a full length through bore. This is a popular operation technique because the operator can best check the position of the screw. The K-wire is also used to measure the necessary screw length.

After removal of the K-wire the passageway or through bore along the longitudinal centre line of the screw is free to receive the polymer pin together with the insert, the

tip of the pin shaped end of the insert being inserted into the concavity of the polymer pin.

Referring now to FIGs. 10 and 11, there is illustrated how an insert rests on the step formed by the step 18 in the diameter of the bore in the screw 10, when the polymer pin together with the insert has been inserted facing the direction of the tip. It is in this way that the step 18 in the diameter forms, within the screw, a counterhold for the insert which in turn supports the polymer pin when the polymer pin is pressurized by an ultrasonic handpiece which, for this purpose, is mounted on the free end of the screw. The vibration and pressure generated by the ultrasonic handpiece and applied to the polymer pin fluidizes the polymer pin so that the material of the polymer pin emerges from the radially arranged holes 14 into the bone. It is in this way that the polymer pin furnishes the material for augmenting the screw in the bone.

It is to be noted that the inside-out technology is not just limited to the indications as recited above. In other words, all screw applications which can be supplied by cannulated screws can be potentially supplied by the inside-out technology and thus with the device in accordance with the invention.

Although the invention herein has been described with reference to particular embodiments, it is to be understood that these embodiments are merely illustrative of the principles and applications of the present invention. It is therefore to be understood that numerous modifications may be made to the illustrative embodiments and that other arrangements may be devised without departing from the spirit and scope of the present invention as defined by the appended claims.

Claims

1. A device for fixation of a fracture, having a screw comprising a shank, at the one end portion of which a thread is configured, the screw comprising along its longitudinal centre line a through bore having a first bore portion with a first diameter and a second bore portion with a second diameter, wherein the first diameter is larger than the second diameter and the second bore portion is arranged at the end portion of the shank with the thread, a step in the diameter is configured between the first and the second bore portion, the device further includes an insert and a polymer pin for insertion together into the bore portion of the screw, wherein the insert comprises a disc-shaped portion dimensioned so that is rests on the step in the diameter when the insert is inserted into the screw, and a pin-shaped end, and wherein in the one end of the polymer pin a cavity is configured, corresponding to the pin-shaped end and into which the pin-shaped end is insertable.

2. A device for fixation of a fracture, having a screw comprising a shank, at the one end portion of which a thread is configured, the screw comprising along its longitudinal centre line a through bore having a first bore portion with a first diameter and a second bore portion with a second diameter, wherein the first diameter is larger than the second diameter and the second bore portion is arranged at the end portion of the shank with the thread, a step in the diameter is configured between the first and the second bore portion, the device further includes an insert and a polymer pin for insertion together into the bore portion of the screw, wherein the insert comprises a disc-shaped portion dimensioned so that is rests on the step in the diameter when the insert is inserted into the screw, and a first snap-mounting end, and wherein at the one end of the polymer pin a second snap-mounting end is configured corresponding to the first snap-mounting end with which it is connectable.

3. The device as set forth in claim 1 or 2, wherein the insert is made of a material being harder than the material of the polymer pin.

4. The device as set forth in any one of claims 1 to 3, wherein the screw further comprises holes configured in the wall of the screw in the bore portion and adjoining the step in the diameter.

5. The device as set forth in claim 2, wherein the first snap-mounting end of the insert comprises a pin-shaped portion and a ball head.

6. A non-medical method for fixation of a fracture comprising the steps:
screwing a screw into a fractured object,
combining a polymer pin with an insert,
inserting the polymer pin together with the insert into an axial through bore in the screw,
pressurizing the polymer pin, wherein the polymer pin is supported by the insert which is in turn supported by a step in the diameter in the through bore, resulting in the polymer pin being fluidized at its tip, the fluidized polymer material being pressed out of the screw and augmenting the screw in the object.

7. A non-medical method for fixation of a fracture in an object, comprising:
inserting a fastener having a bore therein and ports for communicating between the bore and the object across a fracture site;
inserting a polymer pin into the bore of the fastener;
ultrasonically melting the polymer pin; and
forcing the melted polymer through the ports in the fastener and into the object, wherein a leading end of the polymer pin contacts an insert, and wherein the bore has an annular step formed therein for contacting the insert, the step formed adjacent the ports in the fastener, the method further comprising mounting the insert on the leading end of the polymer pin and sliding the combination along the bore until the step is contacted.

8. The method as set forth in claim 7, wherein the force applied to the melted polymer is constant as the melted polymer exits the ports.

9. The method as set forth in claim 7, wherein the bore has an open end acting as one of the ports.

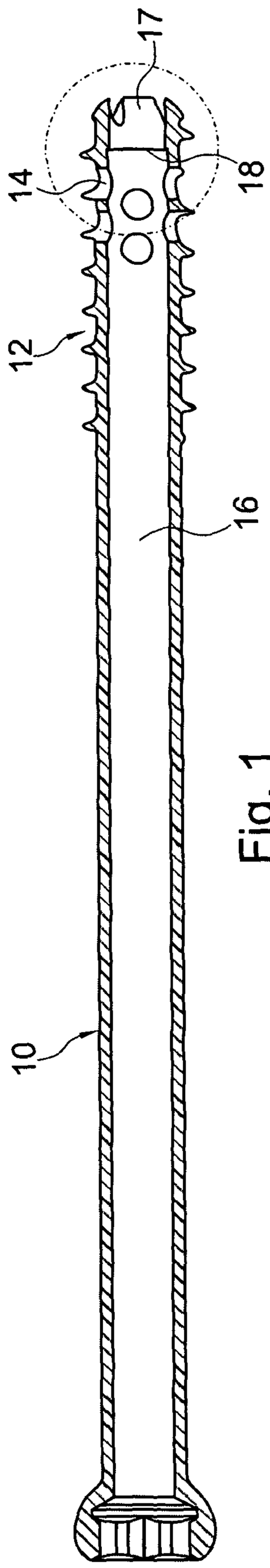

Fig. 1

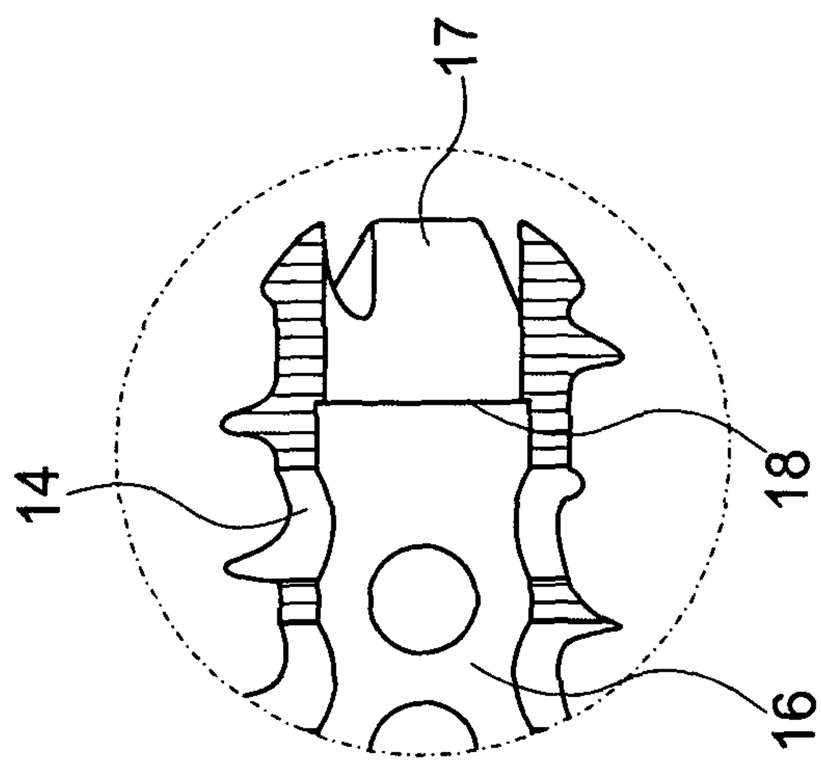

Fig. 2

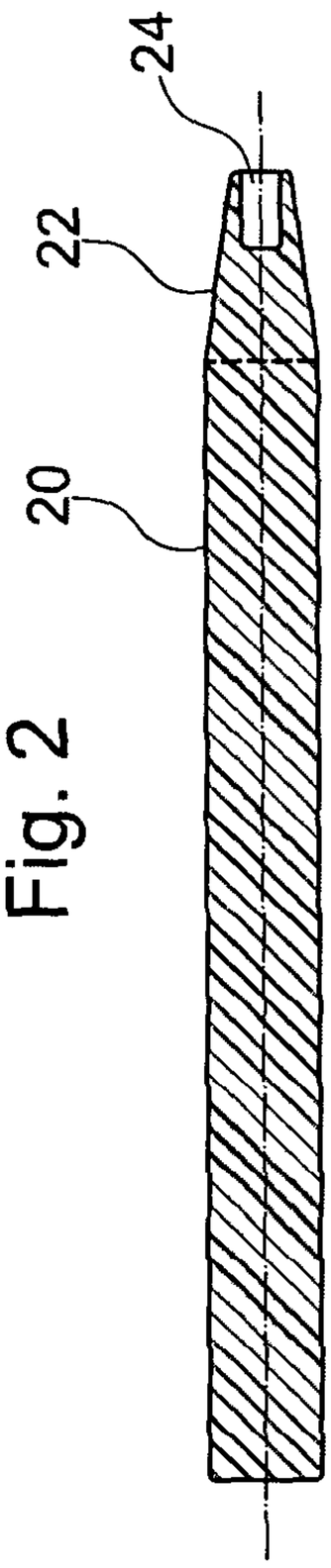

Fig. 3

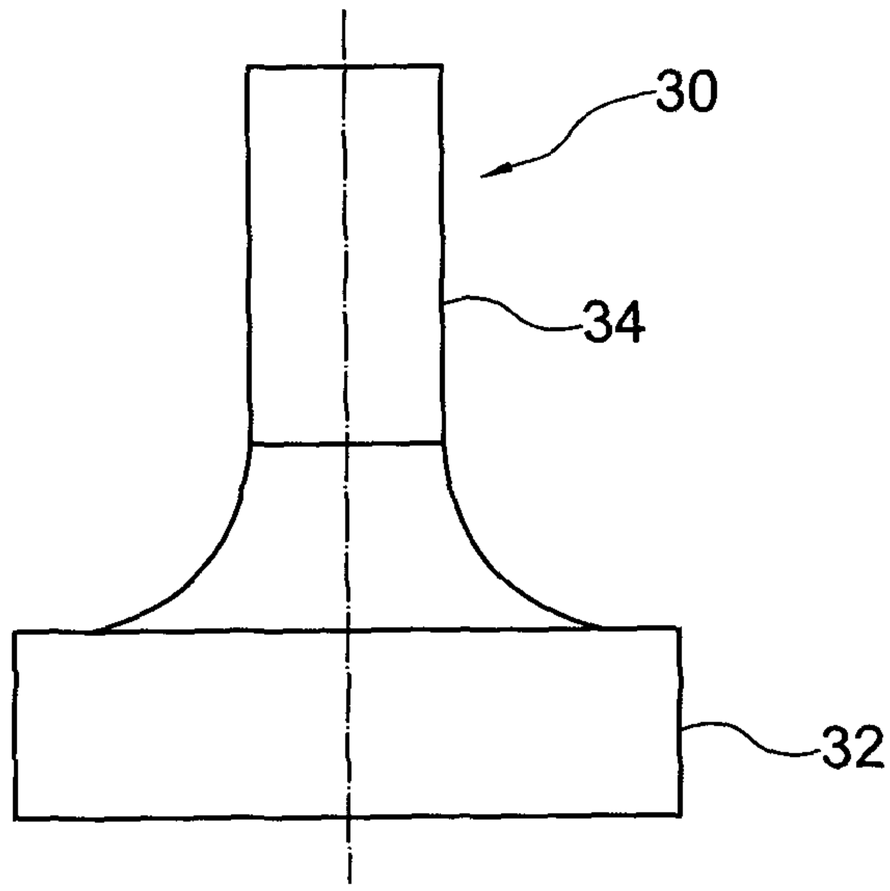

Fig. 4a

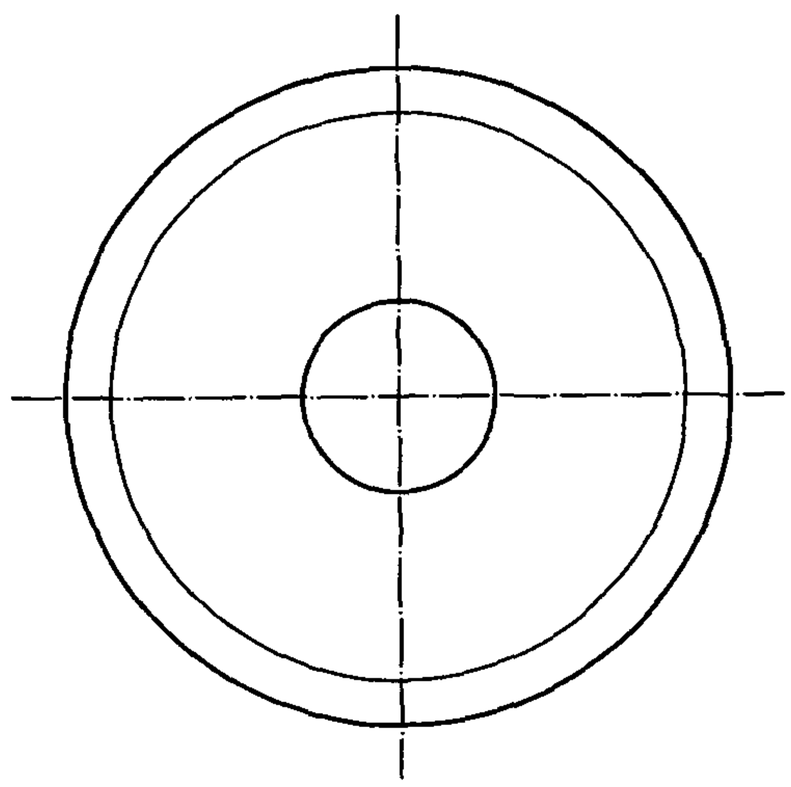

Fig. 4b

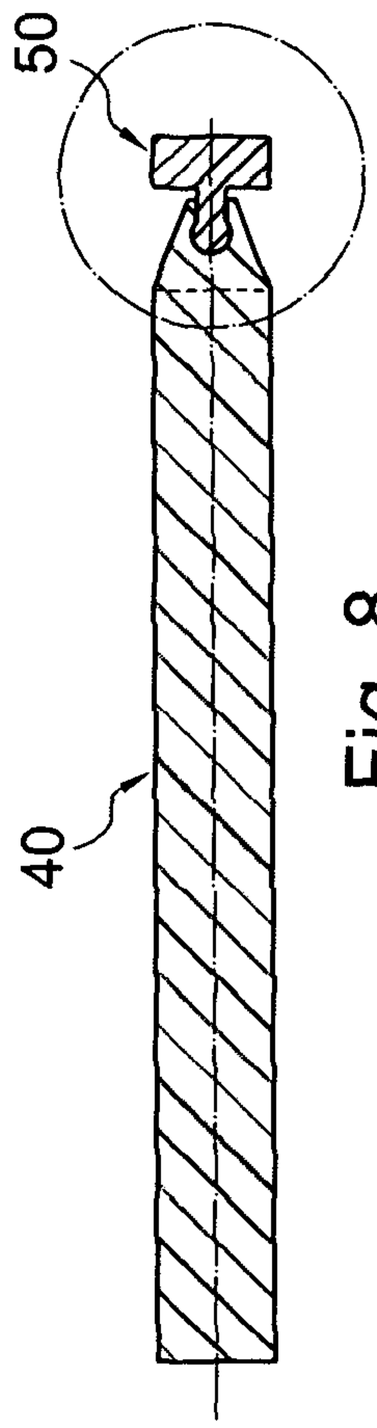

Fig. 8

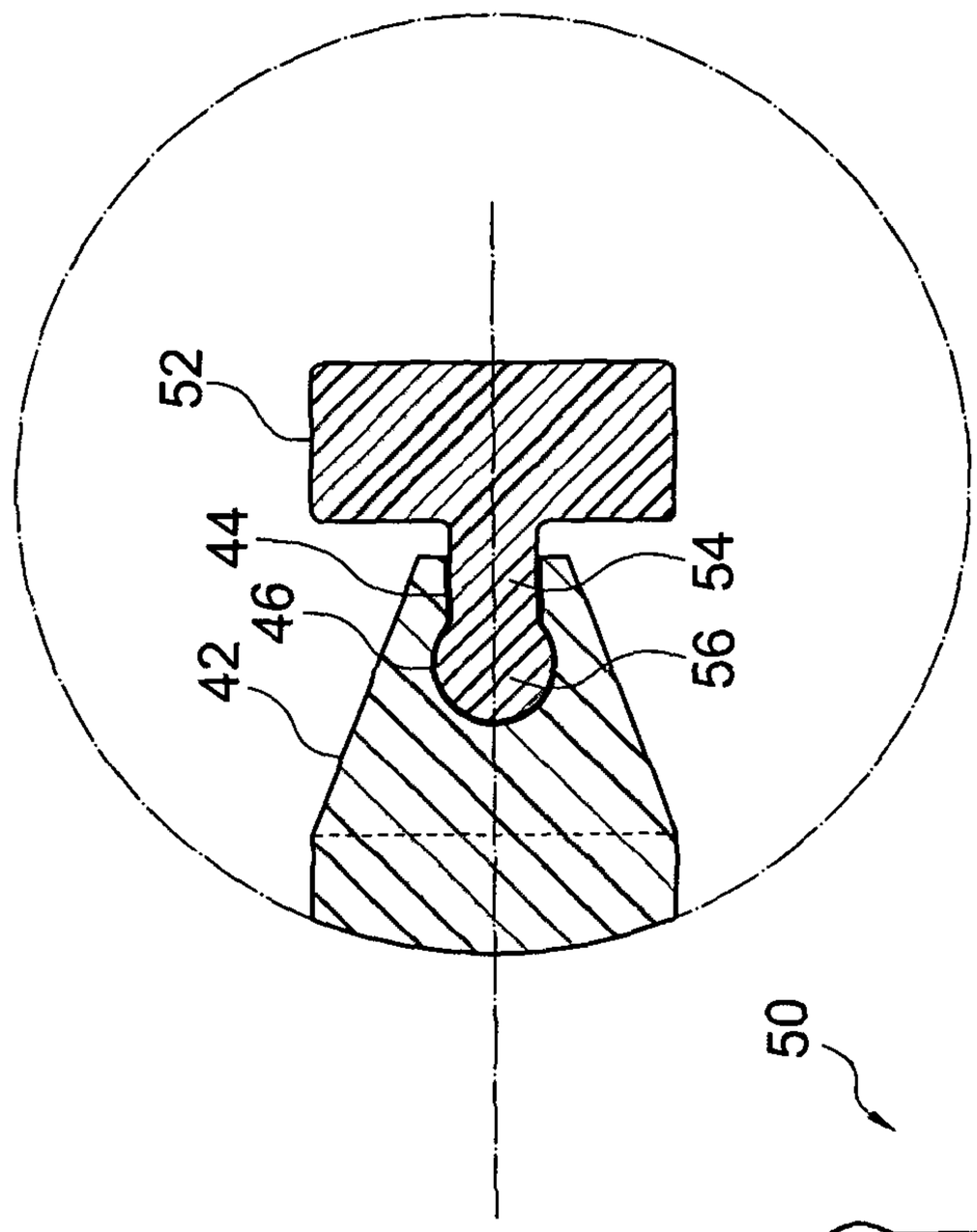

Fig. 9

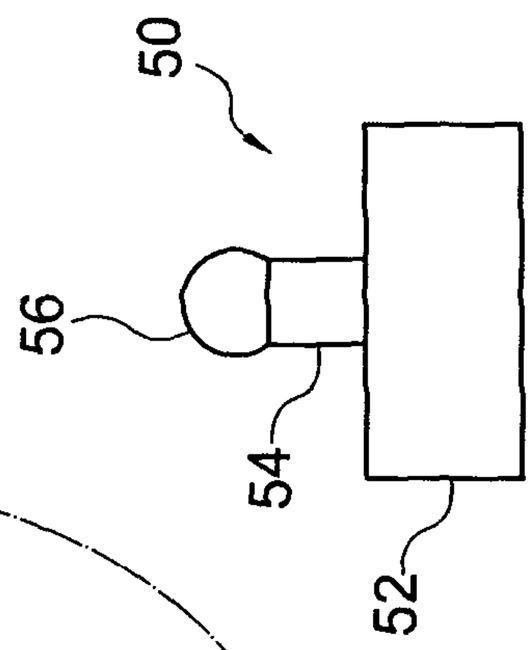

Fig. 7

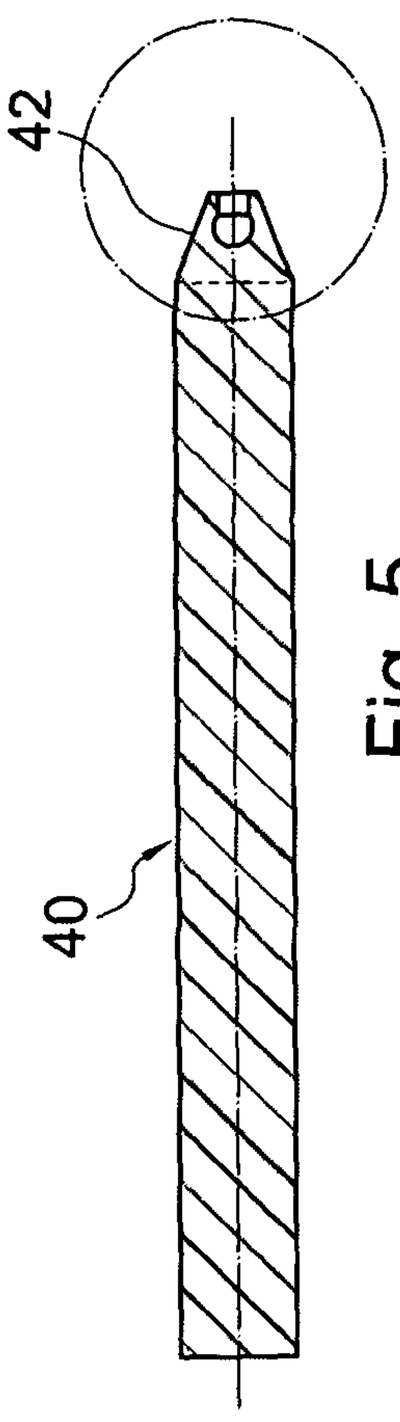

Fig. 5

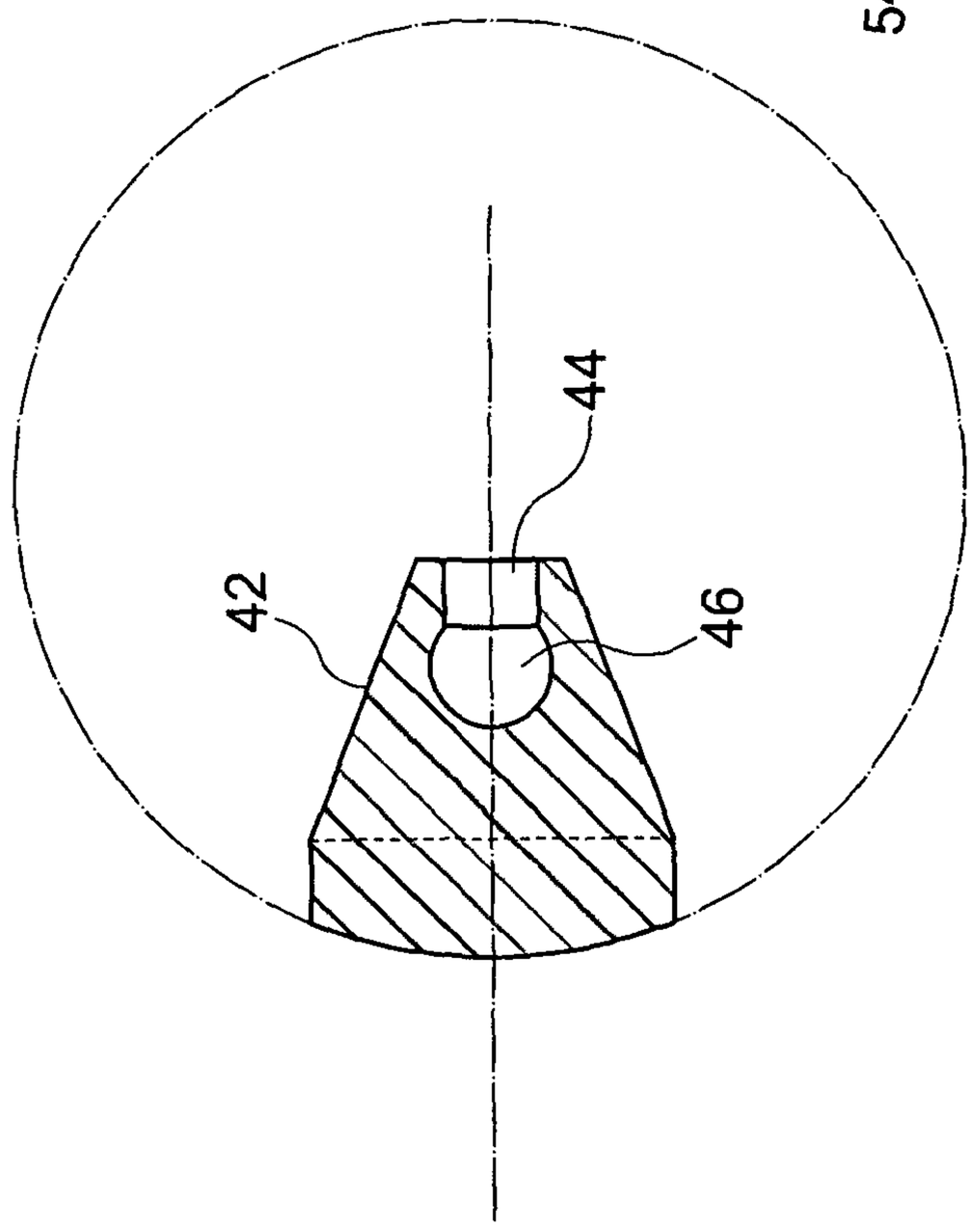

Fig. 6

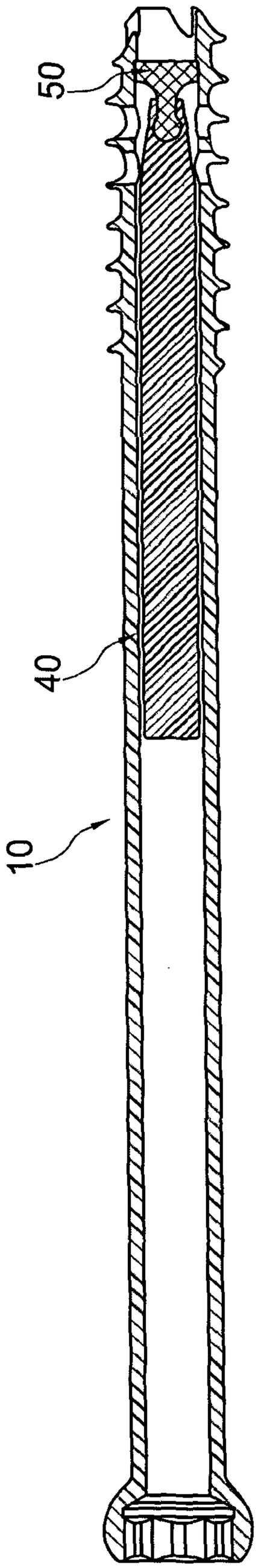

Fig. 10

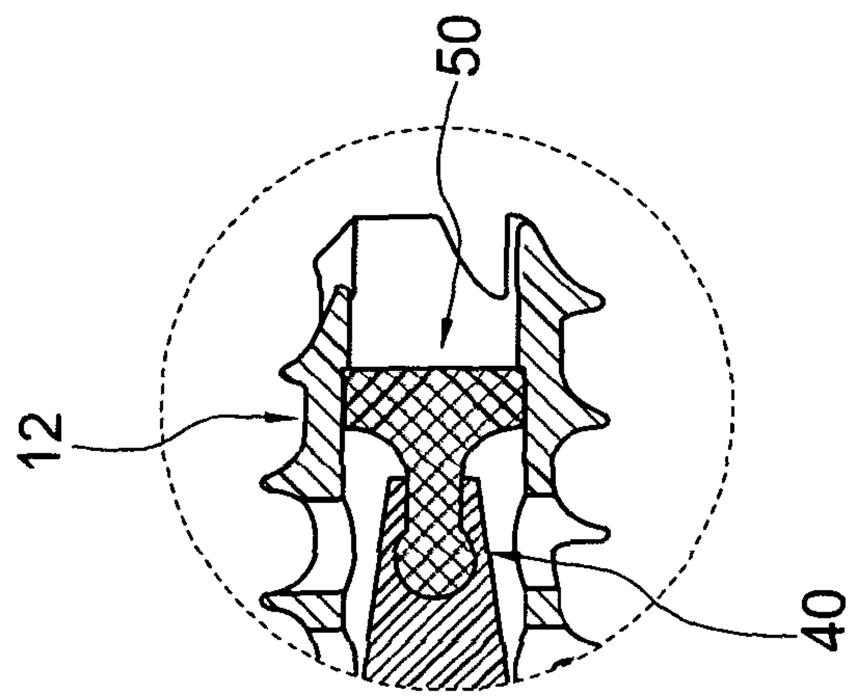

Fig. 11

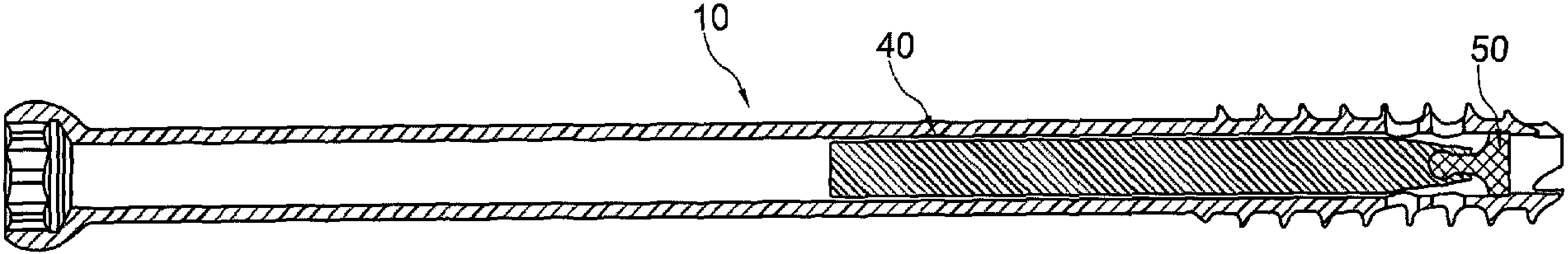
10
40
50