(12) UK Patent Application (19) GB (11) 2588367 (13) A

(43) Date of A Publication 28.04.2021

(21) Application No: 1907316.2

(22) Date of Filing: 24.05.2019

(51) INT CL:
F24F 3/14 (2006.01) *F24F 3/16* (2021.01)
F24F 6/00 (2006.01)

(56) Documents Cited:
EP 2842641 A
CN 203848439 U
CN 109363582 A
CN 204494635 U
CN 201691852 U
CN 108980994 A

(58) Field of Search:
INT CL **F24F**
Other: **EPODOC, WPI, Patent Fulltext**

(71) Applicant(s):
Pujiang Cifang Environmental Protection Technology Co., Ltd.
No. 31 Pantang District,
Houjiang Village Huangzhai Town, Pujiang County,
Jinhua City 322204, Zhejiang Province, China

(72) Inventor(s):
Wang Huimiao

(74) Agent and/or Address for Service:
Jarek
17 Cranbourne Avenue, Plymouth, PL4 8RT,
United Kingdom

(54) Title of the Invention: **An air purification device**
Abstract Title: **An air humidification / purification device**

(57) An air humidification / purification device includes a main body 10, an air outlet cavity 21 disposed on a top end surface of the main body 10 and a venting mechanism 80 disposed in the air outlet cavity 21. The venting mechanism is configured to diffuse and exhaust air from the device in multiple directions. The venting mechanism 80 may comprise a cover plate 22 disposed on a top of the air outlet cavity to protect the air outlet cavity from being polluted by dust. The device includes a middle cavity 60, a belt cavity 17, two crank cavities 41 and water cavities 40. Purification / humidification mechanisms 81 are located in the water cavities, which may comprise pushing plates (42, Fig. 2) slidably disposed in the water cavities and having circular holes (52). Air inlet mechanisms may comprise shutters 12 slidably disposed in grooves 11, threaded blocks 14 fixed with the shutters and slidably disposed in sliding cavities 16, rotatable screws 15 in threaded engagement with the threaded blocks and extending between the sliding cavities and the air outlet cavity, and driven gears 18 fixed on peripheries of the screws in the belt cavity.

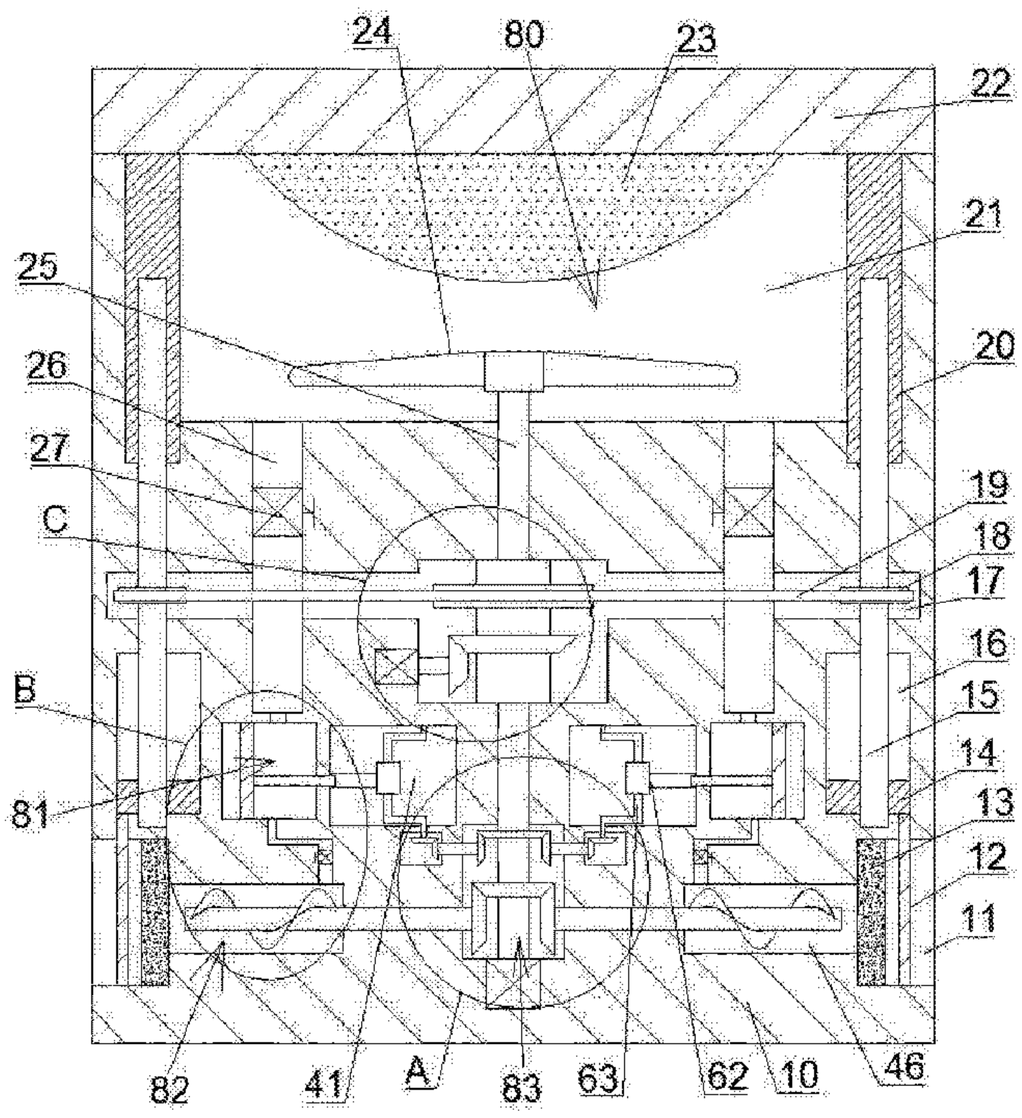

Figure 1

GB 2588367 A

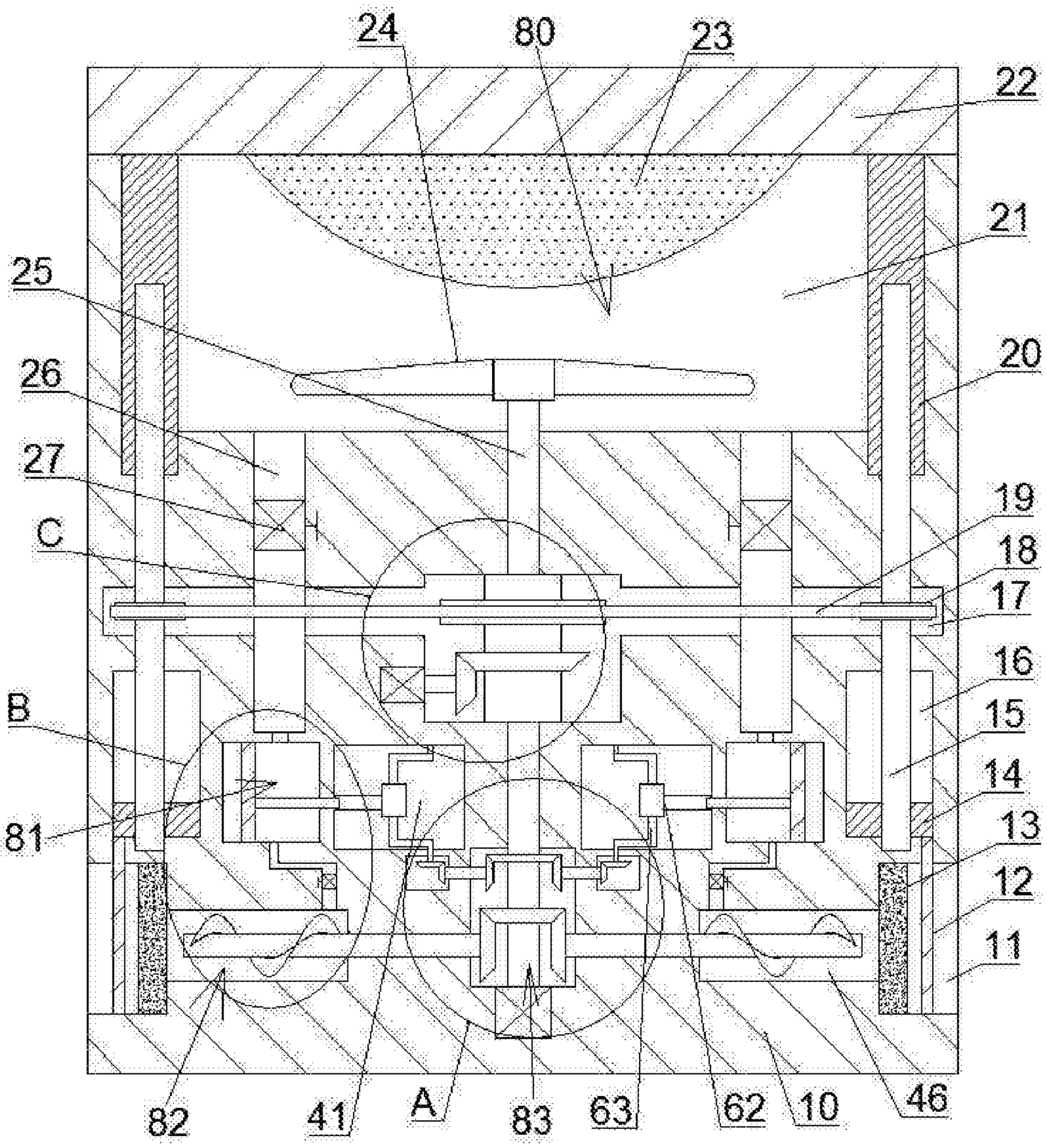
24
80
23
22
21
25
20
26
27
19
C
18
17
16
B
15
14
81
13
12
11
82
41
A
83
63
62
10
46

Figure 1

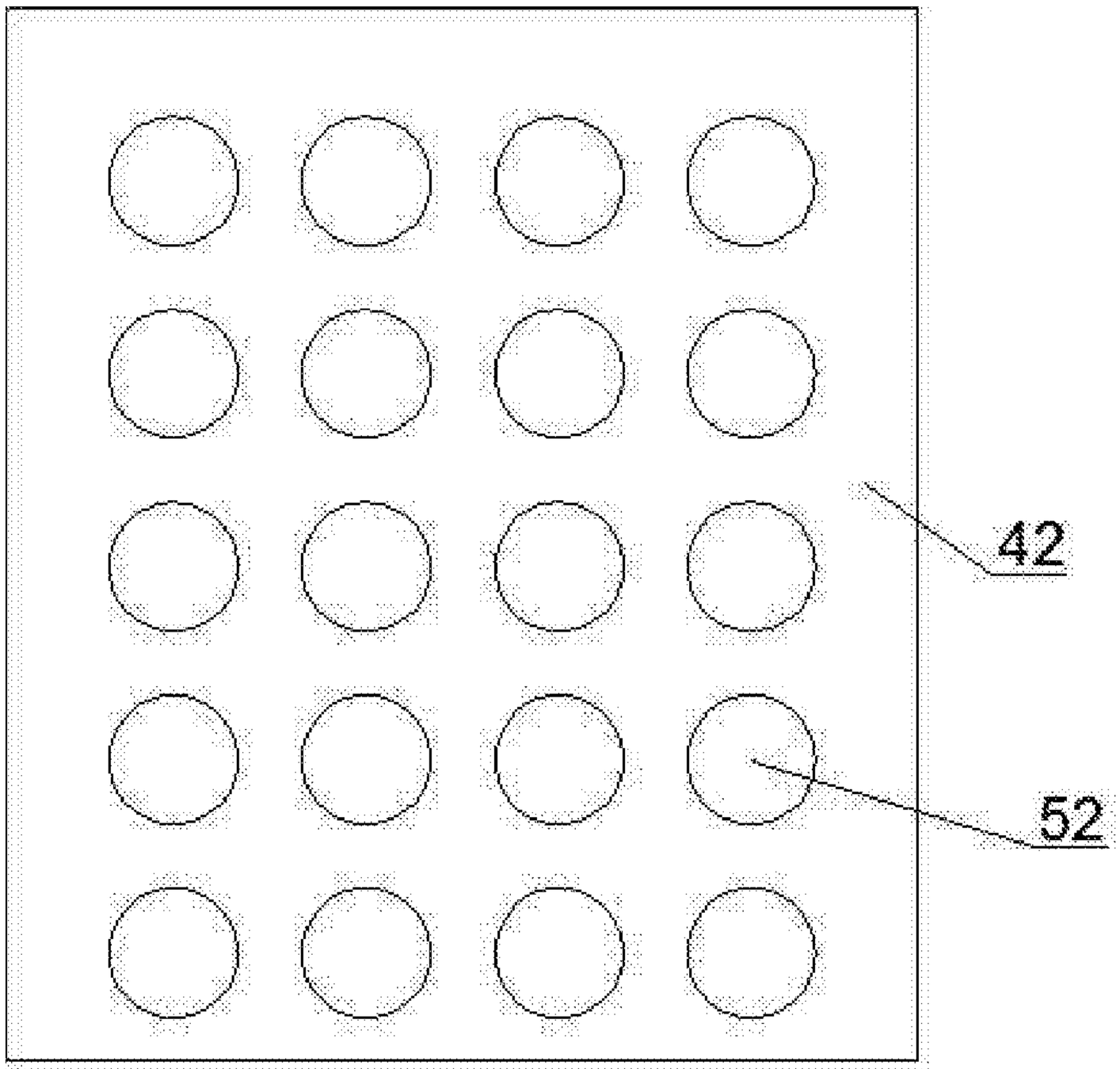

Figure 2

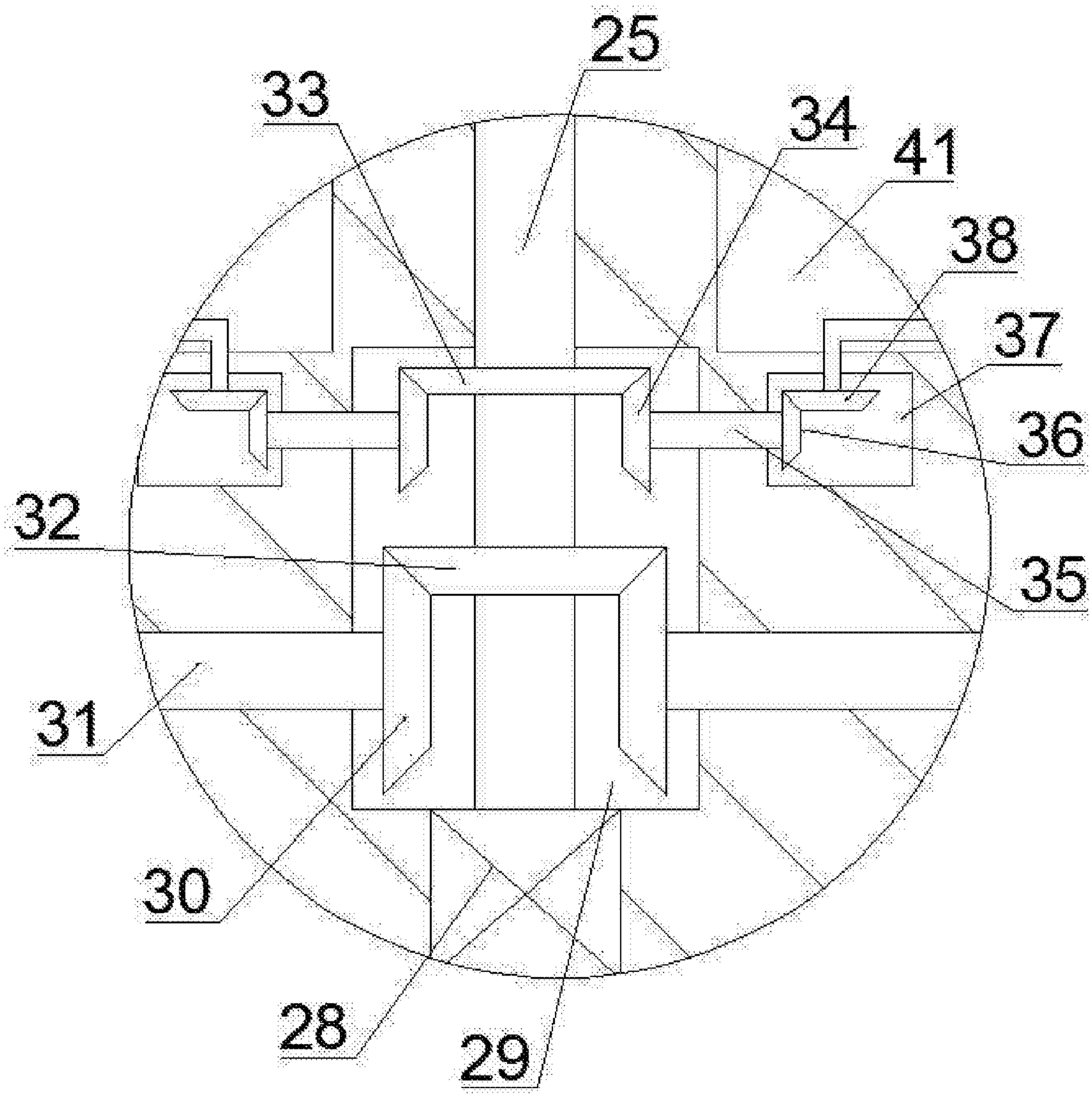

Figure 3

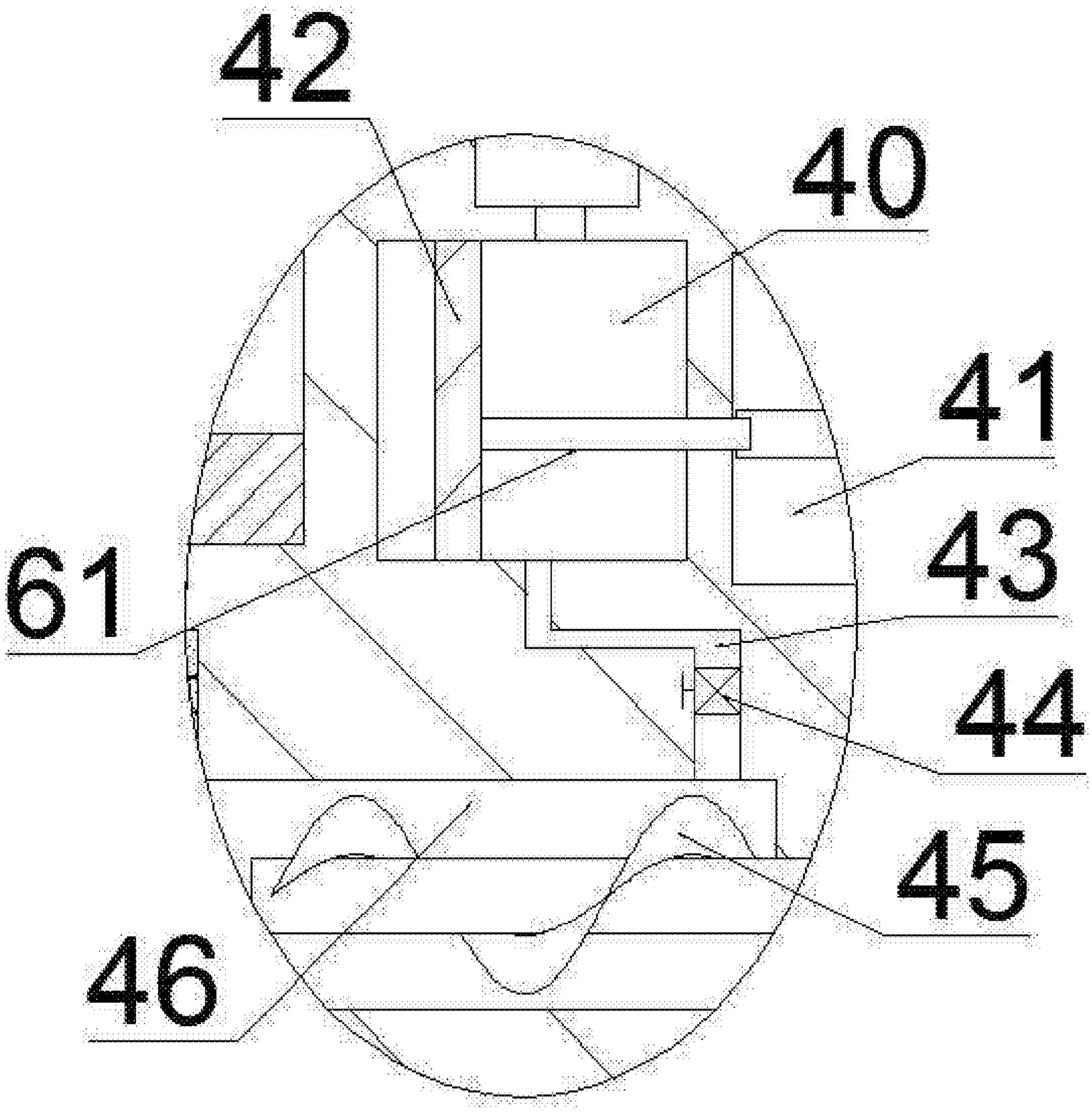

Figure 4

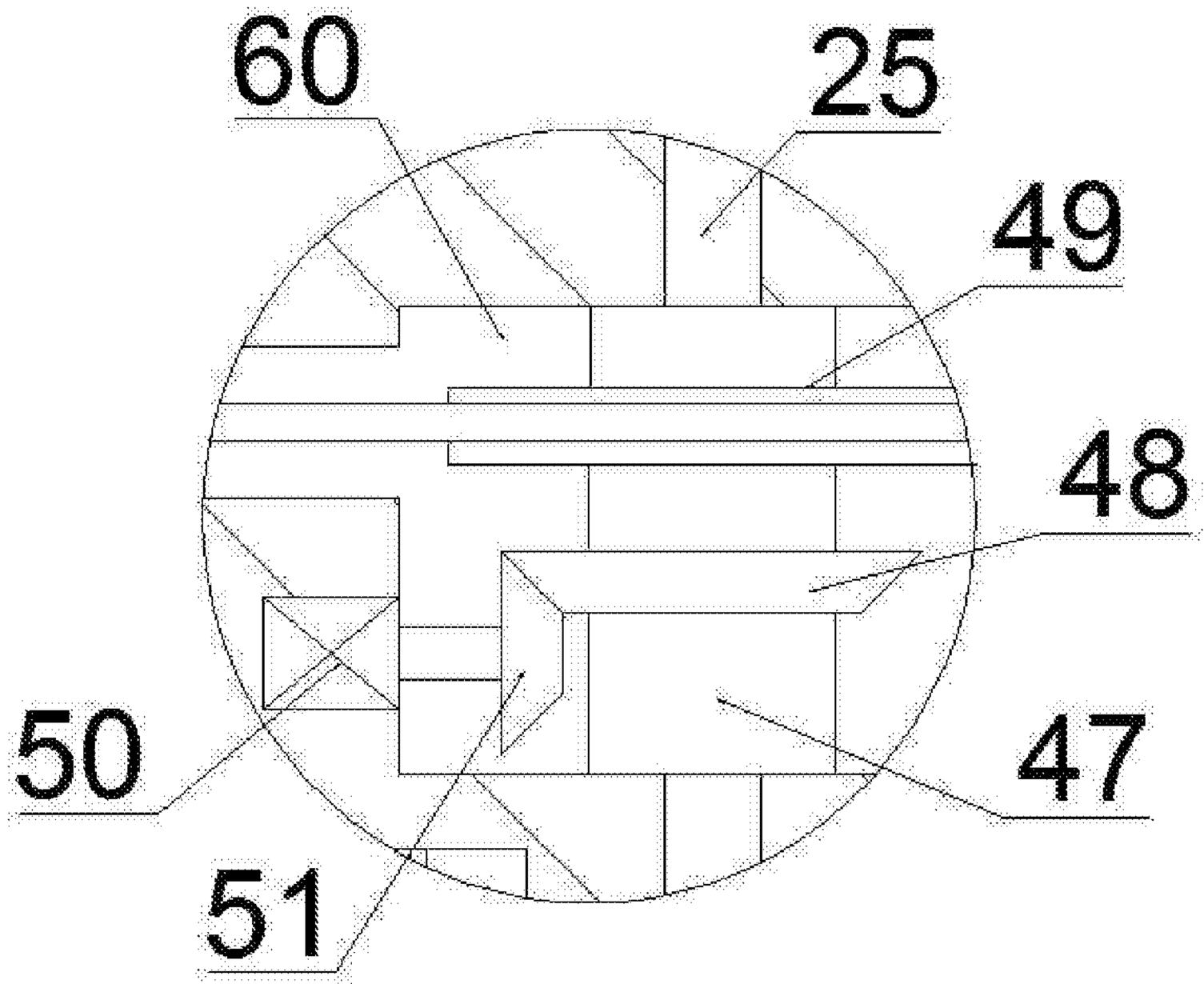

Figure 5

AN AIR PURIFICATION DEVICE

FIELD OF THE INVENTION

[0001] The present invention relates to the technical field of purifier, in particular to an air purification device.

BACKGROUND OF THE INVENTION

[0002] At present, most of purifiers on the market are open at the top, which is easy to be contacted with dust, making purified air polluted again, and the air is only able to blow in one direction. Therefore, it is necessary to design a purification device that is capable of blowing air in all directions.

SUMMARY OF THE INVENTION

[0003] The purpose of the invention is to provide an air purification device to overcome the problems existing in the prior art.

[0004] An air purification device according to an embodiment of the present invention comprises a main body; an air outlet cavity disposed on a top end surface of the main body; a venting mechanism disposed in the air outlet cavity, wherein the venting mechanism is configured to diffuse and exhaust air from the device in all directions; a middle cavity disposed in the main body at a bottom of the air outlet cavity; a belt cavity communicatedly disposed at both side end walls of the middle cavity; two of crank cavities symmetrically disposed in the main body at a bottom of the middle cavity; water cavities disposed at sides of the crank cavities; purification humidification mechanisms that are configured to humidify air disposed in the water cavities, wherein air is carried with water after passing by the purification humidification mechanisms; a power cavity that is located at the bottom of the middle cavity disposed in the main body; a power mechanism that provides power for the whole device disposed in the power cavity; air inlet cavities disposed at both sides of the power cavity in the main body; air inlet mechanisms that take in air disposed in the air inlet cavities, wherein the air inlet mechanisms are configured to take in air from an exterior.

[0005] In a further technical proposal, the power mechanism comprises a first motor fixedly

embedded in a bottom wall of the power cavity; a power shaft that extends upward in power connection with a top end of the first motor; a first bevel gear fixedly disposed on a periphery of the power shaft; a second bevel gear that is located above the first bevel gear fixedly disposed on the periphery of the power shaft; small cavities disposed at both side end walls of the power cavity; small rotating shafts rotatably disposed between the small cavities and the power cavity; third bevel gears that are meshed with the second bevel gear fixedly disposed on ends of the small rotating shafts; fourth bevel gears fixedly disposed on the other ends of the small rotating shafts.

[0006] In a further technical proposal, the air inlet mechanisms comprise grooves disposed at sides of the air inlet cavities; flappers slidably disposed in the grooves; filter screens fixedly disposed at sides of the flappers in the grooves; sliding cavities disposed at tops of the grooves in the main body; bottom threaded blocks slidably disposed in the sliding cavities, wherein the bottom threaded blocks are fixed with the flappers; screws that vertically extend rotatably disposed between the sliding cavities and the air outlet cavity, wherein bottom ends of the screws are in threaded engagement with the bottom threaded blocks; driven gears fixedly disposed on peripheries of the screws in the belt cavity.

[0007] In a further technical proposal, driven shafts are rotatably disposed between the air inlet cavities and the power cavity, and fifth bevel gears that are meshed with the first bevel gear are fixedly disposed on ends of the driven shafts, and fan blades are fixedly disposed on peripheries of the driven shafts, and air inlet pipes are communicatedly disposed between the air inlet cavities and the water cavities.

[0008] In a further technical proposal, the purification humidification mechanisms comprise pushing plates slidably disposed in the water cavities; circular holes disposed on the pushing plates; liquid water disposed in the water cavities; pushing rods fixedly disposed on ends of the pushing plates; cranks rotatably disposed in the crank cavities, wherein bottom ends of the cranks extend into the small cavities; sixth bevel gears fixedly disposed on the bottom ends of the cranks, wherein the sixth bevel gears are meshed with the fourth bevel gears; shaft sleeves rotatably disposed on peripheries of the cranks, wherein ends of the shaft sleeves are hinged with the pushing rods.

[0009] In a further technical proposal, air outlet pipes are communicatedly disposed between the air outlet cavity and the water cavities, and top one-way valves are disposed in the air outlet pipes, and bottom one-way valves fixedly disposed in the air inlet pipes.

[0010] In a further technical proposal, the venting mechanism comprises a cover plate disposed on a top of the air outlet cavity; two of top threaded blocks fixedly disposed on a bottom end of the cover plate, wherein the top threaded blocks are attached against inner walls of the air outlet cavity and slidably connected to the inner walls of the air outlet cavity, and the top threaded blocks are in threaded engagement with top ends of the screws; projections fixedly disposed at the bottom end of the cover plate.

[0011] In a further technical proposal, a fan is fixedly disposed on a top end of the power shaft, and a sleeve is rotatably disposed on the periphery of the power shaft in the middle cavity, and a power gear is fixedly disposed on a periphery of the sleeve, and diameter of the power gear is larger than that of the driven gears, and the power gear is drivingly connected with the driven gears by a belt, and a driven bevel gear is fixedly disposed on the periphery of the sleeve, and a second motor is fixedly embedded in the side end wall of the middle cavity, and a power bevel gear is connected to an end of the second motor, and the power bevel gear is meshed with the driven bevel gear.

[0012] The present invention has beneficial effect that the air purification device is able to protect the air outlet cavity from being polluted by dust by means of the cover plate, so that air exhausted maintains clean, and the air is cleaner and moister after filtered through water by means of the pushing plates, and each component of the invention has high interactivity, which saves quantity of motors.

BRIEF DESCRIPTION OF THE DRAWINGS

[0013] FIG. 1 is an overall structural diagram of the air purification device of the present invention;

[0014] FIG. 2 is a schematic structural diagram of one of the pushing plates of the present invention;

[0015] FIG. 3 is a partially enlarged structural diagram of A in FIG. 1;

[0016] FIG. 4 is a partially enlarged structural diagram of B in FIG. 1;

[0017] FIG. 5 is a partially enlarged structural diagram of C in FIG. 1.

DETAILED DESCRIPTION OF THE INVENTION

[0018] The preferred embodiments of the present invention will be described in detail in the following in combination with the drawings above. For better explanation, the orientations described hereinafter are defined as follows: directions of up, down, left, right, front and rear in the text are identical to the directions of up, down, left, right, front and rear of FIG.1.

[0019] Referring to Figures 1-5, an air purification device according to an embodiment of the present invention comprises a main body 10; an air outlet cavity 21 disposed on a top end surface of the main body 10; a venting mechanism 80 disposed in the air outlet cavity 21, wherein the venting mechanism 80 is configured to diffuse and exhaust air from the device in all directions; a middle cavity 60 disposed in the main body 10 at a bottom of the air outlet cavity 21; a belt cavity 17 communicatedly disposed at both side end walls of the middle cavity 60; two of crank cavities 41 symmetrically disposed in the main body 10 at a bottom of the middle cavity 60; water cavities 40 disposed at sides of the crank cavities 41; purification humidification mechanisms 81 that are configured to humidify air disposed in the water cavities 40, wherein air is carried with water after passing by the purification humidification mechanisms 81; a power cavity 29 that is located at the bottom of the middle cavity 60 disposed in the main body 10; a power mechanism 83 that provides power for the whole device disposed in the power cavity 29; air inlet cavities 46 disposed at both sides of the power cavity 29 in the main body 10; air inlet mechanisms 82 that take in air disposed in the air inlet cavities 46, wherein the air inlet mechanisms 82 are configured to take in air from an exterior.

[0020] The power mechanism 83 comprises a first motor 28 fixedly embedded in a bottom wall of the power cavity 29; a power shaft 25 that extends upward in power connection with a top end of the first motor 28; a first bevel gear 32 fixedly disposed on a periphery of the power shaft 25; a second bevel gear 33 that is located above the first bevel gear 32 fixedly disposed on the periphery of the power shaft 25; small cavities 37 disposed at both side end walls of the power cavity 29; small rotating shafts 35 rotatably disposed between the small cavities 37 and the power cavity 29; third bevel gears 34 that are meshed with the second bevel gear 33 fixedly disposed on ends of the small rotating shafts 35; fourth bevel gears 36 fixedly disposed on the other ends of the small rotating shafts 35; in use, the first motor 28 is controlled to operate to enable the purification humidification mechanisms 81 to operate.

[0021] The air inlet mechanisms 82 comprise grooves 11 disposed at sides of the air inlet cavities 46; flappers 12 slidably disposed in the grooves 11; filter screens 13 fixedly disposed at sides of the

flappers 12 in the grooves 11; sliding cavities 16 disposed at tops of the grooves 11 in the main body 10; bottom threaded blocks 14 slidably disposed in the sliding cavities 16, wherein the bottom threaded blocks 14 are fixed with the flappers 12; screws 15 that vertically extend rotatably disposed between the sliding cavities 16 and the air outlet cavity 21, wherein bottom ends of the screws 15 are in threaded engagement with the bottom threaded blocks 14; driven gears 18 fixedly disposed on peripheries of the screws 15 in the belt cavity 17; in use, the driven gears 18 are rotated to drive the screws 15 to rotate, and thus the bottom threaded blocks 14 are driven to slide upward, and thus the flappers 12 are driven to slide upward and opened, so that air enters the air inlet cavities 46.

[0022] Driven shafts 31 are rotatably disposed between the air inlet cavities 46 and the power cavity 29, and fifth bevel gears 30 that are meshed with the first bevel gear 32 are fixedly disposed on ends of the driven shafts 31, and fan blades 45 are fixedly disposed on peripheries of the driven shafts 31, and air inlet pipes 43 are communicatedly disposed between the air inlet cavities 46 and the water cavities 40; in use, the first motor 28 is controlled to operate to drive the power shaft 25 to rotate, and thus the fifth bevel gears 30 are driven to rotate by the first bevel gear 32, and thus the driven shafts 31 are driven to rotate, and thus air is able to be pumped into the air inlet cavities 46, so that the air enters the water cavities 40 passing by the air inlet pipes 43.

[0023] The purification humidification mechanisms 81 comprise pushing plates 42 slidably disposed in the water cavities 40; circular holes 52 disposed on the pushing plates 42; liquid water disposed in the water cavities 40; pushing rods 61 fixedly disposed on ends of the pushing plates 42; cranks 63 rotatably disposed in the crank cavities 41, wherein bottom ends of the cranks 63 extend into the small cavities 37; sixth bevel gears 38 fixedly disposed on the bottom ends of the cranks 63, wherein the sixth bevel gears 38 are meshed with the fourth bevel gears 36; shaft sleeves 62 rotatably disposed on peripheries of the cranks 63, wherein ends of the shaft sleeves 62 are hinged with the pushing rods 61; in use, the cranks 63 are driven to rotate by the small rotating shafts 35 through rotation of the second bevel gear 33, and thus the pushing plates 42 are driven to perform reciprocating motion, and air and water in the water cavities 40 are mixed and then enter the air outlet cavity 21.

[0024] Air outlet pipes 26 are communicatedly disposed between the air outlet cavity 21 and the water cavities 40, and top one-way valves 27 are disposed in the air outlet pipes 26, and bottom one-way valves 44 fixedly disposed in the air inlet pipes 43; in use, the top one-way valves 27 and

the bottom one-way valves 44 enable air only to move from bottom to top, and the air is unable to be pumped into the water cavities 40.

[0025] The venting mechanism 80 comprises a cover plate 22 disposed on a top of the air outlet cavity 21; two of top threaded blocks 20 fixedly disposed on a bottom end of the cover plate 22, wherein the top threaded blocks 20 are attached against inner walls of the air outlet cavity 21 and slidably connected to the inner walls of the air outlet cavity 21, and the top threaded blocks 20 are in threaded engagement with top ends of the screws 15; projections 23 fixedly disposed at the bottom end of the cover plate 22; in use, air is able to be dispersed and blown in all directions when passing through the projections 23.

[0026] A fan 24 is fixedly disposed on a top end of the power shaft 25, and a sleeve 47 is rotatably disposed on the periphery of the power shaft 25 in the middle cavity 60, and a power gear 49 is fixedly disposed on a periphery of the sleeve 47, and diameter of the power gear 49 is larger than that of the driven gears 18, and the power gear 49 is drivingly connected with the driven gears 18 by a belt 19, and a driven bevel gear 48 is fixedly disposed on the periphery of the sleeve 47, and a second motor 50 is fixedly embedded in the side end wall of the middle cavity 60, and a power bevel gear 51 is connected to an end of the second motor 50, and the power bevel gear 51 is meshed with the driven bevel gear 48; in use, the second motor 50 is controlled to operate to enable the power bevel gear 51 to drive the driven bevel gear 48 to rotate, and thus the sleeve 47 is driven to rotate, and thus the screws 15 are driven to rotate by the driven gears 18, and thus the top threaded blocks 20 are driven to move upward, and thus the cover plate 22 is driven to move upward, and the top of the air outlet cavity 21 is in an open state, at the same time, the bottom threaded blocks 14 move upward, and thus the flappers 12 are driven to move upward to enable the grooves 11 to be in an open state, so that air is able to enter the air inlet cavities 46, and the power shaft 25 is rotated to drive the fan 24 to rotate, so that the air is blew out.

[0027] When in use, the second motor 50 is controlled to operate to enable the power bevel gear 51 to drive the driven bevel gear 48 to rotate, and thus the sleeve 47 is driven to rotate, and thus the screws 15 are driven to rotate by the driven gears 18, and thus the top threaded blocks 20 are driven to move upward, and thus the cover plate 22 is driven to move upward, and the top of the air outlet cavity 21 is in an open state, at the same time, the bottom threaded blocks 14 move upward, and thus the flappers 12 are driven to move upward to enable the grooves 11 to be in an open state, so that air is able to enter the air inlet cavities 46; at this time, the first motor 28 is controlled to operate

to drive the power shaft 25 to rotate, and thus the fifth bevel gears 30 are driven to rotate by the first bevel gear 32, and thus the driven shafts 31 are driven to rotate, and thus air is able to be pumped into the air inlet cavities 46, so that the air enters the water cavities 40 passing by the air inlet pipes 43; at the same time, the third bevel gears 34 are driven to rotate by the second bevel gear 33, and thus the small rotating shafts 35 are driven to drive the fourth bevel gears 36 to rotate, and thus the sixth bevel gears 38 are driven to rotate, and thus the cranks 63 are driven to drive the pushing plates 42 to perform reciprocating motion, and the air and water are mixed, and filtering and purifying are performed, and the air enters the air outlet cavity 21 through the air outlet pipes 26, at this time, the power shaft 25 is rotated to drive the fan 24 to rotate, so that the air is blew out.

[0028] The present invention has beneficial effect that the air purification device is able to protect the air outlet cavity from being polluted by dust by means of the cover plate, so that air exhausted maintains clean, and the air is cleaner and moister after filtered through water by means of the pushing plates, and each component of the invention has high interactivity, which saves quantity of motors.

[0029] Persons skilled in the art should understand that, the invention will be subject to modification and improvement based on its intention and extent, which will also fall into the claimed protection extent of this invention. The claimed protection extent of the invention shall be determined with reference to the appended claims.

CLAIMS

1. An air purification device, comprising:

a main body;

an air outlet cavity disposed on a top end surface of the main body;

a venting mechanism disposed in the air outlet cavity, wherein the venting mechanism is configured to diffuse and exhaust air from the device in all directions;

a middle cavity disposed in the main body at a bottom of the air outlet cavity;

a belt cavity communicatedly disposed at both side end walls of the middle cavity;

two of crank cavities symmetrically disposed in the main body at a bottom of the middle cavity;

water cavities disposed at sides of the crank cavities;

purification humidification mechanisms that are configured to humidify air disposed in the water cavities, wherein air is carried with water after passing by the purification humidification mechanisms;

a power cavity that is located at the bottom of the middle cavity disposed in the main body;

a power mechanism that provides power for the whole device disposed in the power cavity;

air inlet cavities disposed at both sides of the power cavity in the main body;

air inlet mechanisms that take in air disposed in the air inlet cavities, wherein the air inlet mechanisms are configured to take in air from an exterior.

2. The air purification device as defined in claim 1, wherein the power mechanism comprises a first motor fixedly embedded in a bottom wall of the power cavity;

a power shaft that extends upward in power connection with a top end of the first motor;

a first bevel gear fixedly disposed on a periphery of the power shaft;

a second bevel gear that is located above the first bevel gear fixedly disposed on the periphery of the power shaft;

small cavities disposed at both side end walls of the power cavity;

small rotating shafts rotatably disposed between the small cavities and the power cavity;

third bevel gears that are meshed with the second bevel gear fixedly disposed on ends of the small rotating shafts;

fourth bevel gears fixedly disposed on the other ends of the small rotating shafts.

3. The air purification device as defined in claim 1, wherein the air inlet mechanisms comprise grooves disposed at sides of the air inlet cavities;

flappers slidably disposed in the grooves;

filter screens fixedly disposed at sides of the flappers in the grooves;

sliding cavities disposed at tops of the grooves in the main body;

bottom threaded blocks slidably disposed in the sliding cavities, wherein the bottom threaded blocks are fixed with the flappers;

screws that vertically extend rotatably disposed between the sliding cavities and the air outlet cavity, wherein bottom ends of the screws are in threaded engagement with the bottom threaded blocks;

driven gears fixedly disposed on peripheries of the screws in the belt cavity.

4. The air purification device as defined in claim 1, wherein driven shafts are rotatably disposed between the air inlet cavities and the power cavity,

and fifth bevel gears that are meshed with the first bevel gear are fixedly disposed on ends of the driven shafts,

and fan blades are fixedly disposed on peripheries of the driven shafts,

and air inlet pipes are communicatedly disposed between the air inlet cavities and the water cavities.

5. The air purification device as defined in claim 1, wherein the purification humidification mechanisms comprise pushing plates slidably disposed in the water cavities;

circular holes disposed on the pushing plates;

liquid water disposed in the water cavities;

pushing rods fixedly disposed on ends of the pushing plates;

cranks rotatably disposed in the crank cavities, wherein bottom ends of the cranks extend into the small cavities;

sixth bevel gears fixedly disposed on the bottom ends of the cranks, wherein the sixth bevel gears are meshed with the fourth bevel gears;

shaft sleeves rotatably disposed on peripheries of the cranks, wherein ends of the shaft sleeves are hinged with the pushing rods.

6. The air purification device as defined in claim 1, wherein air outlet pipes are communicatedly disposed between the air outlet cavity and the water cavities,

and top one-way valves are disposed in the air outlet pipes,

and bottom one-way valves fixedly disposed in the air inlet pipes.

7. The air purification device as defined in claim 1, wherein the venting mechanism comprises a cover plate disposed on a top of the air outlet cavity;

two of top threaded blocks fixedly disposed on a bottom end of the cover plate, wherein the top threaded blocks are attached against inner walls of the air outlet cavity and slidably connected to the inner walls of the air outlet cavity,
and the top threaded blocks are in threaded engagement with top ends of the screws;
projections fixedly disposed at the bottom end of the cover plate.

8. The air purification device as defined in claim 2, wherein a fan is fixedly disposed on a top end of the power shaft,
and a sleeve is rotatably disposed on the periphery of the power shaft in the middle cavity,
and a power gear is fixedly disposed on a periphery of the sleeve, and diameter of the power gear is larger than that of the driven gears,
and the power gear is drivingly connected with the driven gears by a belt,
and a driven bevel gear is fixedly disposed on the periphery of the sleeve,
and a second motor is fixedly embedded in the side end wall of the middle cavity,
and a power bevel gear is connected to an end of the second motor, and the power bevel gear is meshed with the driven bevel gear.

CLAIMS

1. An air purification device, comprising:

a main body;

an air outlet cavity disposed on a top end surface of the main body;

a venting mechanism disposed in the air outlet cavity,

a middle cavity disposed in the main body in a bottom of the air outlet cavity;

a belt cavity communicatedly disposed at both side end walls of the middle cavity;

two of crank cavities symmetrically disposed in the main body at a bottom of the middle cavity; water cavities disposed at sides of the crank cavities;

purification humidification mechanisms that are configured to humidify air disposed in the water cavities, wherein air is carried with water after passing by the purification humidification mechanisms;

a power cavity that is located in the bottom of the middle cavity disposed in the main body;

a power mechanism that provides power and parts for the whole device disposed in the power cavity

air inlet cavities disposed at both sides of the power cavity in the main body;

air inlet mechanisms that take in air disposed in the air inlet cavities, wherein the air inlet mechanisms are configured to take in air from an exterior;

wherein the power mechanism comprises a first motor fixedly embedded in a bottom wall of the power cavity;

a power shaft that extends upward in power connection with a top end of the first motor;

a first bevel gear fixedly disposed on a periphery of the power shaft;

a second bevel gear that is located above the first bevel gear fixedly disposed on the periphery of the power shaft;

small cavities disposed at both side end walls of the power cavity;

small rotating shafts rotatably disposed between the small cavities and the power cavity;

third bevel gears that are meshed with the second bevel gear fixedly disposed on ends of the small rotating shafts;

fourth bevel gears fixedly disposed on the other ends of the small rotating shafts;

wherein the air inlet mechanisms comprise grooves disposed at sides of the air inlet cavities;

flappers slidably disposed in the grooves;

filter screens fixedly disposed at sides of the flappers in the grooves;

sliding cavities disposed at tops of the grooves in the main body;

02 1 20

bottom threaded blocks slidably disposed in the sliding cavities, wherein the bottom threaded blocks are fixed with the flappers;
screws that vertically extend rotatably disposed between the sliding cavities and the air outlet cavity, wherein bottom ends of the screws are in threaded engagement with the bottom threaded blocks; driven gears fixedly disposed on peripheries of the screws in the belt cavity;

wherein driven shafts are rotatably disposed between the air inlet cavities and the power cavity, and fifth bevel gears that are meshed with the first bevel gear are fixedly disposed on ends of the driven shafts,
and fan blades are fixedly disposed on peripheries of the driven shafts,
and air inlet pipes are communicatedly disposed between the air inlet cavities and the water cavities.

2. The air purification device as defined in claim 1, wherein the purification humidification mechanisms comprise pushing plates slidably disposed in the water cavities;
circular holes disposed on the pushing plates;
liquid water disposed in the water cavities;
pushing rods fixedly disposed on ends of the pushing plates;
cranks rotatably disposed in the crank cavities, wherein bottom ends of the cranks extend into the small cavities;
sixth bevel gears fixedly disposed on the bottom ends of the cranks, wherein the sixth bevel gears are meshed with the fourth bevel gears;
shaft sleeves rotatably disposed on peripheries of the cranks, wherein ends of the shaft sleeves are hinged with the pushing rods.

3. The air purification device as defined in claim 1, wherein air outlet pipes are communicatedly disposed between the air outlet cavity and the water cavities,
and top one-way valves are disposed in the air outlet pipes, and bottom one-way valves fixedly disposed in the air inlet pipes.

4. The air purification device as defined in claim 1, wherein the venting mechanism comprises a cover plate disposed on a top of the air outlet cavity;

two of top threaded blocks fixedly disposed on a bottom end of the cover plate, wherein the top threaded blocks are attached against inner walls of the air outlet cavity and slidably connected to the inner walls of the air outlet cavity,

20 02 11

and the top threaded blocks are in threaded engagement with top ends of the screws; projections fixedly disposed at the bottom end of the cover plate.

5. The air purification device as defined in claim 2, wherein a fan is fixedly disposed on a top end of the power shaft,
and a sleeve is rotatably disposed on the periphery of the power shaft in the middle cavity,
and a power gear is fixedly disposed on a periphery of the sleeve, and diameter of the power gear is larger than that of the driven gears,
and the power gear is drivingly connected with the driven gears by a belt,
and a driven bevel gear is fixedly disposed on the periphery of the sleeve,
and a second motor is fixedly embedded in the side end wall of the middle cavity,
and a power bevel gear is connected to an end of the second motor, and the power bevel gear is meshed with the driven bevel gear.

20 02 11

Intellectual Property Office

Application No:	GB1907316.2	**Examiner:**	Ms Janet Kohler
Claims searched:	1-8	**Date of search:**	12 July 2019

Patents Act 1977: Search Report under Section 17

Documents considered to be relevant:

Category	Relevant to claims	Identity of document and passage or figure of particular relevance
A	-	CN 204494635 U (DIQIUCUN TONGYI TECHNOLOGY SHENZHEN CO LTD) See figures and EPO English translation.
A	-	CN 109363582 A (SHAOXING SHANGYU YONGJIN ENVIRONMENTAL PROTECTION TECH CO LTD) See figure 1 and EPO English translation.
A	-	CN 108980994 A (NINGBO YINZHOU YIWANG ELECTRONIC TECH CO LTD) See figures 1 & 3 and EPO English translation.
A	-	CN 203848439 U (JIN CHIPING ET AL.) See figure 1 and EPO English translation.
A	-	CN 201691852 U (YICHANG DAI) See figure 1 and EPO English translation.
A	-	EP 2842641 A (SUMITOMO CHEMICAL CO) See figures 1-7 and paragraphs [0066]-[0072].

Categories:

X	Document indicating lack of novelty or inventive step	A	Document indicating technological background and/or state of the art.
Y	Document indicating lack of inventive step if combined with one or more other documents of same category.	P	Document published on or after the declared priority date but before the filing date of this invention.
&	Member of the same patent family	E	Patent document published on or after, but with priority date earlier than, the filing date of this application.

Field of Search:

Search of GB, EP, WO & US patent documents classified in the following areas of the UKC^{X} :

Worldwide search of patent documents classified in the following areas of the IPC

F24F

The following online and other databases have been used in the preparation of this search report

EPODOC, WPI, Patent Fulltext

Intellectual Property Office

International Classification:

Subclass	Subgroup	Valid From
F24F	0003/14	01/01/2006
F24F	0003/16	01/01/2006
F24F	0006/00	01/01/2006