W. COREY

SAFETY FOOT ACCELERATOR.

APPLICATION FILED MAY 10, 1918.

1,287,890. Patented Dec. 17, 1918.

Fig. 1

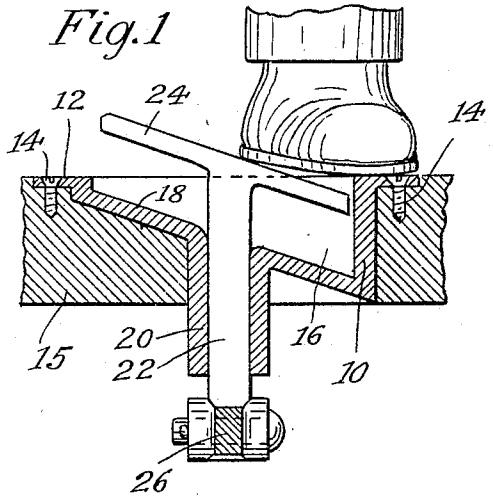

Fig. 2

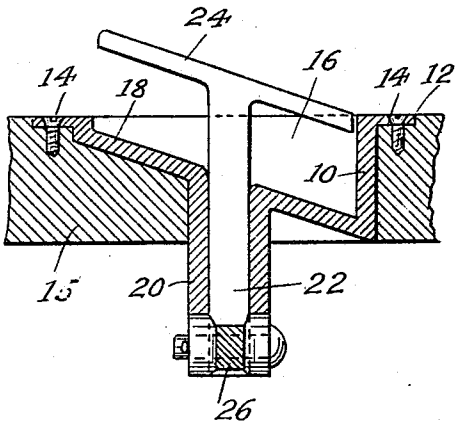

Fig. 5

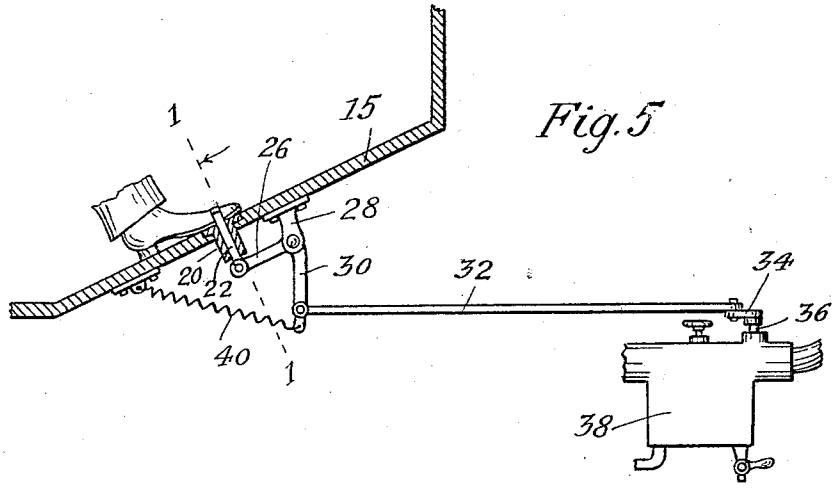

Fig. 3

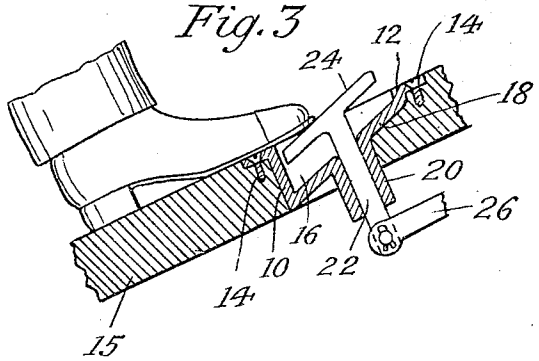

Fig. 4

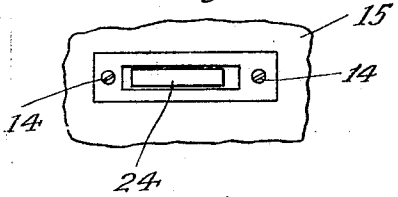

Inventor.
Walter Corey.
By Whiteley and Huckman
his Attorneys.

UNITED STATES PATENT OFFICE.

WALTER COREY, OF MINNEAPOLIS, MINNESOTA.

SAFETY FOOT-ACCELERATOR.

1,287,890. Specification of Letters Patent. Patented Dec. 17, 1918.

Application filed May 10, 1918. Serial No. 233,772.

To all whom it may concern:

Be it known that I, WALTER COREY, a citizen of the United States, residing at Minneapolis, in the county of Hennepin and State of Minnesota, have invented certain new and useful Improvements in Safety Foot-Accelerators, of which the following is a specification.

My invention relates to safety foot accelerators and the object is to provide a foot-operated device for controlling the accelerator of automobiles, the device being adapted for operation in such manner that the customary strain on the leg and foot of the driver is eliminated. A further object is to provide a device which will add to the safety of the occupants of automobiles by rendering accidental acceleration unlikely, especially when the car is moving over uneven surfaces. A further object is to provide a device of this character which is simple in construction and which may be quickly installed in proper position on automobiles.

The full objects and advantages of my invention will appear in connection with the detailed description thereof and are particularly pointed out in the claims.

In the drawings, which illustrate the application of my invention in one form,—

Figure 1 is a view mostly in section on the line 1—1 of Fig. 5 showing my device partly depressed by the foot of the driver. Fig. 2 is a view similar to Fig. 1 but showing the position assumed by the device when it is not depressed by the foot of the driver. Fig. 3 is a view showing the device applied to the foot-board in a position at right angles to that shown in Figs. 1 and 2. Fig. 4 is a top plan view. Fig. 5 is a view showing the connections with the throttle.

In the drawings 10 designates a casing having a flange 12 through which extend screws 14 for securing the casing in a suitable recess in the foot-board 15 of an automobile. The casing is provided with a slot 16 having an inclined bottom 18 provided with an opening which registers with the opening in a hollow lug 20 depending from the bottom. A stem 22 is positioned for vertical sliding movement in the hollow lug 20, and a foot member 24 is mounted on the upper end of the stem at the same inclination as that of the bottom 18. The lower end of the stem 22 is pivotally connected to an arm 26 of a bell-crank lever pivoted to a bracket 28 secured to the under side of the foot-board. The other arm 30 of the bell-crank is pivotally connected to one end of a connecting rod 32 the other end of which is pivoted to a crank arm 34 secured to the upper end of a valve stem 36 of the valve which controls the carbureter 38. The tension spring 40 secured at one end to the arm 30 and at the other end secured to the foot-board serves to exert backward thrust on the rod 32 to close the throttle and also to lift the foot member into the position shown in Fig. 2. It will be observed that in this position one end of the foot member 24 comes flush with the foot-board and the other end is elevated above the foot-board. The foot member constitutes an inclined plane with relation to the foot-board, and the driver by sliding his foot along this inclined plane may easily and quickly obtain the desired degree of acceleration. This is accomplished without lifting the foot which may always remain in contact with the foot-board. The foot member is readily depressed by an easy sliding movement of the foot which requires no appreciable effort. As shown in Figs. 1, 2 and 5, the device is arranged for operation by sliding the sole of the shoe sideways over the foot member. It is obvious that the driver might use his heel for this purpose if he so desires. In Fig. 3 the device is shown arranged for operation by forward sliding movement of the foot of the operator. The device may be readily installed on automobiles for operating in either position as desired.

The operation and advantages of my invention will be readily understood from the foregoing description. It does away with all jerking and racing of the engine when the car is running over rough roads, thereby saving the engine, the transmission, the tires, etc., and adds to the comfort and safety by relieving the strain on the driver and allowing him to drive to the best advantage, since he is not forced to concentrate his mind on holding the speed even. The installation of the device does not detract from the appearance of the foot-board of the car, and it is obvious that the device can be used in the same way as the customary form of accelerator control if necessary or desired. The device is simple in construction and easily installed both in new and old cars. Strain on the muscles of the foot and leg of the driver is eliminated, thereby adding to the comfort and safety in driving. While

my foot-operated device is intended particularly for operating accelerators of automobiles, it is obvious that it may be used for operating other parts.

On account of the manner in which the foot member is mounted with relation to the foot board, the pressure required to depress successive portions of the inclined plane to the level of the foot board remains substantially the same for the entire length of the inclined plane.

I claim:

1. An accelerator comprising a foot member, the upper surface of which is adapted to normally form an inclined plane with relation to the foot board of an automobile, means for supporting said foot member for sliding movement with relation to said foot board whereby successive portions of said inclined plane may be depressed to the level of said foot board by pressure which remains substantially the same for the entire length of the inclined plane, and connections between said foot member and the throttle.

2. An accelerator comprising a foot member the upper surface of which is adapted to normally form an inclined plane with relation to the foot board of an automobile, a stem attached to said foot member, said stem being supported for sliding movement in said foot board whereby successive portions of said inclined plane may be depressed to the level of said foot board, and connections between said stem and the throttle.

3. A foot-operated device comprising a casing having an inclined bottom which together with the walls of the casing form an inclined slot, said bottom having an opening, a hollow lug positioned below said opening, an inclined foot member adapted to slide in said slot, and a stem attached to said foot member and adapted to slide in said hollow lug.

4. A foot-operated device comprising a casing having an inclined bottom which together with the walls of the casing form an inclined slot, said bottom having an opening, a hollow lug attached to said bottom below said opening, a foot member having an inclination corresponding to the inclination of said bottom and adapted to slide in said slot, a stem attached to said foot member and adapted to slide in said hollow lug, a bell-crank lever having one of its arms pivotally connected to said stem, an operating rod pivotally connected to the other arm of said lever, and a spring normally holding said rod retracted and said foot member elevated.

5. An accelerator comprising a foot member adapted to form an inclined plane with relation to the foot-board of an automobile, a stem attached to said foot member, a bell-crank lever pivoted to the foot-board and having one of its arms pivotally connected to said stem, an operating rod pivotally connected at one end to the other arm of said lever and having its other end pivotally connected to a throttle arm, and a tension spring attached at one end to the second-named arm of said lever and at its other end attached to the foot-board.

In testimony whereof I hereunto affix my signature.

WALTER COREY.