United States Patent [19]

Kaelin et al.

[11] **3,732,389**

[45] **May 8, 1973**

[54] **TOUCH ENTRY SWITCH ARRAY**

[75] Inventors: **George R. Kaelin; David M. Piatt,** both of Woodland Hills, Calif.

[73] Assignee: **Litton Systems, Inc.,** Beverly Hills, Calif.

[22] Filed: **Feb. 14, 1972**

[21] Appl. No.: **225,826**

[52] **U.S. Cl.** .....**200/167 A,** 200/1 R, 200/5 A, 200/159 B, 340/365 A

[51] **Int. Cl.** **H01h 9/16**

[58] **Field of Search** .....200/167 R, 167 A, 200/DIG. 1, 159 B; 340/365 C, 365 R, 365 A; 200/1 R, 5 A, 5 R

[56] **References Cited**

UNITED STATES PATENTS

3,290,439	12/1966	Willcox et al.	200/5 A X
3,591,749	7/1971	Comstock	200/167 R

Primary Examiner—Robert K. Schaefer
Assistant Examiner—William J. Smith
Attorney—Robert M. Angus et al.

[57] **ABSTRACT**

A touch entry switch array comprising a layer of non-conductive material is sandwiched between two conductive layers. Orthogonally disposed conductors are arranged in a matrix and adapted to make electrical connection by deforming an upper resilient, transparent or translucent layer through respective apertures to establish electrical contact. Indicator means is provided to indicate through the apertures the actuation of the associated switch. In one form of the device, the orthogonal conductors are supported on the lower layer and the upper layer is constructed of transparent or translucent conductive material which may be deformed through the apertures to operate the associated switch. In another form of the invention, one set of conductors is supported on the upper layer to be deformed through the apertures to contact conductors on the lower layer.

6 Claims, 5 Drawing Figures

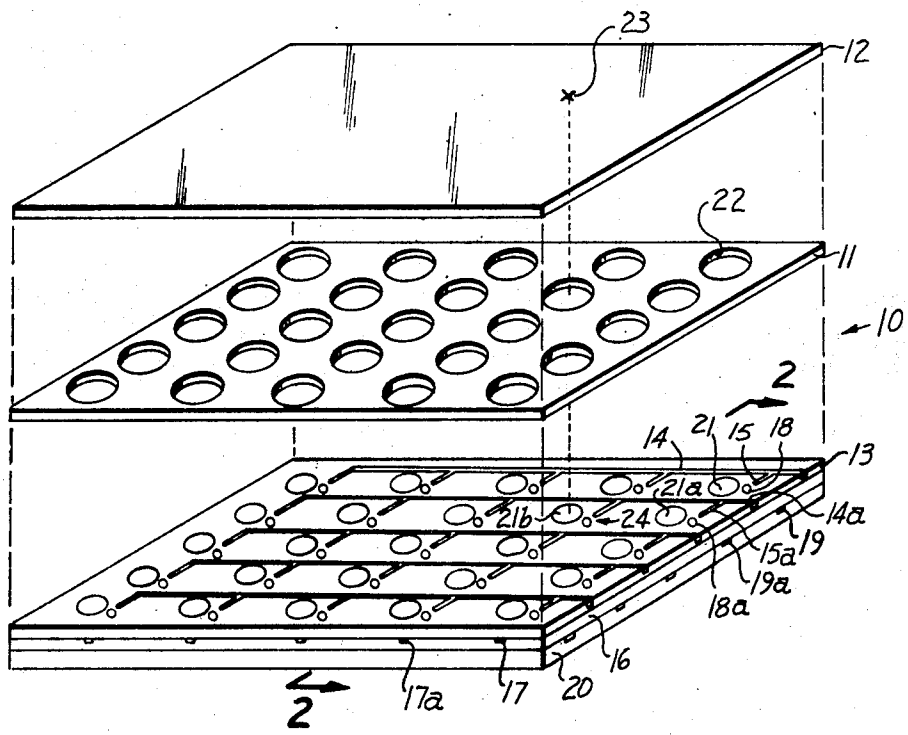

FIG. 1

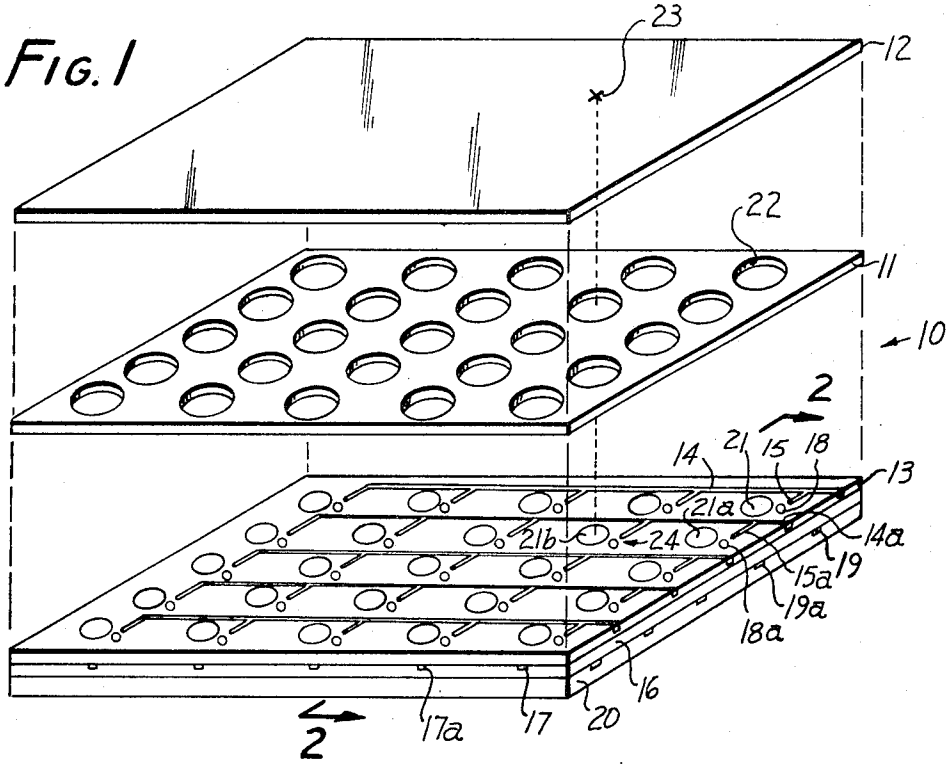

FIG. 2

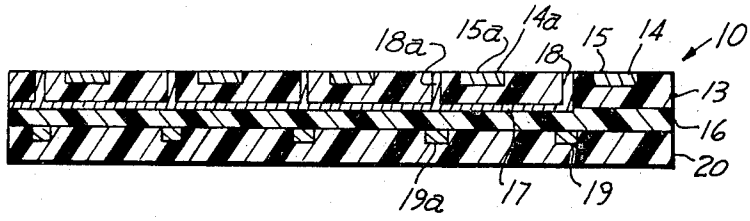

FIG. 3

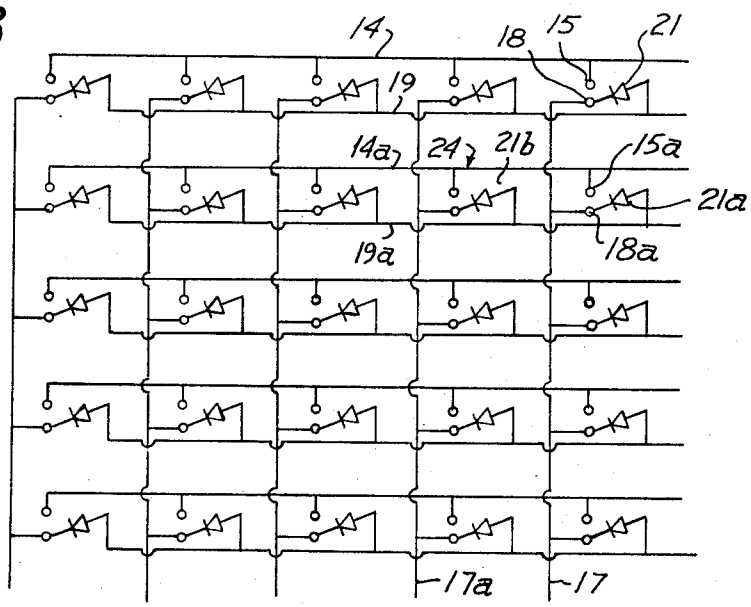

FIG. 4

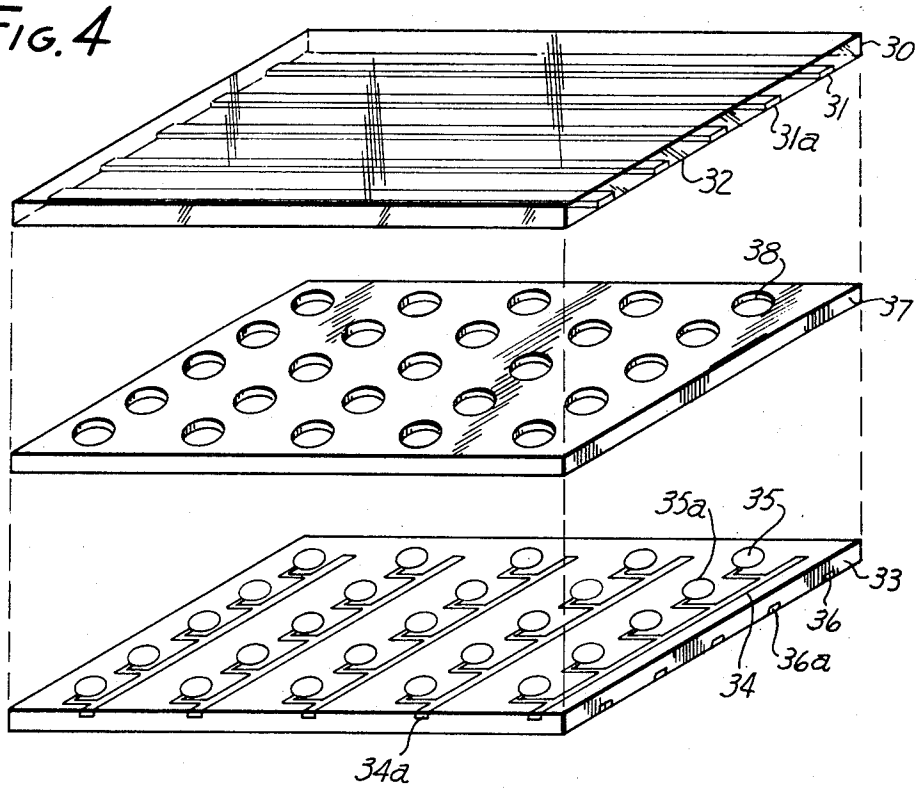

FIG. 5

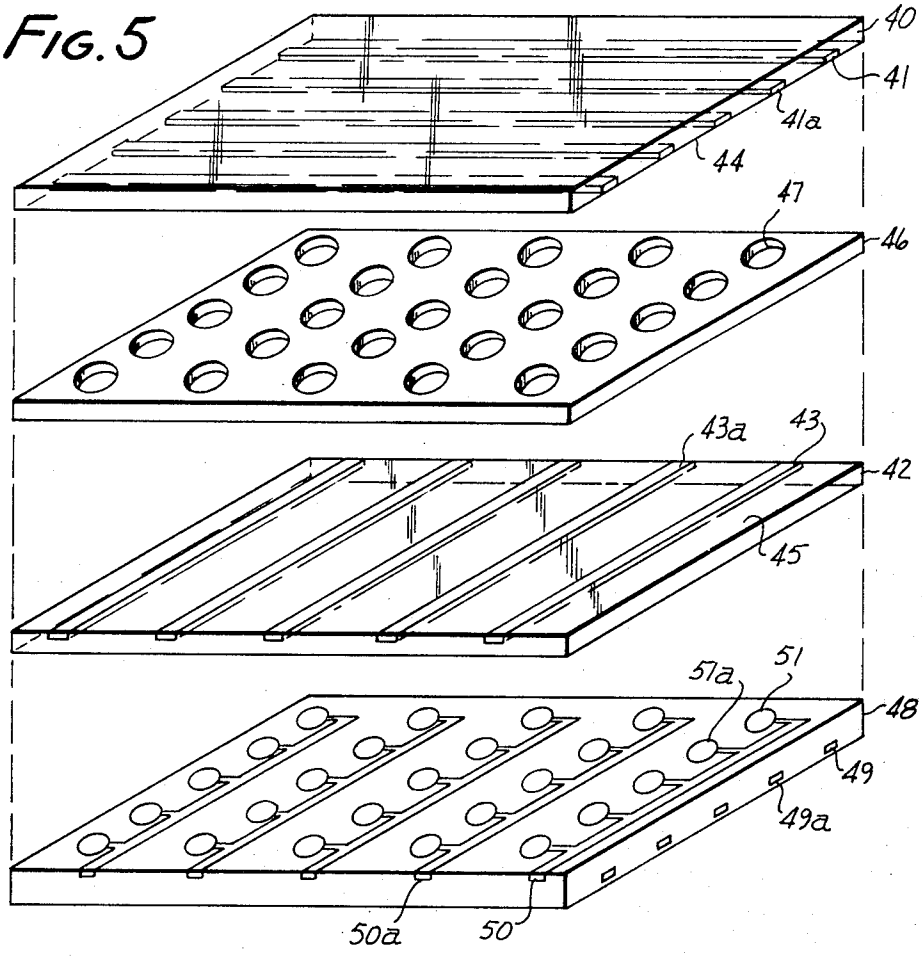

TOUCH ENTRY SWITCH ARRAY

This invention relates to touch entry switch devices, and particularly to an array of touch entry switch devices having light emitting indicators associating with each switch to indicate actuation of the switch.

Message entry devices for establishing a coded message for transmission to a central station ordinarily include an array of switches adapted to be actuated to operate on logic circuitry to formulate a predetermined message. Heretofore, such message entry devices have utilized ordinary switch devices having switch actuating means adapted to be operated by the operator. As an example of such switch actuators, the message entry devices utilized keys associated with each switch adapted to be depressed to close contacts associated with the switch for operation on the logic circuitry.

Message entry devices may be used in the field so that a forward observer can, by formulation of a proper message, advise an artillery commander of corrections to be made for a particular target. Message entry devices have become more complex due to the requirement for additional types of messages to be sent to the field commander. Hence, there has been a growing need for a more compact, portable message entry device for use by a forward observer. With the growing need for a compact message device, a corol-lary need has been established for a miniature switch array capable of actuating the logic circuitry associated with the message entry of actuating the logic circuitry associated with the message entry device.

It is an object of the present invention to provide a compact thin switch array arrangement for operation with a message entry logic circuit for establishing messages to be sent to a central computer.

Another object of the present invention is to provide a touch entry membrane switch array for use with logic circuitry for establishing messages to be sent to a remote station.

Another object of the present invention is to provide a touch entry membrane switch array having light emitting indicators associating with each switch thereof so that the operator can determin which of the switches has been operated.

In accordance with the present invention, a touch entry switch array comprises a layer having a plurality of apertures sandwiched between two other layers. A plurality of first conductors are disposed on one or the other layers. Means is provided for establishing electrical connection between selected ones of said first and second conductors by depressing said one layer through the aperture. For example, the first and second pluralities of conductors may be disposed on one layer, and the other layer, which may be constructed of resilient conductive material, may be deformed through the aperture to contact two of the conductors. Alternatively, the conductors may be disposed on opposite layers and contacted through the apertures.

In accordance with one feature of the present invention, light emitting indicators are associating with the individual switches and are operable to indicate the region of the switch array has been operated.

In accordance with another feature of the present invention, the entire membrane switch array is transparent or translucent so that light emitting indicators associated with various regions of the array may be viewed by an operator through the switch array.

The above and other features of this invention will be more fully understood from the following detailed description, and the accompanying drawings, in which:

FIG. 1 is a perspective assembly view of a membrane switch array in accordance with the presently preferred embodiment of the present invention;

FIG. 2 is a section view of a portion of the switch array illustrated in FIG. 1 taken at line 2—2 in FIG. 1;

FIG. 3 is a schematic circuit diagram of the switch array illustrated in FIG. 1;

FIG. 4 is a perspective assembly view of a membrane switch array in accordance with a modification of the present invention; and

FIG. 5 is a perspective assembly view of a switch array in accordance with another modification of the present invention.

Referring to the drawings, and particularly to FIGS. 1 and 2, there is illustrated a touch entry membrane switch array **10** in accordance with the presently preferred embodiment of the present invention. Switch array **10** comprises a thin layer of non-conductive material **11** sandwiched between a layer **12** of translucent conductive material and a layer **13**. Layer **13**, which may, for example, be constructed of a suitable insulative material, has conductors **14**, **14*a***, etc. embedded therein and exposed to the upper surface thereof. Each conductor **14** terminates at an edge of layer **13**. Each conductor **14**, **14*a*** includes a plurality of integral fingers **15**, **15*a*** extending orthogonal to the respective conductor. Insulator layer **16** is bonded to the lower surface of layer **15** and supports a plurality of conductors **17**, **17*a*** having pins **18**, **18*a*** protruding through layer **13** in spaced relation to respective finger **15**, **15*a*** of conductor **14**, **14*a***. A plurality of third conductors **19**, **19*a*** are supported by layer **20** which, in turn, is bonded to the side of layer **16** opposite layer **13**. Light emitting diodes **21**, **21*a*** are connected in a matrix between individual and mutually exclusive conductors **19** and **17**.

As illustrated in particular in the circuit diagram shown in FIG. 3, the light emitting diodes are connected in a matrix between mutually exclusive individual conductors **17** and **19**, and switch terminals are provided between fingers **15** and pins **18**. As will be more fully understood hereinafter, electrical connection between the terminals of each switch is accomplished by metallic layer **12**.

Insulating layer **11**, which is sandwiched between layers **13** and **12**, includes a plurality of apertures **22** each juxtapositioned over a respective pair of contacts **15** and **18**.

In operation of the matrix switch illustrated in FIGS. 1–3, the operator may apply pressure to a region of flexible conductive translucent membrane **12** to deform the membrane so that membrane **12** makes electrical contact between the respective terminals **15** and **18** immediately adjacent the region. For example, if the operator applies pressure to depress region **23** of layer **12**, that region of layer **12** will make electrical contact between the terminals associated with switch **24**. Hence, electrical contact will be made between conductors **14*a*** and **17*a*** thereby operating suitable logic circuitry (not shown) in accordance with a predetermined program established for the operated switch. The circuitry may respond to the actuation of switch **24** by providing an electrical signal between

conductors **17***a* and **19***a* thereby energizing light emitting diode **21***b* adjacent switch **24**. Light emitting diode **21***b* may be viewed by the operator through the respective aperture and membrane **12**.

FIG. **4** illustrates a modification of the membrane switch array in accordance with the present invention. In FIG. **4** a translucent non-conductive membrane **30** is provided having conductors **31**, **31***a* exposed to the lower surface **32** thereof. A second membrane **33** is provided with conductors **34**, **34***a* exposed to the upper surface thereof and positioned orthogonal to conductors **31**. Light emitting diodes **35**, **35***a* are connected to individual conductors **34** and **36**, **36***a* supported by layer **33** and insulated from conductor **34**. Insulator layer **37** is sandwiched between layer **30** and in diodes apertures **38** positioned at the junctions between conductors **34** and **31**.

When the layers are assembled together, the switch array may be operated by applying pressure to membrane **30** at the region of a junction between orthogonal conductors **31** and **34** to deform membrane **30** so a respective conductor **31** makes electrical contact with a respective one of conductors **34**. Electrical connection between selected conductors **31** and **34** provides information to logic circuitry (not shown) to formulate a message for transmission to a remote station. Also, a signal may be applied between respective ones of conductors **34** and **36** to energize the light emitting diode **35** associated with, and adjacent to contacted conductors. The light emitting diode may be viewed by the operator through aperture **38** and translucent membrane **30**.

FIG. **5** illustrates yet another modification of the present invention wherein a translucent non-conductive membrane **40** contains a plurality of conductors **41**, **41***a*, etc., exposed to the lower surface of the membrane. Membrane **42**, which is also translucent, includes a plurality of conductors **43**, **43**a exposed to the upper surface thereof. Membrane **46** is sandwiched between membranes **40** and **42** and includes a plurality of apertures **47** disposed at the intersection of the orthogonal conductors **41** and **43**. Non-conductive layer **48** is bonded to the lower surface of membrane **42** and includes orthogonal conductors **49**, **49***a* and **50**, **50***a*. Light emitting diodes **51**, **51***a* are connected to mutually exclusive pairs of connectors **49** and **50** in a matrix as heretofore described.

In operation of the membrane switch array according to the present invention, pressure may be applied to a region of uppermost membrane to establish electrical connection between a unique pair of conductors connected to logic circuitry. The logic circuitry may provide a signal to energize a light emitting diode associated with the particular region of the matrix switch array that is depressed. The light emitting diode may be viewed through the translucent or transparent membranes and the aperture in the non-conductive membrane sandwiched between the switch operator and the terminals. If desired, the intermediate membrane having the apertures may be opaque so that light from a light emitting diode will not be diffused into an adjacent region.

Each layer of the switch array may have a thickness of between 0.5 and 10.0 mils. In the embodiment illustrated in FIGS. **1** and **2**, layer **12** may be constructed of translucent plastic coated with a thin film of gold or tin oxide, while layers **11**, **13**, **16** and **20** may be constructed of non-conductive plastic, such as Mylar. The conductor patterns may be vapor deposited onto the layers, and the apertures may be formed in the center layer by a suitable etching process. In the embodiments illustrated in FIGS. **4** and **5**, all layers may be constructed of translucent Mylar.

The present invention thus provides a touch entry membrane switch array which is easily fabricated and operated. The apparatus may be moisture sealed thereby providing a device which is rugged in use. The switch array is compact and lightweight for easy portability. For example, a switch array in accordance with the present invention may include 512 switches mounted in a matrix in a 4 inch × 7 inch space with each switch region comprising an area of approximately 3/16 inch × 3/16 inch.

This invention is not to be limited by the embodiments shown in the drawings and described in the description, which are given by way of example and not of limitation, but only in accordance with the scope of the appended claims.

What is claimed is:

1. A touch entry switch array having a plurality of individual switches arranged in a matrix, said array comprising: first, second and third layers, said second layer being sandwiched between said first and third layers; a plurality of first conductor means supported on said first layer; a plurality of second conductor means supported on one of said first and third layers; a plurality of third conductor means supported on said first layer means; said first, second and third conductor means being mutually electrically insulated from each other; a plurality of apertures through said second layer means, each aperture encompassing a region adjacent a pair of conductors comprising individual ones of said first and second conductor means; a plurality of indicator means supported on said first layer and electrically connected to said third conductor means; and operator means on said third layer for establishing electrical contact through said apertures between the first and second conductor means encompassed in the respective region, said third layer being translucent whereby the indicator means juxtapositioned each aperture may be viewed through said third layer.

2. Apparatus according to claim **1** wherein said plurality of first conductor means comprises a plurality of first conductors disposed in a substantially parallel relationship and said plurality of second conductor means comprises a plurality of second conductors disposed in a substantially parallel relationship orthogonal to said first conductor.

3. Apparatus according to claim **2** wherein said second conductors are supported on said first layer, contact means associated with each of said first and second conductors, said contact means being arranged in pairs of contacts, each pair of contacts being electrically connected to mutually exclusive first and second conductors, each pair of contacts being exposed to mutually exclusive regions encompassed by mutually exclusive apertures in said second layer; and said third layer comprises a resilient translucent conductive layer adapted to establish electrical connection between the contacts of each of said pairs of contacts.

4. Apparatus according to claim 3 wherein said indicator means comprises a plurality of light emitting indicators each connected between mutually exclusive ones of said first and third conductors.

5. Apparatus according to claim 2 wherein said second conductors are supported on said third layer, said apertures each being positioned between projected intersections between mutually exclusive first and second conductors.

6. Apparatus according to claim 5 wherein said indicator means comprises a plurality of light emitting indicators each connected between mutually exclusive ones of said first and third conductors.

* * * * *