(No Model.) 2 Sheets—Sheet 1.

W. C. PRATT.

WIRE AND SLAT WEAVING MACHINE.

No. 600,269. Patented Mar. 8, 1898.

Fig. 1.

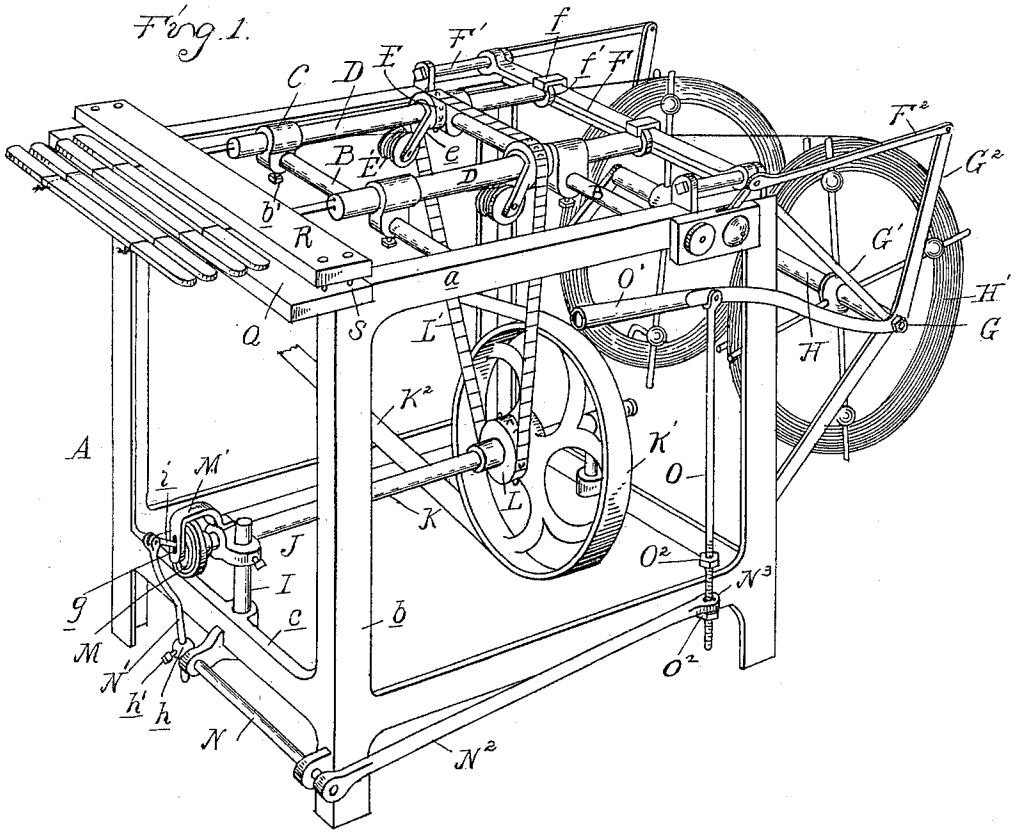

Fig. 2.

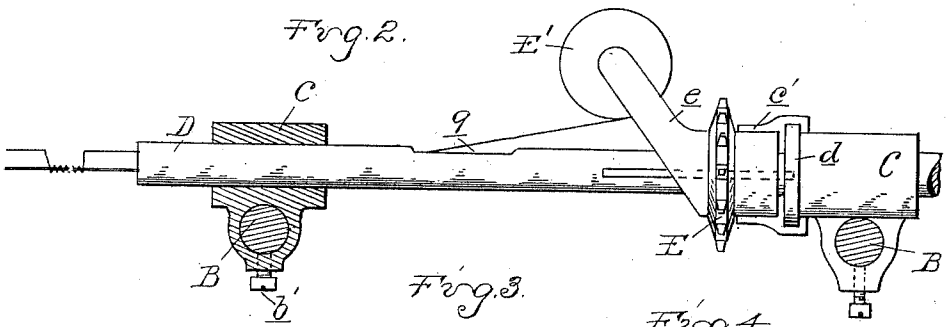

Fig. 3.

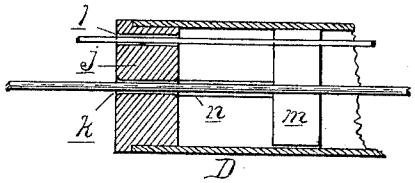

Fig. 4.

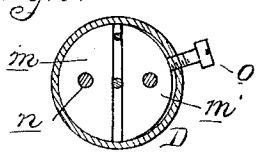

Witnesses
Otto A. Bartlett
M. B. Dougherty

Inventor
Walter C. Pratt
By Thos. G. Sprague & Son
Attys.

THE NORRIS PETERS CO., PHOTO-LITHO., WASHINGTON, D. C.

(No Model.) 2 Sheets—Sheet 2.

W. C. PRATT.

WIRE AND SLAT WEAVING MACHINE.

No. 600,269. Patented Mar. 8, 1898.

Fig. 6.

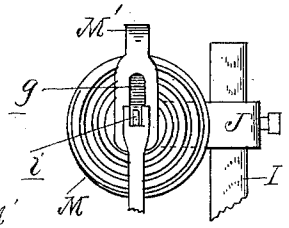

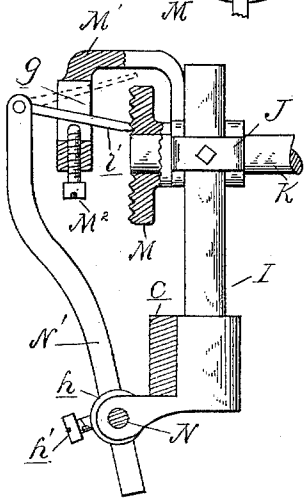

Fig. 5.

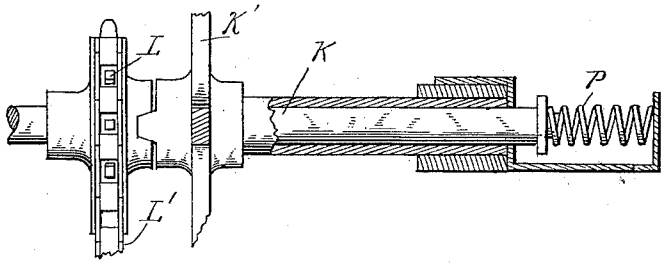

Fig. 7.

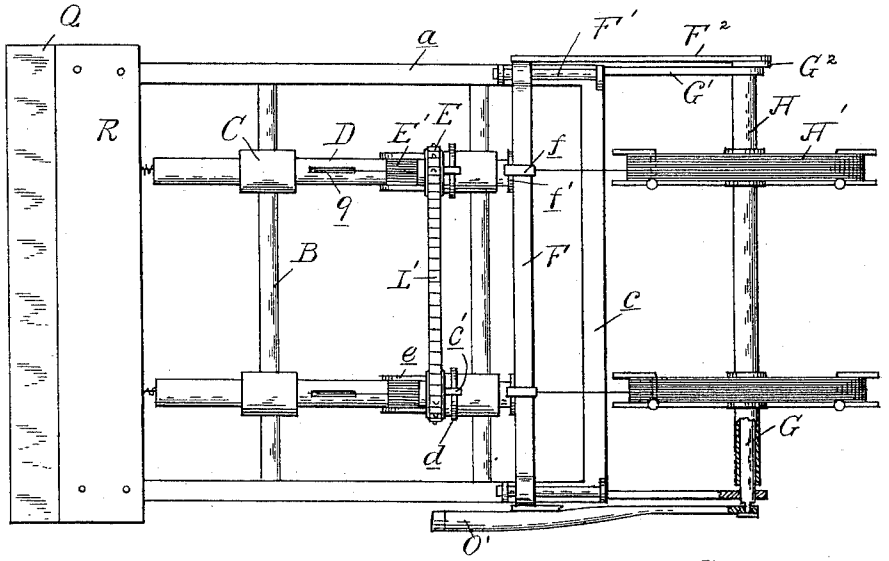

Witnesses
Otto F. Barthel
M. B. Dogherty

Inventor
Walter C. Pratt
By Munn & Co
Attys.

THE NORRIS PETERS CO., PHOTO-LITHO., WASHINGTON, D. C.

UNITED STATES PATENT OFFICE.

WALTER C. PRATT, OF LANSING, MICHIGAN.

WIRE-AND-SLAT-WEAVING MACHINE.

SPECIFICATION forming part of Letters Patent No. 600,269, dated March 8, 1898.

Application filed September 18, 1897. Serial No. 652,099. (No model.)

To all whom it may concern:

Be it known that I, WALTER C. PRATT, a citizen of the United States, residing at Lansing, in the county of Ingham and State of Michigan, have invented certain new and useful Improvements in Wire-and-Slat-Weaving Machines, of which the following is a specification, reference being had therein to the accompanying drawings.

My invention relates to that class of wire-and-slat-weaving machines comprising a clamp for holding the slat, rotary and longitudinally-reciprocating twisters, and means for alternately rotating and reciprocating said twisters to respectively twist the wires between the slats and to withdraw the twisters to feed in a new slat.

The invention consists in the peculiar construction and arrangement of parts, whereby a single lever controls all of the operating parts of the machine; further, in the construction of the automatic releasing device for the clutch; further, in the construction of parts which permit of a ready adjustment of the twisters toward or from each other for different widths of fabric, and, further, in the peculiar construction, arrangement, and combination of parts, as more fully hereinafter described and claimed.

In the drawings, Figure 1 is a perspective view of my improved machine. Fig. 2 is a sectional elevation of one of the twisters. Fig. 3 is an enlarged longitudinal section through the wire tension device for the twister. Fig. 4 is a cross-section thereof. Fig. 5 is an elevation, partly in section, of the drive-shaft with its clutch and automatic releasing mechanism. Fig. 6 is an end elevation thereof, and Fig. 7 is a plan view of the machine.

A is a suitable framework for supporting the operating parts of the machine, preferably of rectangular form and comprising the top side rails *a*, the corner-legs *b*, and the lower cross-bars *c*.

B are cross-bars extending between the rails *a*, upon which are sleeved the bearings C, adjustably secured in position by set-screws *b'* and forming journals for the parallel twisters D. These twisters are of tubular form and are adapted to slide longitudinally in the bearings C.

E are sprockets feathered upon the twisters D and secured to the bearing C, preferably by means of the hooks *c'*, secured to the sprockets, engaging with annular flanges *d* on the bearings. Each sprocket is provided with the outwardly-projecting ears *e*, between which is pivotally secured a spool E', carrying the binding-wire.

F is a cross-bar in rear of the twisters, slidingly secured at its ends upon the guide-rails F' and secured to the twisters by means of the hooks *f*, engaging with the annular flanges *f'* on the twisters.

G is a rock-shaft journaled in the brackets G', secured to the rear of the frame A.

G^2 are rock-arms extending upward from the shaft G and connected by links F^2 with the ends of the cross-bar F.

H is a sleeve upon the shaft G, upon which are laterally adjustably secured the reels H' for carrying the main wires which pass from the reels into the ends of the twisters.

Secured to the front and rear cross-bars *c* of the frame A are the upwardly-extending shafts or posts I, on which are vertically adjustably secured the bearings J. These bearings form the journals for the horizontal shaft K, on which is mounted the sprocket L, connected by the chain L' with the sprockets E.

K' is a pullley sleeved upon the shaft K and driven by the belt K^2. This pulley is secured by a connection with one of the bearings J, which holds it from lateral movement, while the shaft K is free to move longitudinally through the bearings and the pulley. The adjacent faces of the pulley and sprocket are notched, so as to form the members of a clutch which when the sprocket is moved against the pulley will couple the two together.

M is a disk at the end of the shaft K, provided on its outer face with a spiral thread.

M' is a bracket or yoke extending from the bearing J around the disk M and provided on its front side with the slot *g*.

N is a rock-shaft journaled in bearings on the frame and provided at one end with the rock-arm N' and at the opposite end with the rock-arm N^2. The arm N' is adjustably secured to a socket *h* on the rock-shaft by means of a set-screw *h'*, so that it may be adjusted in length. At its free end is pivotally secured a pawl *i*, extending through the slot *g* in the bracket M' and bearing against the

disk M, where it engages with the spiral thread on the face of said disk.

M^2 is a screw at the lower end of the bracket, extending into the slot *g* and serving to limit its length.

The arm N^2 is connected at its free end with the link or connecting-rod O, the upper end of which is connected to an arm or operating-lever O′, which is secured to the shaft G, being preferably formed integral with one of the arms G^2. The connection between the arm N^2 and the link O is preferably formed by an eye N^3 on the end of the arm threaded on the link and two adjustable collars or nuts O^2 on the link on opposite sides of this eye, thus making a lost-motion connection between the link and arm.

P is a spring at the opposite end of the shaft K from that to which the disk M is secured, which spring normally holds the shaft in a position where the two members of the clutch are disengaged from each other, the parts thus far described being so arranged that a downward movement of the operating-lever O′ will first slide the twisters longitudinally in their bearings through the medium of the rock-shaft G, rock-arms G^2, links F^2, and cross-bar F, and then will couple the sprocket L with pulley K′ by moving the rock-arm N^2, which rocks the shaft N and arm N′, pressing the pawl *i* against the disk M and moving the shaft K, which carries the sprocket L, into engagement with the pulley K′.

Each of the twisters D is provided at its forward end with the plug or cap *j*, having a central aperture *k*, through which the main wire passes, and the eccentric aperture *l*, through which the binding-wire passes. In rear of this plug is a tension device comprising the jaws *m* and *m′*, between which both the main and binding wires pass. These jaws are preferably secured to the plug *j* by means of the spring-arms *n* and are clamped upon the wires with any desired tension by means of a set-screw *o*, passing through the twister-tube.

q is a slot in the side of each twister through which the binding-wire passes in from the spool E′.

At the forward part of the frame A, in front of the twisters, is a clamp or vise for holding the slats and comprising the lower member Q, secured to the frame, and the upper member R, adjustably secured by clamping-bolts S.

The parts being constructed as shown and described, the complete operation of the machine is as follows: The twisters D are first spaced the proper distance from each other, (according to the width of fabric to be woven,) the adjustment being made by sliding the bearing C on the cross-bar B and then securing them by the set-screws *b′*. This adjustment of the twisters also necessitates an adjustment of the shaft K in order to keep the chain L′ in proper engagement with the sprockets L E E, which adjustment may be accomplished by moving the bearings J up or down on the vertical post I. The main wires are placed in coils on the reels H′, and these reels are adjusted on the sleeve H into alinement with the twisters. The binding-wire is placed on the spools E′, and both sets of wires are then threaded through the tension-clamp and respectively out through the apertures *k* and *l* in the end of plugs *j*. The first slat is then placed in the vise with the main wire passing beneath and the binding-wire above the slat. The operator then depresses the lever O′, which, as before described, slides the twisters forward against the slat, and just before they reach the limit of their movement the collar O^2 on the connecting-rod O, striking against the arm N^2, will rock that arm and through the mechanism before described will engage the two members of the clutch. This will cause the twisters to rotate and coil the binding-wire around the main wire. At the same time the rotation of the disk M will cause the pawl *i* to travel in the spiral groove until after a certain number of revolutions the pawl is forced to the edge of the disk, whereupon the spring P will return the shaft K to its normal position and release the clutch, thus stopping the rotation of the twisters. The operator then raises the lever O′, which moves the twisters back sufficiently to permit of inserting another slat between the main and binding wires and also rocks the arm N^2 back, carrying the pawl *i* back in front of the disk, where it drops again to the lower end of the slot *g*. The first operation of depressing the lever O′ is now repeated, and the twisters in traveling forward will push the slat before them between the jaws of the vise, after which the operation is the same as before described.

To regulate the number of coils between the slats, the set-screw M^2 may be adjusted to change the thread with which the pawl *i* engages.

What I claim as my invention is—

1. The combination with the rotary and longitudinally-movable twisters, a drive-shaft for rotating the same, and a clutch intermediate between said drive-shaft and twisters and adapted to automatically be thrown out after a certain number of turns, of a single lever adapted to reciprocate the twisters and throw in said clutch.

2. The combination with the rotating and longitudinally-movable twisters, a drive-shaft for rotating the same, and a clutch intermediate between said drive-shaft and twisters and adapted to be thrown out automatically after a certain number of turns, of a lever for reciprocating the twisters and for throwing in said clutch, and a lost-motion connection between said lever and the clutch-operating mechanism permitting said longitudinal movement of the twisters before the operation of the clutch.

3. In a wire-and-slat-weaving machine, the combination with the frame, of twisters jour-

naled in bearings laterally adjustable on said frame, and a drive-shaft having a sprocket-and-chain connection with said twisters and journaled in vertically-adjustable bearings on said frame.

4. In a wire-and-slat-weaving machine, the combination with the frame having a work-clamp thereon, of a twister journaled in a bearing on said frame and adapted to be moved longitudinally therein toward and from said clamp, and a sprocket feathered upon said twister and held from longitudinal movement by said bearing.

5. In a wire-and-slat-weaving machine, the combination with the frame having a work-clamp thereon, of a twister journaled in a bearing on said frame and adapted to be moved longitudinally therein toward and from said clamp, a sprocket feathered upon said twister and held from longitudinal movement by said bearing, and a spool carried by said sprocket and adapted to hold the binding-wire.

6. The combination with a frame having cross-bars thereon and a work-clamp at one end, of bearings laterally adjustable on said cross-bars, rotary twisters journaled in said bearings and longitudinally movable therein toward or from said clamp, sprockets carrying spools for the binding-wires feathered upon said twisters and held from longitudinal movement by said bearings, a cross-head connected to said twisters and slidingly secured to said frame, a rock-shaft journaled at the rear of said frame, rock-arms thereon connected to said cross-head, an operating-lever for rocking said shaft to reciprocate said twisters, and reels carrying the main wires sleeved upon said rock-shaft and laterally adjustable thereon.

7. In a wire-and-slat-weaving machine, the combination with a tubular twister having an apertured plug at its forward end through which the wires pass, of a tension device for the wires, comprising two jaws secured in said tube in rear of said plug and between which said wires pass, and a set-screw passing through said tube and bearing on one of said jaws.

In testimony whereof I affix my signature in presence of two witnesses.

WALTER C. PRATT.

Witnesses:
WM. H. PINCKNEY,
WILLIAM W. SLY.