Nov. 26, 1940. S. E. VAN TUYL ET AL 2,223,052

COIN RELEASE MECHANISM

Filed Jan. 17, 1938 12 Sheets-Sheet 1

Fig. 11.

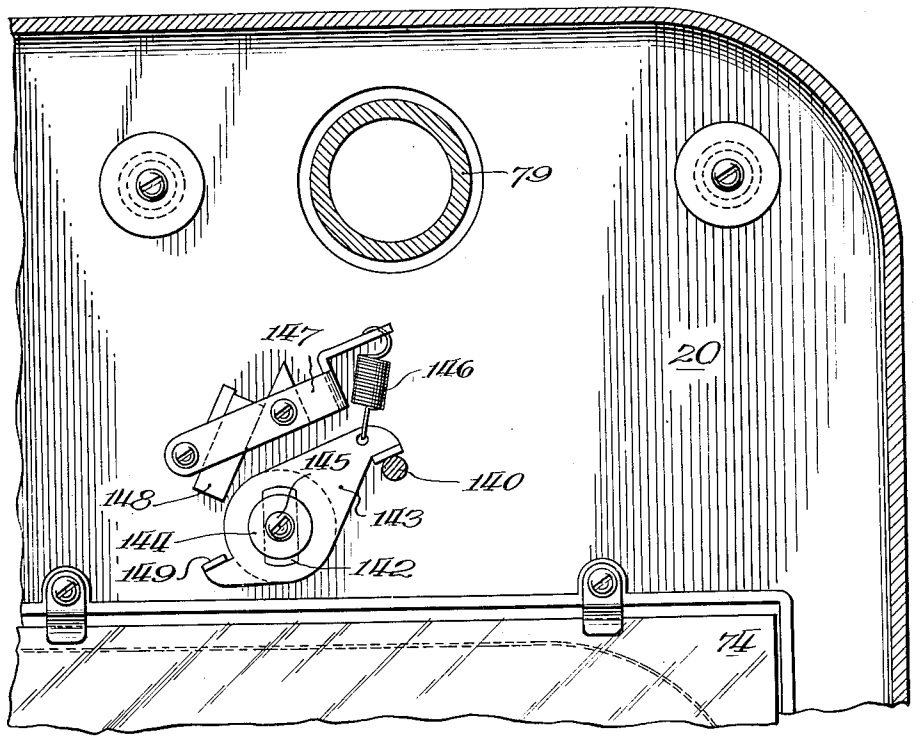

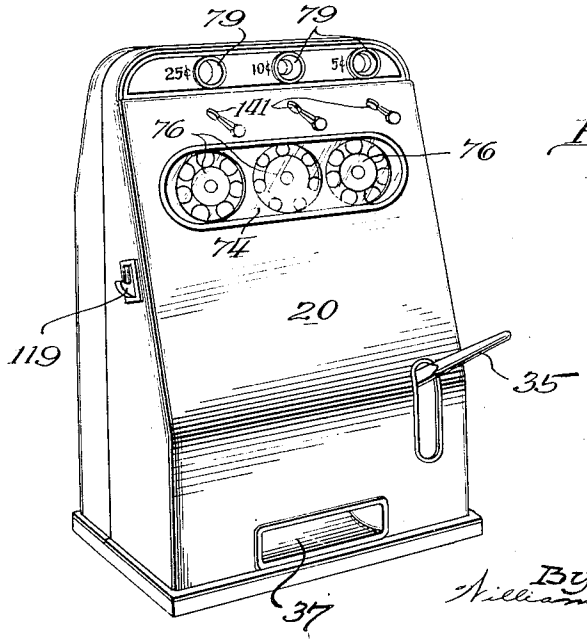

Fig. 1.

Inventors.
Sidney E. Van Tuyl
Emery Mihalek
Charles Szyper
By Williams, Bradbury, McCaleb & Hinkle
Attys.

Nov. 26, 1940. S. E. VAN TUYL ET AL 2,223,052

COIN RELEASE MECHANISM

Filed Jan. 17, 1938 12 Sheets-Sheet 2

Fig. 2.

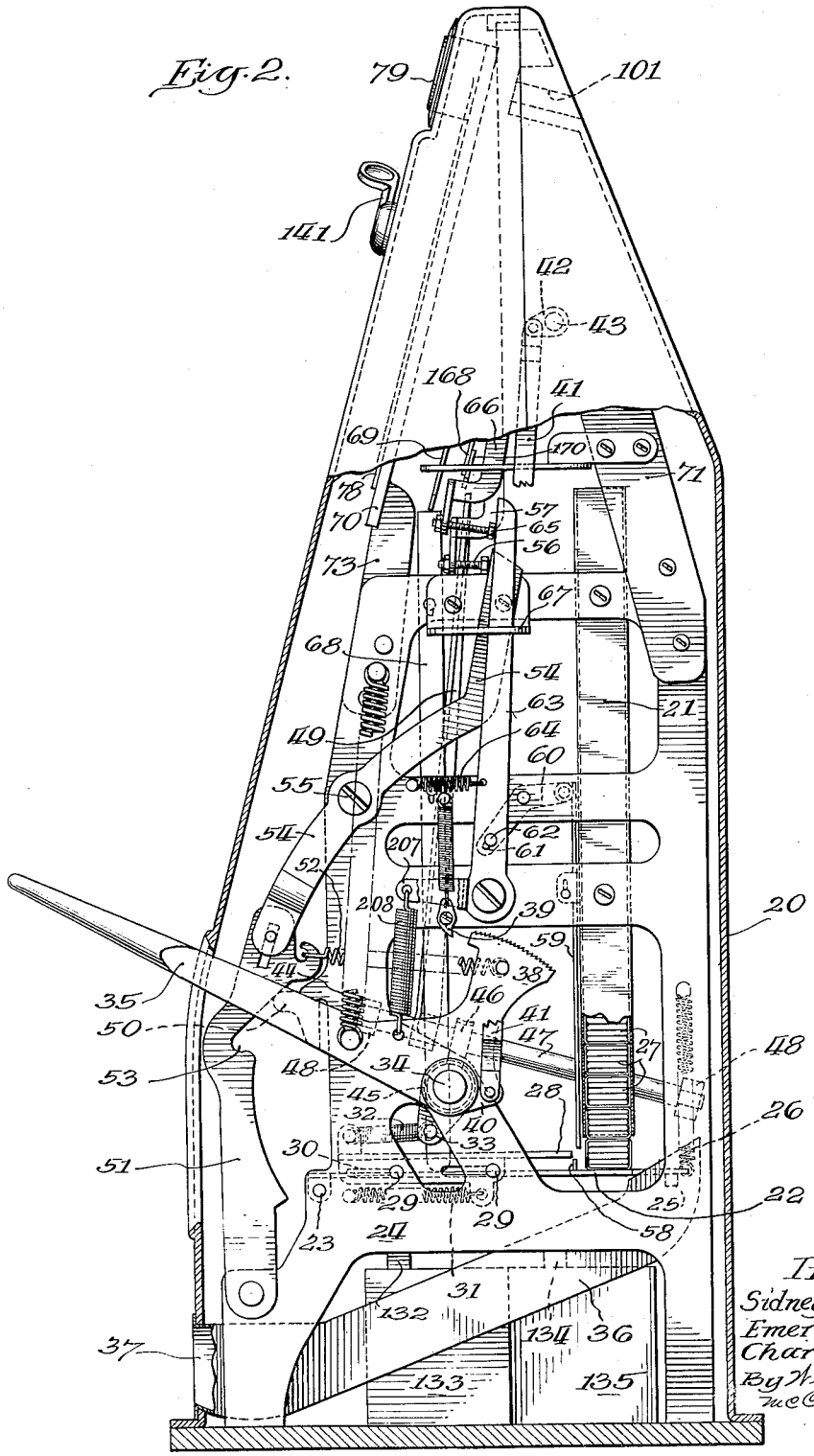

Inventors
Sidney E. Van Tuyl
Emery Mihalek
Charles Szyper
By Williams, Bradbury, McCall & Hinkle
Attys.

Nov. 26, 1940. S. E. VAN TUYL ET AL 2,223,052

COIN RELEASE MECHANISM

Filed Jan. 17, 1938 12 Sheets-Sheet 3

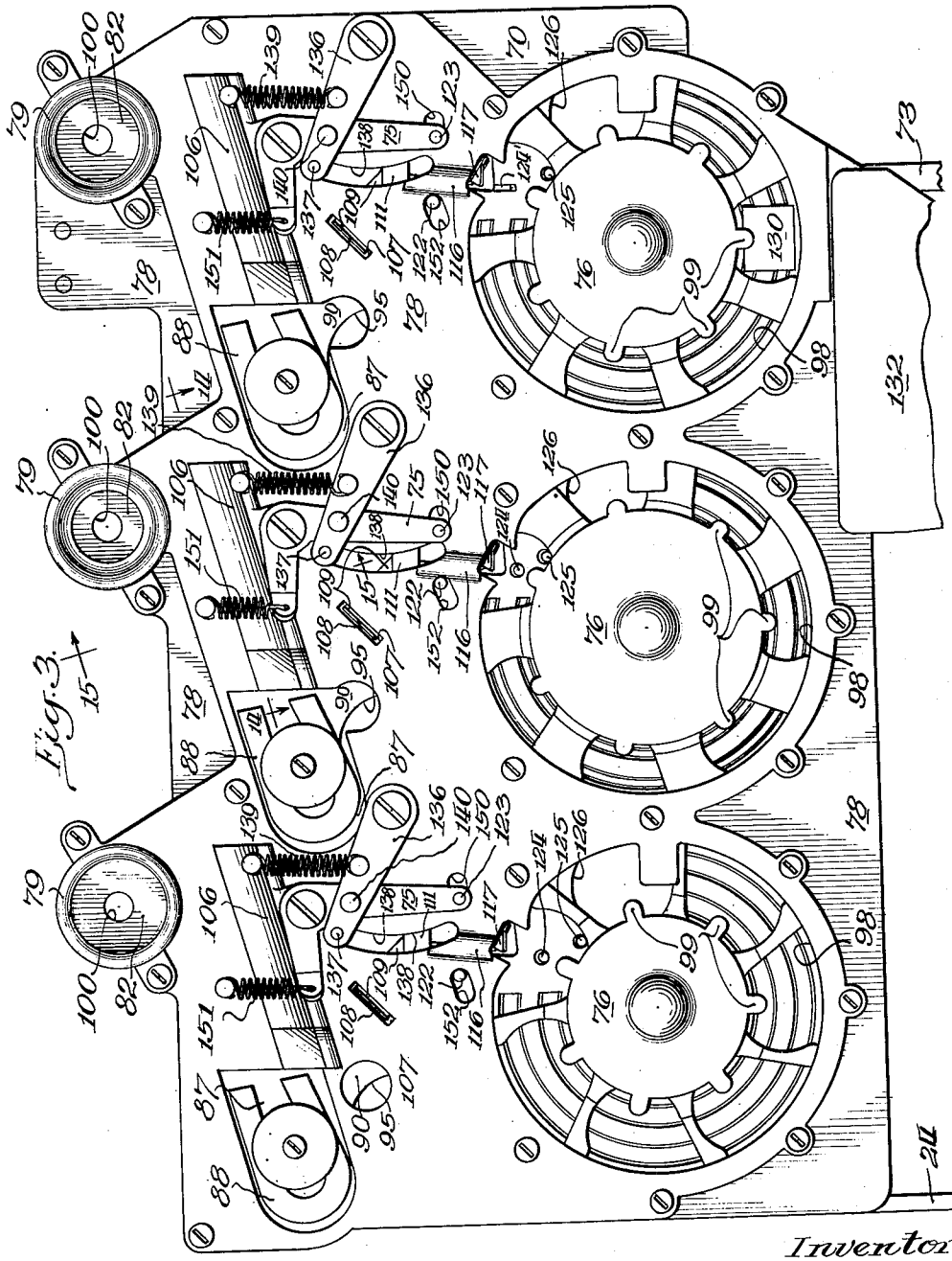

Fig. 3.

Inventors
Sidney E. Van Tuyl
Emery Mihalek
Charles Szyper
By Williams, Bradbury, McCoach & Hinkle
Attys.

Nov. 26, 1940. S. E. VAN TUYL ET AL 2,223,052

COIN RELEASE MECHANISM

Filed Jan. 17, 1938 12 Sheets-Sheet 4

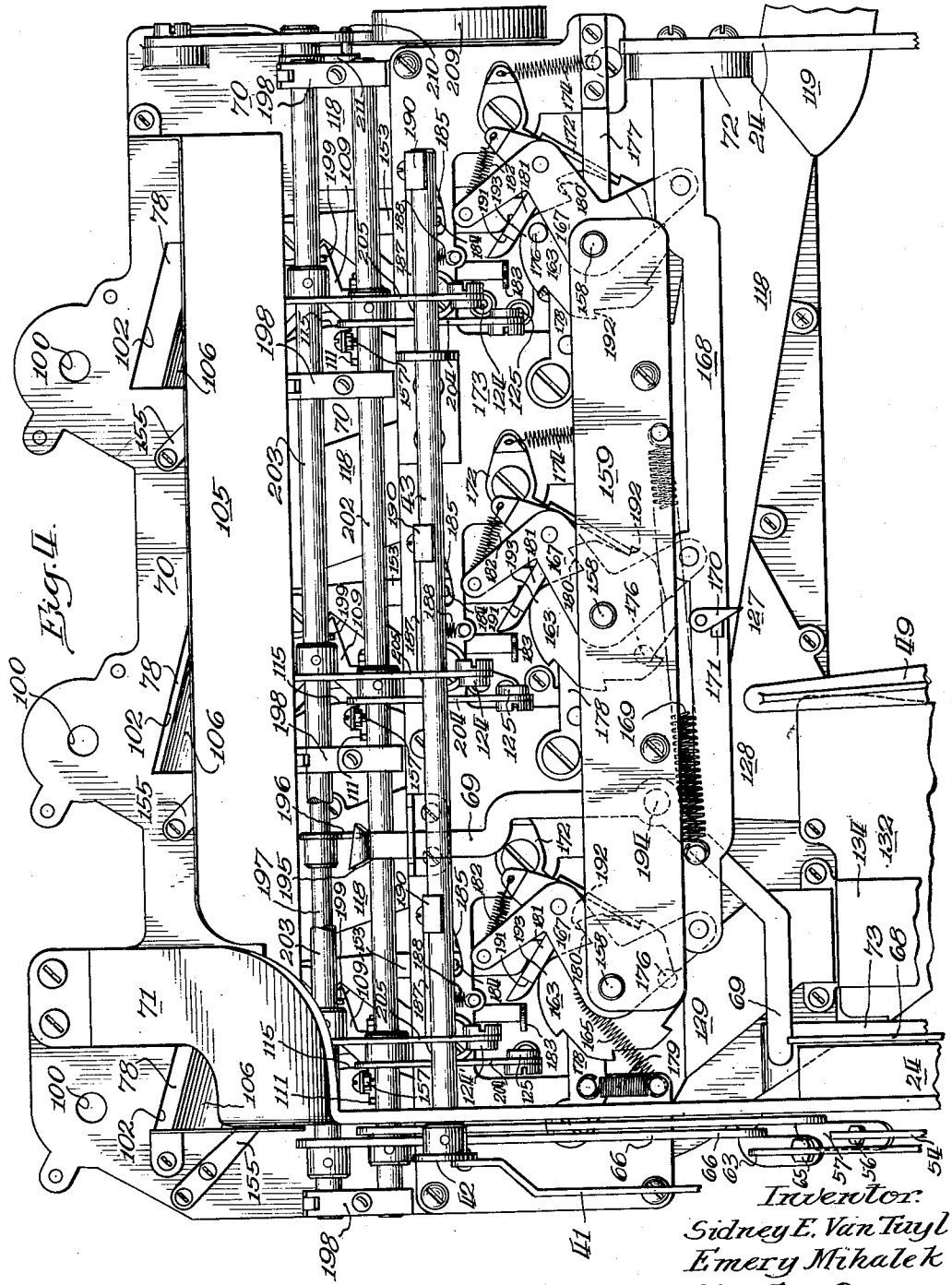

Fig. 4.

Inventor:
Sidney E. Van Tuyl
Emery Mihalek
Charles Szyper
By Williams, Bradbury, McCaleb & Hinkle
Attys.

Nov. 26, 1940. S. E. VAN TUYL ET AL 2,223,052

COIN RELEASE MECHANISM

Filed Jan. 17, 1938 12 Sheets-Sheet 5

Fig-5.

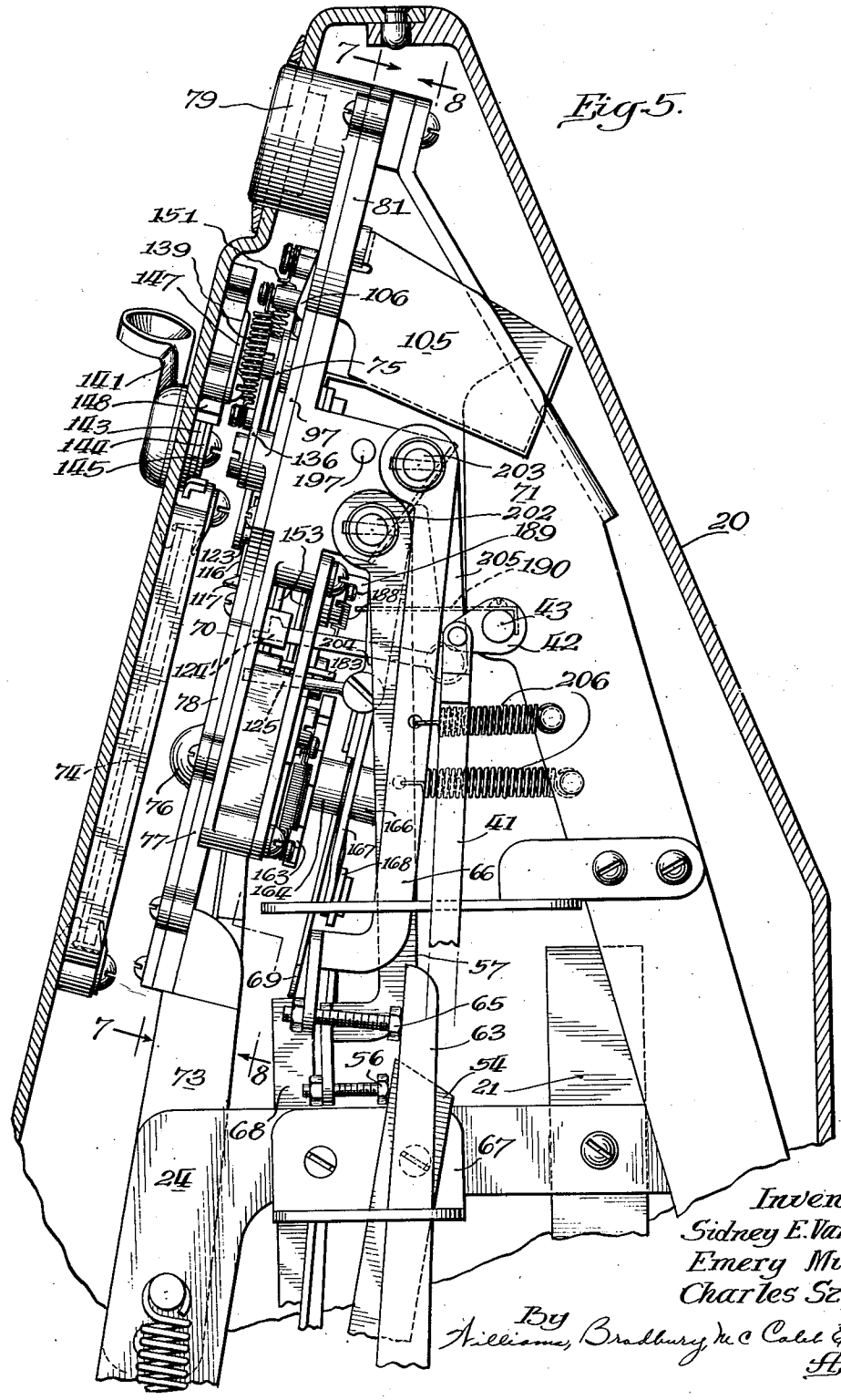

Inventors.
Sidney E. Van Tuyl
Emery Mihalek
Charles Szyper

By Williams, Bradbury, McCaleb & Hinkle
Attys.

Nov. 26, 1940. S. E. VAN TUYL ET AL 2,223,052

COIN RELEASE MECHANISM

Filed Jan. 17, 1938 12 Sheets-Sheet 6

Fig. 6.

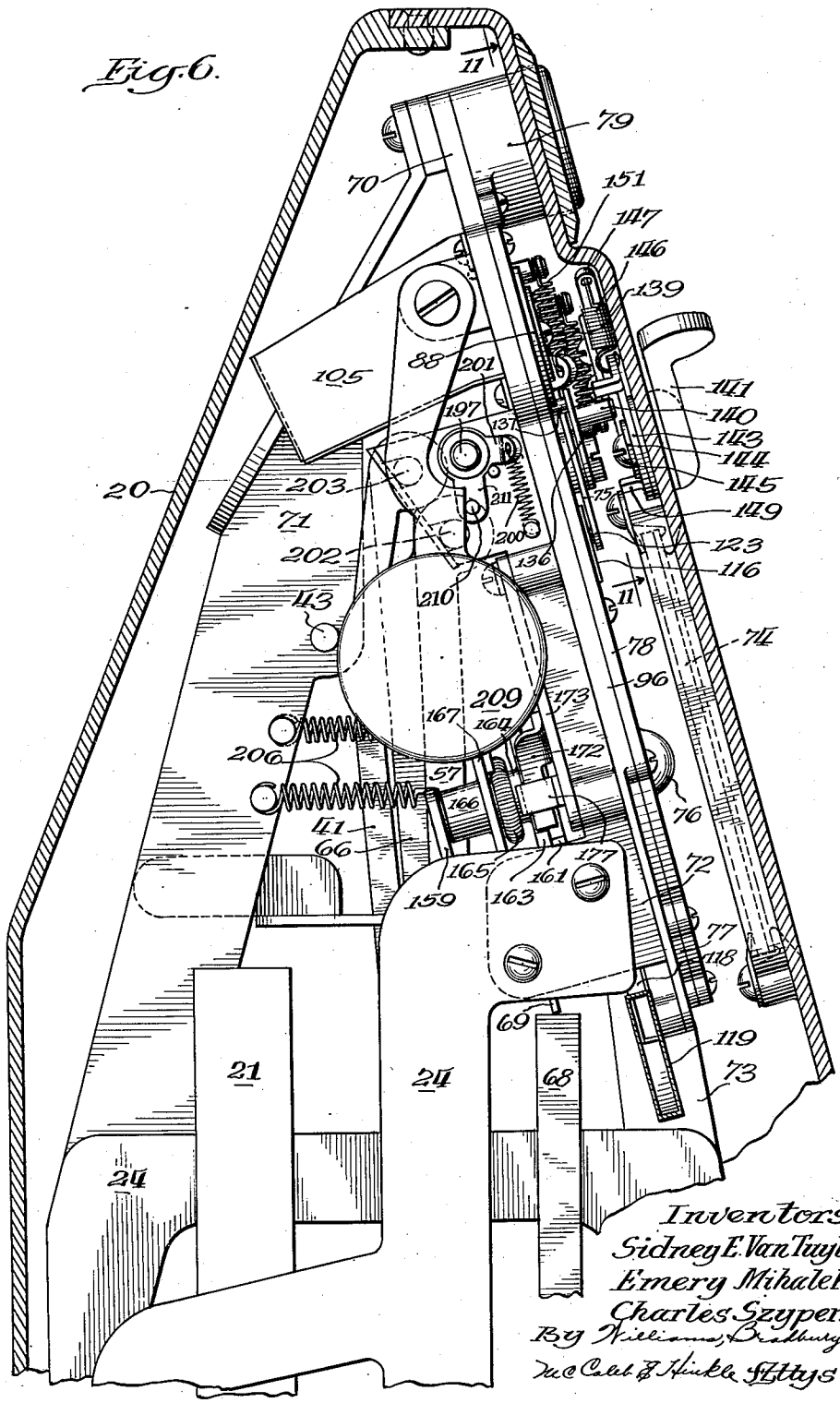

Inventors.
Sidney E. Van Tuyl
Emery Mihalek
Charles Szyper.
By Williams, Bradbury,
McCaleb & Hinkle Attys

Nov. 26, 1940. S. E. VAN TUYL ET AL 2,223,052

COIN RELEASE MECHANISM

Filed Jan. 17, 1938 12 Sheets-Sheet 7

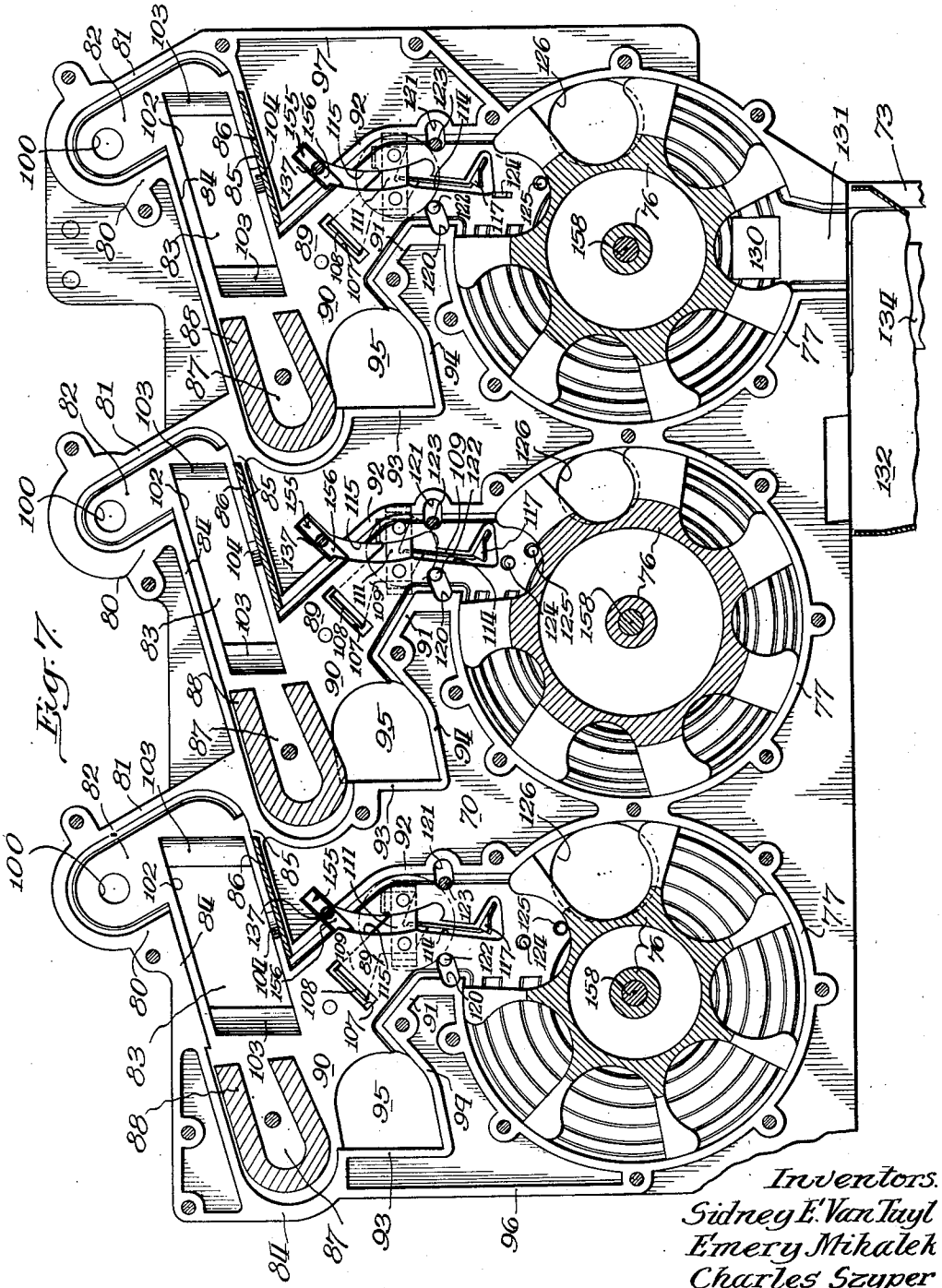

Fig. 7.

Inventors.
Sidney E. Van Tuyl
Emery Mihalek
Charles Szyper
By Williams, Bradbury, McCall & Hinkle
Attys.

Nov. 26, 1940. S. E. VAN TUYL ET AL 2,223,052

COIN RELEASE MECHANISM

Filed Jan. 17, 1938 12 Sheets-Sheet 8

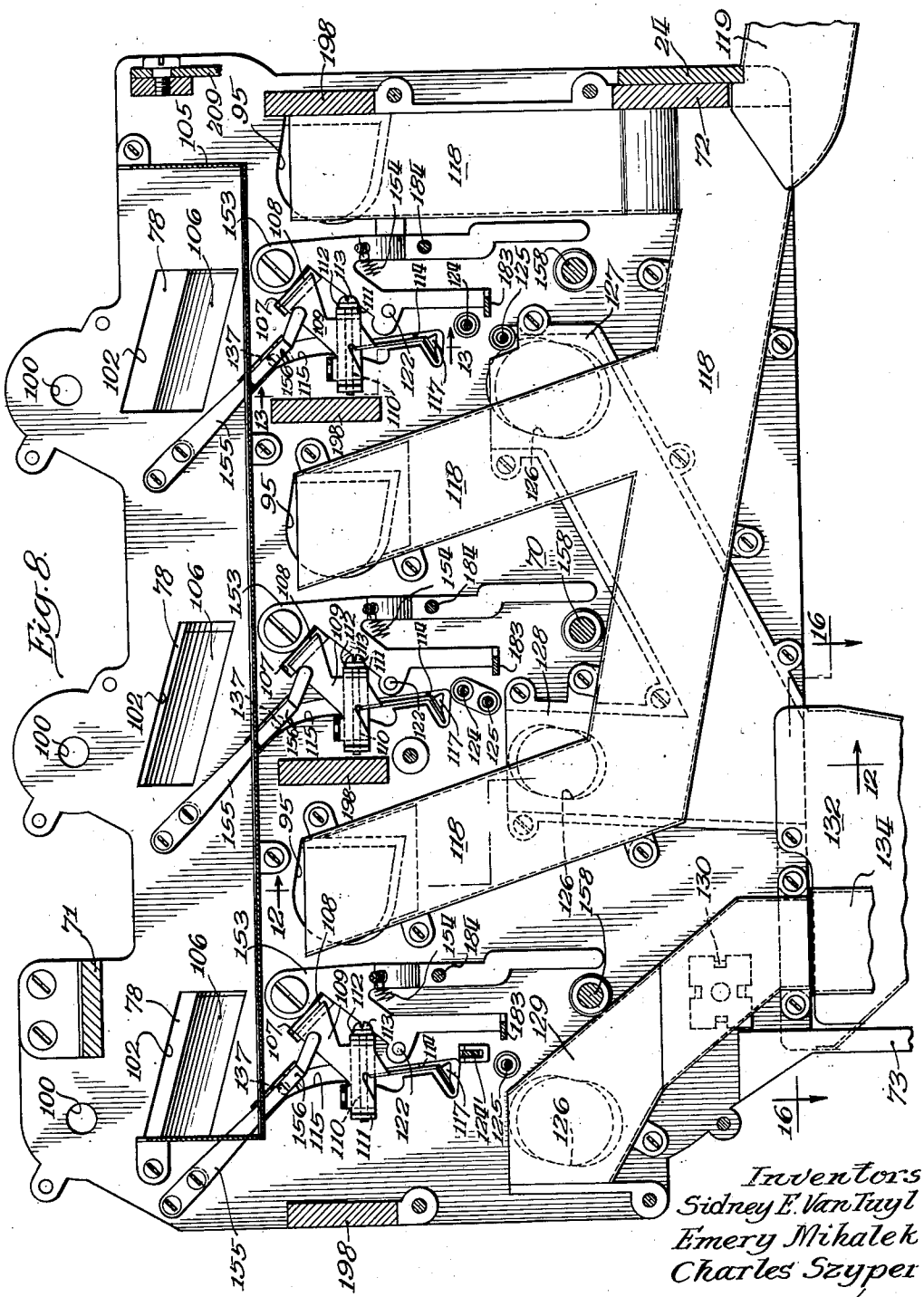

Fig. 8.

Inventors
Sidney E. Van Tuyl
Emery Mihalek
Charles Szyper
By Williams, Bradbury, McCall & Hinkle
Attys.

Nov. 26, 1940. S. E. VAN TUYL ET AL 2,223,052

COIN RELEASE MECHANISM

Filed Jan. 17, 1938 12 Sheets-Sheet 9

Fig. 9.

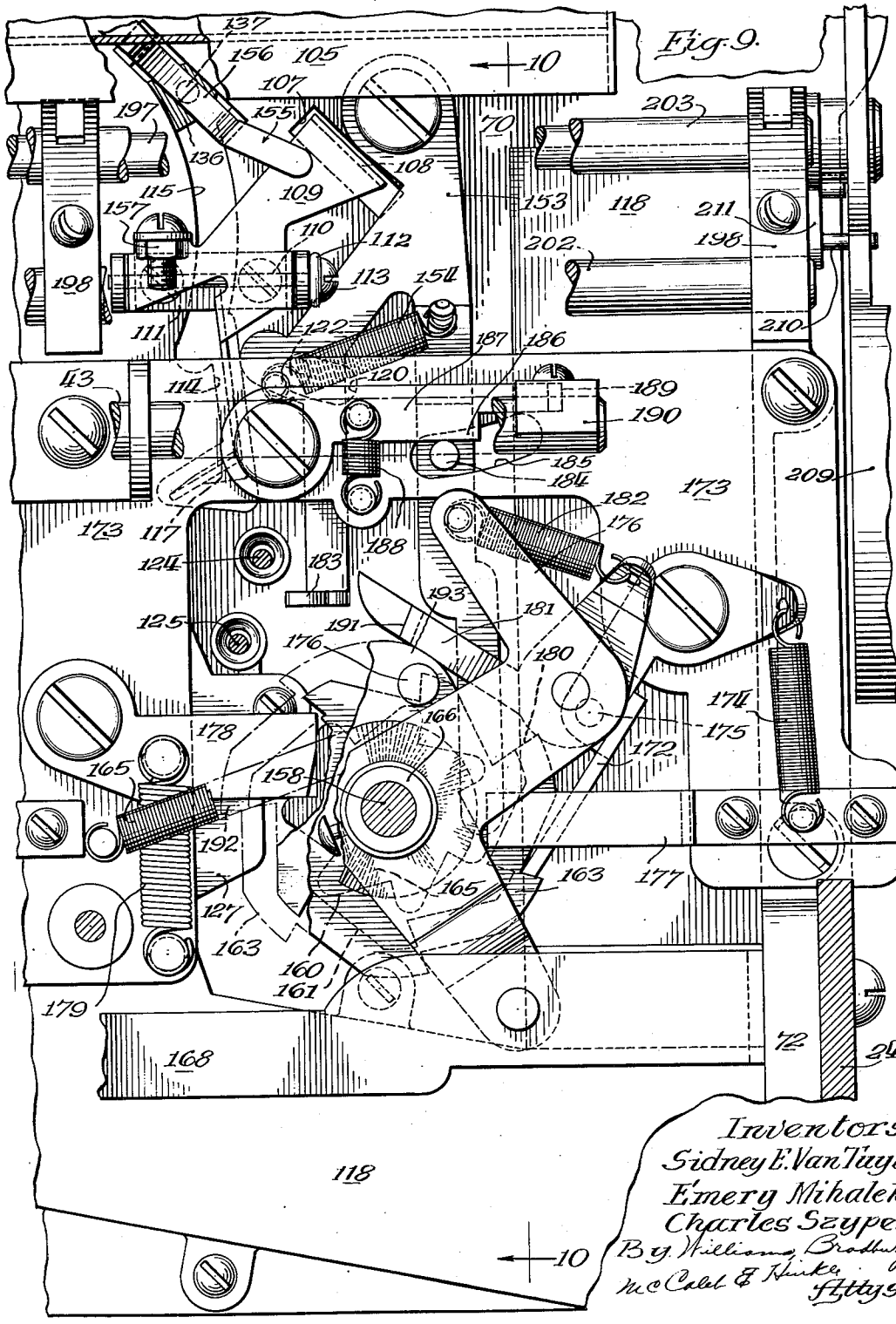

Inventors
Sidney E. Van Tuyl
Emery Mihalek
Charles Sayper
By Williams, Bradbury, McCaleb & Hinkle
Attys.

Nov. 26, 1940. S. E. VAN TUYL ET AL 2,223,052

COIN RELEASE MECHANISM

Filed Jan. 17, 1938 12 Sheets-Sheet 10

Fig. 10.

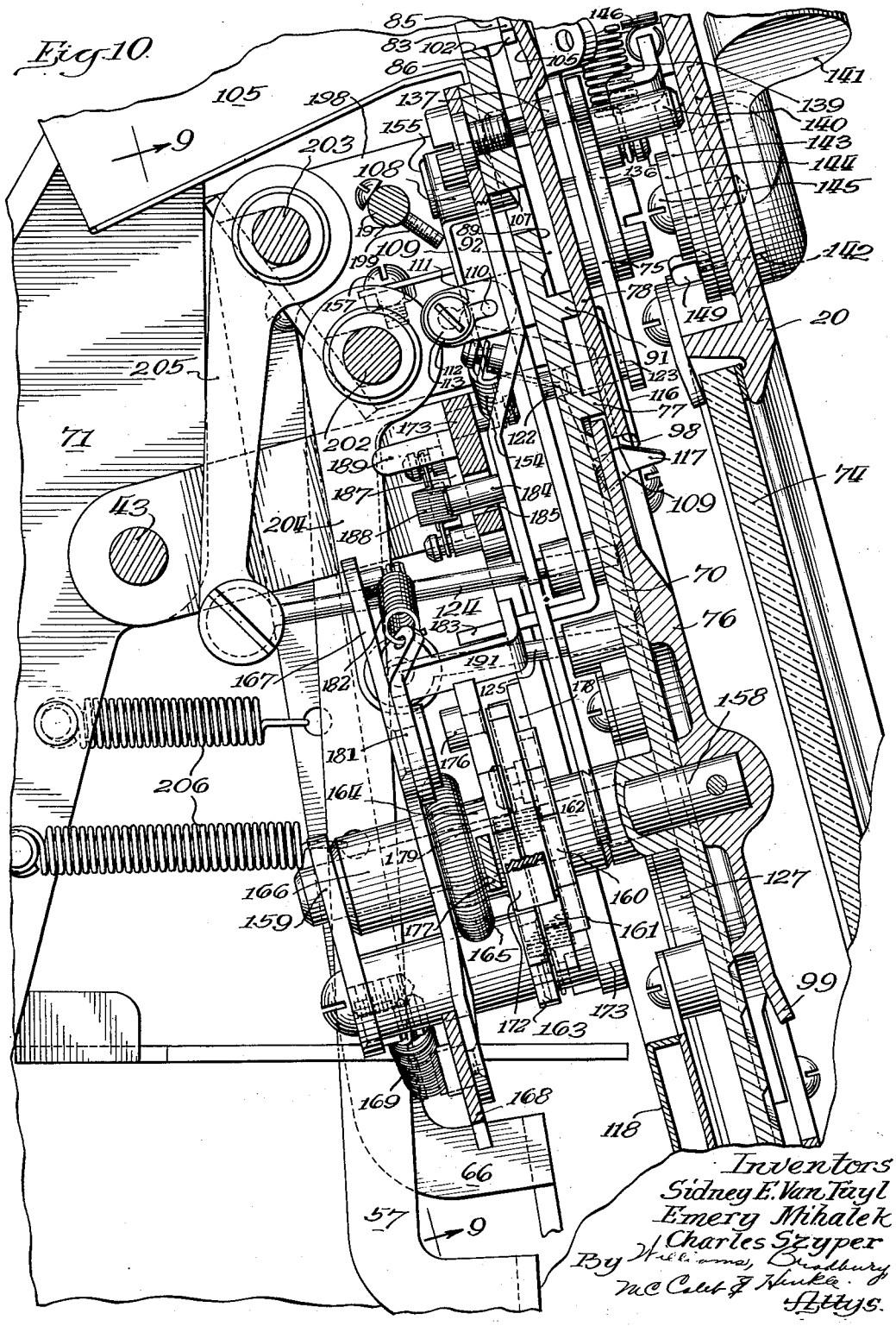

Inventors
Sidney E. Van Tuyl
Emery Mihalek
Charles Szyper
By Williams, Bradbury
McCaleb & Hinkle
Attys.

Nov. 26, 1940. S. E. VAN TUYL ET AL 2,223,052

COIN RELEASE MECHANISM

Filed Jan. 17, 1938 12 Sheets-Sheet 11

Fig. 12.

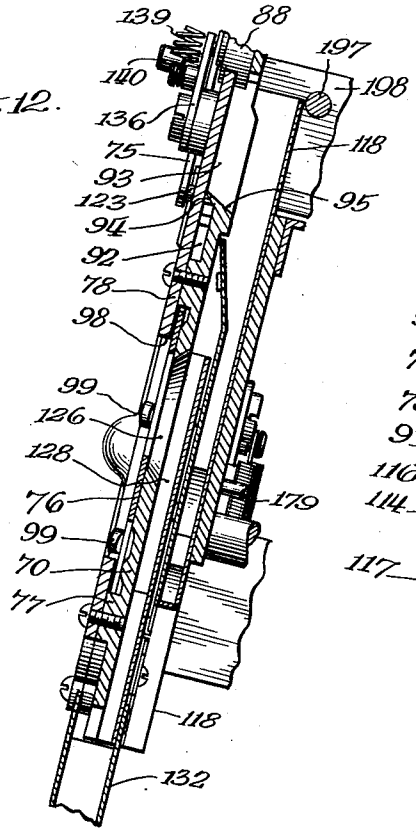

Fig. 13.

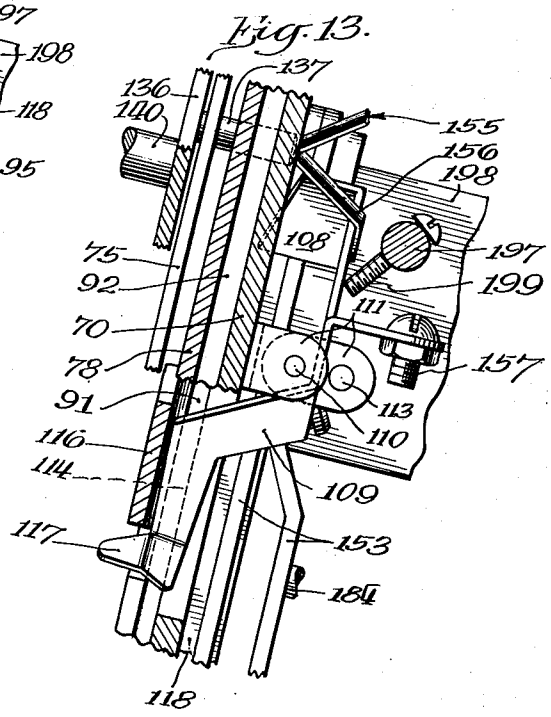

Fig. 14.

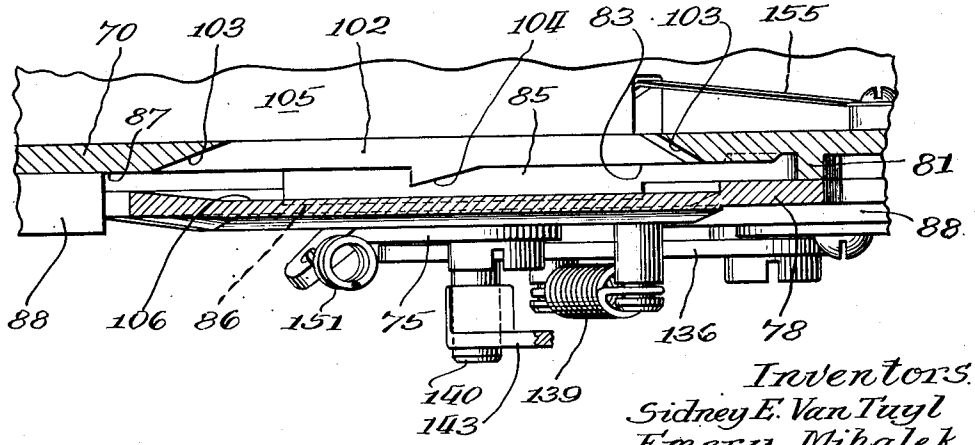

Inventors.
Sidney E. Van Tuyl
Emery Mihalek
Charles Szyper
By
Williams, Bradbury, McCaleb & Hinkle
Attys.

Nov. 26, 1940. S. E. VAN TUYL ET AL 2,223,052

COIN RELEASE MECHANISM

Filed Jan. 17, 1938 12 Sheets-Sheet 12

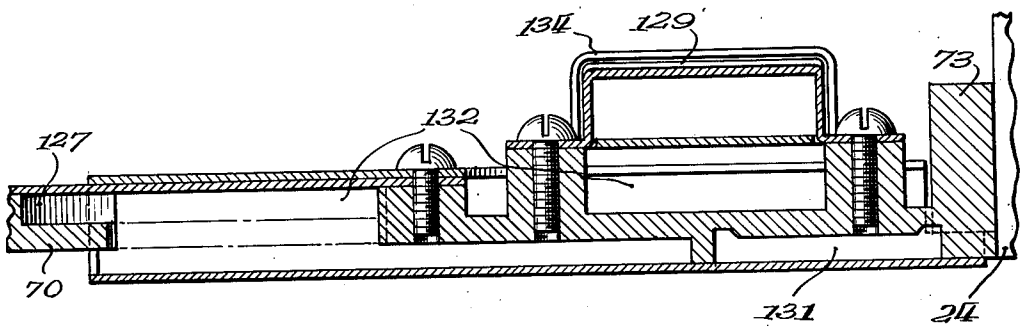

Fig. 16.

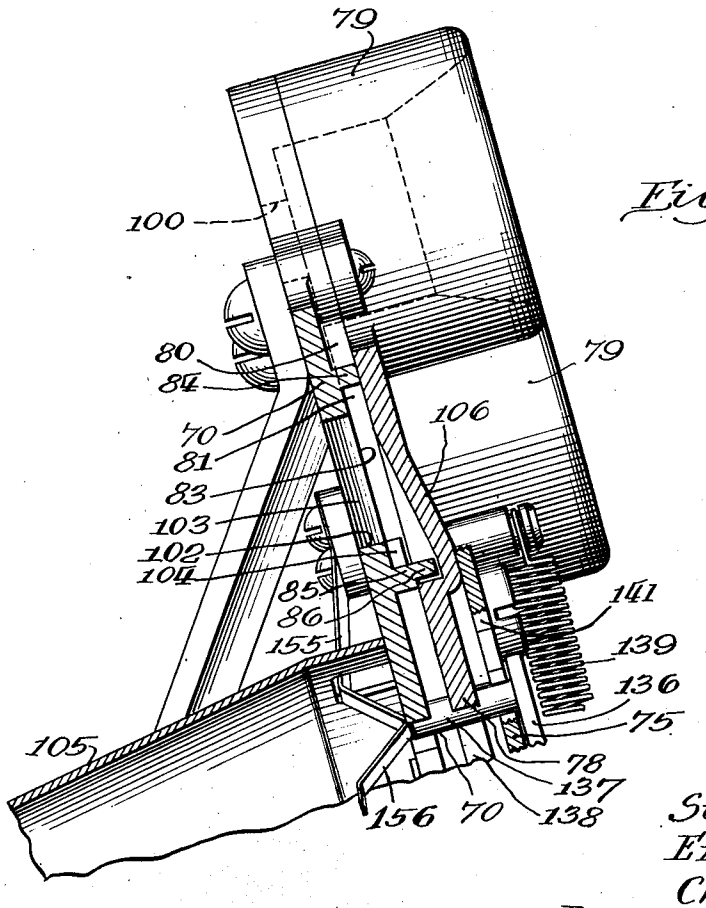

Fig. 15.

Inventors
Sidney E. Van Tuyl
Emery Mihalek
Charles Szyper
By Williams, Bradbury, McCaleb & Hinkle
Attys.

Patented Nov. 26, 1940 2,223,052

UNITED STATES PATENT OFFICE

2,223,052

COIN RELEASE MECHANISM

Sidney E. Van Tuyl, Berwyn, Emery Mihalek and Charles Szyper, Chicago, Ill., assignors to O. D. Jennings and Company, Chicago, Ill., a corporation of Illinois

Application January 17, 1938, Serial No. 185,344

14 Claims. (Cl. 194—2)

This invention relates to coin released mechanism and has for its principal object the provision of such a mechanism which is adapted to receive coins of several denominations to be released thereby for an appropriate number of actuations or operations.

While the invention may be applied to various mechanisms and machines, it is illustrated herein by way of example in its application to a vending machine in which a 5¢ coin frees the mechanism for the delivery of one package; a 10¢ coin frees the mechanism for the delivery of two packages; and a 25¢ coin frees the mechanism for the delivery of five packages.

The invention will more fully be understood from the following description of a preferred embodiment thereof, taken in conjunction with the accompanying drawings, in which:

Fig. 1 is a perspective view of the vending machine;

Fig. 2 is a side elevation of the machine as viewed from the right, the housing being broken away to show internal parts;

Fig. 3 is a front elevational view of the coin mechanism unit, the housing being removed;

Fig. 4 is a rear elevational view of the coin mechanism unit with the housing removed;

Fig. 5 is an elevational view of the upper part of the mechanism, as viewed from the right, the housing being shown in section to disclose the said mechanism;

Fig. 6 is a similar view, looking from the left;

Fig. 7 is a sectional view of the coin mechanism unit, as viewed from the front, the section being taken on the line 7—7 of Fig. 5;

Fig. 8 is a sectional view of the coin mechanism unit, as viewed from the rear, the section being taken on the line 8—8 of Fig. 5;

Fig. 9 is a rear elevational view of part of the coin mechanism unit appertaining to 25¢ actuation, the view being taken on the line 9—9 of Fig. 10;

Fig. 10 is a sectional view therethrough, the section being taken on the line 10—10 of Fig. 9;

Fig. 11 is a sectional detail view, the section being taken on the line 11—11 of Fig. 6, and

Figs. 12, 13, 14, 15 and 16 are sectional detail views, taken on the lines 12—12 of Fig. 8, 13—13 of Fig. 8, 14—14 of Fig. 3, 15—15 of Fig. 3, and 16—16 of Fig. 8, respectively.

Referring to the drawings, the mechanism comprises a housing 20 of suitable shape within which is located a merchandise tube 21. This tube terminates somewhat above the normal position of a plate 22. The plate 22 is pivotally mounted at 23 on a rigid frame 24 located within the housing. The merchandise tube 21 is rigidly carried by the frame 24.

The plate 22 is normally engaged by a stop 25 also carried by the frame 24 and is biased upwardly therefrom by a spring 26 which is so weak that the plate 22 is moved into engagement with the stop 25 by the weight of a single package of merchandise, the packages of merchandise being indicated by the reference numeral 27. As shown in Fig. 2, when the plate 22 is in its normal position, the lowermost package 27 is below the merchandising tube 21.

The lowest package of merchandise 27 is adapted to be dispensed by a dispensing plate 28 which is slidably mounted by pins 29 on the frame 24. These pins extend through slots in a marginal flange 30 on one side of the plate 28. The plate 28 is biased forwardly by a spring 31, and it is connected by a much stronger spring 32 which extends rearwardly and is anchored to an arm 33 rigidly carried by a shaft 34. When the arm 33 is moved rearwardly by the downward actuation of the handle 35 which is rigidly mounted on the shaft 34, the plate 28 is resiliently moved rearwardly so that it engages the lowest package 27 of the merchandise and forces the same into a dispensing tube 36 so that it may be picked up by the purchaser at the opening 37.

The handle 35 rigidly carries a toothed sector 38 which is adapted to cooperate with a pawl 39 so as to provide a full stroke mechanism. A projection 40 of the handle has pivotally connected thereto a bar 41 which extends upwardly within the housing and is pivotally connected to a short arm 42 rigidly mounted on a shaft 43 rotatably mounted in the upper part of the housing. The handle 35 is strongly biased upwardly by a spring 44. The shaft 34 on which the handle 35 is rigidly mounted carries a worm 45 which meshes with a worm gear 46 which is rigidly mounted on a shaft 47. The shaft 47 is pivotally mounted by means of bearings 48 on the frame 24 and it has rigidly mounted thereon a long upwardly extending arm 49 which is oscillated each time the handle 35 is moved.

The handle 35 carries a formation 50 which is adapted to engage the rear end of an arm 51 pivotally mounted on the frame 24. The arm 51 is biased rearwardly by a spring 52 and is provided with a recess 53. If the handle is moved downwardly the spring 52 tends to move the arm 51 rearwardly, with the result that the projection 50 on the arm 35 enters the recess 53 on the arm 51 before the pawl 39 engages the teeth on

the sector 38. Consequently, it is normally impossible to move the arm 35 downwardly.

The arm 51 is pivotally connected by means of a pin and slot connection to a lever 54 which is pivoted to the frame 24 at 55. The upper end of the lever 54 engages an adjustable stop 56 carried by a lever 57 in the upper part of the machine. It will readily be understood that when the lever 57 is held in the position shown in Fig. 2, which occurs in a manner hereinafter to be described, then the handle 35 may be moved downwardly.

When the merchandise is exhausted, the plate 22 is adapted to move upwardly. The plate 22 carries an upwardly projecting pin 58 which is thus brought into the path of the dispensing plate 28 and, consequently, prevents the rearward movement of that plate. On the forward side of the merchandise tube 21 is slidably mounted a plate 59 which is adapted to drop, under certain conditions, into the path of the plate 28 so as to prevent dispensing movement thereof.

The plate 59 is normally held in the position shown in Fig. 2 by a lever 60 pivotally mounted on the frame 24. The forward end of the lever 60 is provided with a slot 61 through which passes a pin 62 carried by an arm 63 which is pivoted on the frame 24. The arm 63 is biased forwardly by means of a spring 64 and the lever 60 is bent at an angle, as shown in Fig. 2, so that the forward movement of the arm 63 causes the plate 59 to move downwardly. The arm 63 is normally prevented from moving forwardly in this manner by engagement with an abutment 65 carried at the lower end of a lever 66 which is mounted in the upper part of the machine. The upper end of the arm 63 and the upper end of the lever 54 may be guided in suitable slots (not shown) in a bracket 67 mounted on the frame 24.

When the plate 22 moves upwardly owing to the absence of merchandise, in the manner heretofore described, a bar 68 is pushed upwardly. The upper end of the bar 68 engages one end of a lever 69.

The upper part of the machine comprises a supporting plate 70 which is rigidly mounted on the frame 24 by a bracket 71, a flange 72, and a bracket 73. The plate 70 is located at a small angle to the vertical in order that the window 74 in the front of the housing and three handles 141 may be seen and operated with facility. Through the window 74 is seen three coin display discs 76, each of which is provided with seven coin-receiving pockets. These discs operate within circular beaded frames 77 which prevent the coins from moving radially except when such movement is desired.

Mounted upon the plate 70 is a plate 78, portions of which are in spaced relation to the plate 70 so as to provide chutes and passageways for the coins. Integral with the cover plate 78 are three cylindrical coin-receiving formations 79 which project forwardly through the front housing, as shown in Fig. 6. The plate 70 is provided with bead formations for the purpose of defining coin chutes, there being one coin chute for each of the three coin-receiving openings 79. Thus, the plate 70 may carry beaded portions 80 and 81 which define a coin chute which slopes downwardly from the position of the inlet 79 towards the right. The coin chute 82 thus provided delivers the coin into a coin chute 83 which slopes in the opposite direction, that is, to the left and downwardly, this coin chute being formed by an upper beaded formation 84, the lower beaded formation 85, and a flange 86 which projects forwardly above the level of the beaded formations.

The beaded formation 84 extends around a pocket 87 in which is located a horseshoe magnet 88. Between the horseshoe magnet 88 and the left-hand extremity of the flange 86 the coin is free to drop into a chute 89 which extends to the right and a chute 90 which extends to the left. The chute 89 is constituted by beaded formations 91 and 92 which merge with the circular beaded formations 77 previously referred to.

The chute 90 is constituted by beaded formations 93 and 94 and any coin passing into this chute is delivered through an opening 95 in the plate 70. It will be understood that the beaded formations just described are duplicated for the mechanisms for receiving all three coins.

The plate 70 also carries beaded formations 96 and 97. It must be understood that all these beaded formations are of uniform height. Consequently, the coin chutes referred to are completed by securing the flat plate 78 to the plate 70 so that it rests on said beaded formations. The plate 78 is provided with openings 98 which align with the coin display discs 76. These openings are somewhat smaller in diameter than the interior diameter of the circular formations 77. Consequently, the adjacent portions of the plate 78 around the openings 98 constitute a peripheral flange which prevents coins from being displaced upwardly out of the pockets of the coin display discs.

The coin display discs 76 are provided with central bosses and these bosses are provided with radially directed projections 99 which are adapted to overlie coins in the pockets of the display discs and prevent the accidental displacement of the coins in the forward direction.

The plate 70 is provided with three openings 100 in alignment with the entering positions of the coins. The rear wall of the housing 20 is provided with openings 101 (Fig. 2) in alignment with the openings 100 so that in the event a coin gets stuck in any of the coin receivers 79, a suitable punch may be introduced by the opening 101 to displace the coin.

Along each chute 83 the plate 70 is provided with an opening 102 through which may fall undersized coins. The opposite ends of the opening 102 are beveled, as shown at 103 (Fig. 14). Along the lower edge of the chute 83 at an intermediate point of the opening 102 the plate 70 is provided with a wedge-shaped projection 104 which insures that a coin will lean backwards and if it is of the correct size, it will bear against the upper part of the coin chute 83 provided by the plate 70. Consequently, a coin which is of insufficient diameter will be caused to fall through the opening 83 into a trough 105. When passing the zone of the projection 104, the lower edge of the coin runs upon the flange 86 previously referred to.

The plate 78 is provided with a pocket 106 to enable the coin to pass the projection 104. At the entrance of the chute 89 the plate 70 is provided with a slot 107 through which is adapted to extend the forwardly turned end 108 of a light lever 109. The lever 109 is pivotally mounted on a pin 110 which extends through the webs of a U-shaped bracket 111 mounted on the rear of the plate 70.

The pin 110 is provided at one end with a laterally turned loop 112 whereby the pin 110 may be held against displacement by the screw 113.

The lower end of the lever 109 is free to swing within a slot 114 in the plate 70, which slot is located in the coin chute 89. The slot 114 communicates with an arcuate slot 115, the purpose of which will hereinafter be described. The lower portion of the lever 109 is bent laterally and it normally extends into the coin chute 89, the plate 78 being provided with a forwardly pressed formation 116 for its accommodation.

At its lower end the lever 109 carries a forwardly projecting portion 117 which is also adapted to extend through the plate 78 adjacent the opening 98. The projection 117 is adapted to be engaged by a coin in the pocket of the display disc 76 in coin-receiving position. Consequently, while there is a coin in the display disc 76 at that position, the inturned end 108 is displaced into the coin chute 89 so that a further coin is prevented from entering. If a coin is inserted in the coin-receiving opening 79 while a coin is in the coin-receiving position of the display disc 76, the second coin will roll over the projecting portion 108 and will be delivered through the opening 95 from which it passes by the manifold chute 118 to a return cup 119.

The plate 70 is provided with two slots 120 and 121 within which are movably mounted the pins 122 and 123, respectively. The pins 122 and 123 normally have the position in which they are shown in Fig. 7. When in this position they are adapted to arrest a coin and it may be noted that the coin thus arrested is in contact with the lever 109 so that the projection 108 is moved into the chute 89. In register with the coin-receiving pocket of each coin display disc 76, the plate 70 is provided with openings, through which are adapted to extend pins 124 and 125. The pin 124 is located at the center of a coin in the receiving position. The pin 125 is located adjacent a marginal portion of the coin in coin-receiving position.

The coin-receiving discs are adapted to be rotated step by step in the counter-clockwise direction as viewed from the front of the machine, that is, as viewed in Fig. 7. At the position to the right of the coin-receiving position, the plate 70 is provided with an opening 126 through which coins carried around by the display disc are adapted to fall into coin chutes 127, 128 and 129.

In some cases it is desirable to provide for the employment of authorized tokens as well as coins. Thus, the right-hand display disc as viewed in Fig. 7, that is, the nickel or 5¢ display disc, is adapted for use with nickels or with tokens of a certain limited magnetic quality. Such tokens may, for example, be formed of bronze or the like, but provided with a central core of magnetic metal. This core is not of sufficient mass that the coin is deflected by the magnet 88 from the coin chute 89 into the coin chute 95, as is the case with a ferrous slug. Nevertheless, the mass of the magnetic core is such that it is attracted by a magnet 130.

Below the magnet is provided a chute 131 into which genuine coins pass. The chute 131 delivers into a chute 132 into which also deliver the chutes 127 and 128. The chute 132 extends downwardly to the cash box 133 at the bottom of the machine.

The special tokens being held by the magnet 130 are carried around by the display disc 76 and eventually are discharged through the appropriate opening 126 in the plate 70. These tokens fall into chutes 129 and 134 which extend in separate sections downwardly to a token box 135 in the bottom of the machine. In case it is desired to employ tokens which have a very small opening in their center and at the same time prevent the delivery of merchandise for a spurious token with a large opening in its center, we may employ a stepped pin 124', as shown in Fig. 5 instead of the round pins 124 shown in connection with the other coin display discs.

Upon the plate 78 is pivotally mounted an arm 136, one for each coin-receiving opening, which carries a stud 137 which extends through an arcuate slot 138 in the plate 78, through the coin chute 89, and into the slot 115 which is in alignment with the slot 138. In normal condition the arm 136 is in the position shown in Fig. 3 and the stud 137 is located in the position shown in Fig. 7, that is, immediately above the chute 89. The arm 136 is held in this position by a spring 139. The arm 136 carries a forwardly extending stud 140 whereby it may be moved downwardly. It is thus moved downwardly when a coin is supported on the two pins 122 and 123 and the stud 137 then engages the coin and forces it downwardly past the pins 122 and 123 into the coin-receiving position in the coin display disc.

This downward movement is effected by means of a handle 141 located on the exterior of the housing 20. The handle 141 is rotatably mounted on the housing by means of a shaft 142. The inner end of the shaft 142 is flattened to receive in rigid relation the boss of an arm 143. The arm 143 is held on the shaft 142 by means of a washer 144 and screw 145.

The arm 143 is adapted to engage the stud 140. When not actuated by the handle 141 the arm 143 is in the position shown in Fig. 11, being moved to that position by a spring 146 and by the action of the spring 139 which moves the associated arm 136 upwardly. The spring 146 is anchored to a suitable bracket 147 mounted on the inner side of the housing 20. This bracket serves as a support for a rubber abutment 148 which is adapted to engage an abutment 149 on the boss of the arm 143 so as to limit the movement of the handle 141.

The pin 123 is carried by a bell crank lever 75 mounted on the forward side of the plate 78 and it extends through a slot 150 in the plate 78 in alignment with the slot 121. The bell crank lever 75 is biased by a spring 151 so that the pin 123 is normally in its innermost position, in which it assists in arresting a coin passing downward through the chute 89. When the handle 141 is actuated and the pin 137 moves downwardly in the slot 115, the coin forces the pin 123 outwardly against the tension of the spring 151. At the same time the pin 122 is moved outwardly.

The pin 122, which extends from the rear through the slot 120 in the plate 70 and through a registering slot 152 in the plate 78, is carried by a forked lever 153 pivotally mounted on the back of the plate 70. The lever 153 is biased by a spring 154 so that the pin 122 is located in its innermost position with respect to the chute 89, that is, the position shown in Fig. 7. It will readily be understood that when a coin is forced down the chute 89 by the pin 137, the forked lever 153 is swung to the right as viewed in Fig. 8, this being a view looking from the rear of the machine.

On the rear side of the plate 70 are mounted three leaf springs 155 which extend past the upper portion of the slot 115 in which rides the

pin 137. When the pin 137 moves upwardly to the position in which it is shown in Figs. 7 and 8, it engages the cam portion 156 (Fig. 15) and moves the spring away from the plate 70. This movement of the spring enables the upper part of the lever 109, that is, the part which carries the projecting end 108, to withdraw from the chute 89, the lever 109 being provided with a weight 157 to effect this result.

When a coin enters the chute 89 it is arrested by the pins 122 and 123. In moving to this position of arrestment the coin engages the forward knee-like portion of the lever 109 (Figs. 10 and 13) and causes its upper end 108 to project into the chute 89. The downward movement of the pin 137 moves the coin into the coin-receiving position of the display disc 76. When the handle 141 is released, the pin 137 moves into its initial position and moves the spring 155 away from the lever 109. The projection 108 remains in the chute 89 until the coin display disc is rotated one step, whereupon the projection 108 moves completely out of the coin chute 89 to enable the same to receive an additional coin.

The coin display disc 76 is rigidly mounted on a shaft 158 which has a front bearing in the plate 70 and a rear bearing in the bracket 159 supported on a structure built up from the rear of the plate 70. Two adjacent ratchet wheels 160 and 161 are rigidly mounted on the shaft 158 (Fig. 10). These ratchets may be formed integrally upon a hub 162 whereby they may be easily attached rigidly to the shaft 158.

Behind the ratchet wheels 160 and 161 a third ratchet wheel 163 is mounted on the shaft 158 for free rotation. The ratchet wheel 163 is provided with a hub 164 to which is anchored a spring 165. This spring extends partly around the hub and is anchored to a stationary part of the machine so that it always tends to rotate the ratchet wheel 163 in counter-clockwise direction as viewed in Fig. 9. Also freely mounted on the shaft 158 is the boss 166 of a lever 167, best shown in Fig. 4. The lower end of the three levers 167 are pivotally connected to a bar 168 (Fig. 4) which is normally held in the position shown in Fig. 4 by a spring 169.

The bar 168 pivotally carries a dog 170 which is biased by gravity, or otherwise, downwardly into the path of the arm 49. When the arm 49 moves to the right, as viewed in Fig. 4, which occurs on the down stroke of the dispensing handle 35, the arm 49 moves the dog 170 out of its way. However, when the arm 49 moves to the left, as viewed in Fig. 4, which corresponds to the return or upward movement of the dispensing handle 35, the arm 49 forces the dog 170 against an abutment 171 and, consequently, the bar 168 is moved to the left (Fig. 4).

When the arm 49 clears the dog 170, the spring 169 returns the bar 168 to its normal position. Consequently, the lever 167 is displaced in a clockwise direction (Fig. 4) during each return stroke of the dispensing handle 35 and the lever returns to its normal position during said return stroke.

A dog 172, pivotally mounted on a frame plate 173 which is carried from the plate 70, is biased by a spring 174 so that it engages the teeth of the ratchet wheel 163, as shown in Figs. 4 and 9. On its forward side the dog 172 carries a pin 175 which lies in the path of the longer of the two arms of the bifurcated lever 153. Consequently, when this lever is displaced by the downward movement of a coin past the pin 122, the longer arm of the lever engages the pin 175 and displaces the dog 172 from the teeth of the ratchet wheel 163. A dog 178, also pivotally mounted on the plate 173, cooperates with the teeth of the ratchet wheel 160 so as to prevent rotation of the ratchet wheels 160 and 161, the shaft 158, and the coin display disc 76, except in the clockwise direction as viewed in Fig. 9, or the counter-clockwise direction as viewed from the front of the machine.

The dog 178 is biased into engagement with the ratchet wheel 160 by means of a stout spring 179. The three ratchet wheels 160, 161 and 163 have the same number of teeth, but they are of different sizes, as is best seen in Fig. 9. One recess, indicated at 180, of the ratchet wheel 163 is sufficiently deep so that it extends into alignment with the recesses of the ratchet wheel 161. The other tooth recesses of the ratchet wheel 163 extend only to points located outwardly of the highest points on the ratchet wheel 161. A dog 181 is pivotally mounted on the lever 167. This dog is biased towards the ratchet wheel 163 by a spring 182.

The shorter arm of the bifurcated lever 153 carries a rearward projection 183 which is adapted to engage the dog 181 when the bifurcated lever is displaced in the counter-clockwise direction as viewed in Fig. 9, that is, when a coin is forced down the chute 89. Consequently, this displacement of the bifurcated lever 153 elevates the dogs 181 and 172 away from the ratchet wheel 163, with the result that the spring 165 rotates this ratchet wheel in the counter-clockwise direction as viewed in Fig. 9, until a stop 176 mounted on the ratchet wheel engages a rigid stop 177.

The longer arm of the bifurcated lever 153 carries a pin 184 which extends rearwardly through a slot 185 in the plate 173. When the lever 153 is displaced to the right, as viewed in Fig. 9, a detent 186 on a dog 187, which is pivotally mounted on the plate 173, moves down behind the pin 184 so that the dogs 172 and 181 are maintained out of contact with the ratchet wheel 163 until such time as the dog 187 is again elevated. The dog 187 is biased downwardly by a spring 188.

It may here be noted that the dog 186 is provided with a rearwardly projecting portion 189 which is adapted to be engaged by an arm 190 rigidly carried by the shaft 43. It will, of course, be understood that three such arms 190 are provided on the shaft 43 for engagement with the dogs 187 of the three coin units. The shaft 43 is rotated immediately the handle 35 is moved downwardly and, consequently, at that time the dogs 181 and 172 are free to engage the ratchet wheel 163. During the return stroke of the handle 35 the lever 167 is oscillated and the oscillation of the dog 181 has the effect of rotating the ratchet wheel 163 through the distance of one tooth.

The mechanism shown in Fig. 9 appertains to the 25¢ coin slot and, consequently, it is set for five operations of the handle 35. When the stop 176 is in engagement with the stop 177 the detent 191 of the dog 181 is adapted to engage the tooth 192 (Fig. 9) of the ratchet wheel 163. Consequently, the first four oscillations of the handle 35 will have the effect of rotating the ratchet wheel 163 four steps in the clockwise direction, as viewed in Fig. 9. At the completion of the fourth oscillation the detent 191 will fall into the large recess 180 in the ratchet wheel 163 and, consequently, it will descend into the aligned recess of the ratchet wheel 161. Thus, on the last

stroke, not only is the ratchet wheel 163 rotated one step, but also the ratchet wheel 161. At the end of this oscillation the dog 181 is raised out of engagement with all ratchet teeth by means of a formation 193 on the ratchet wheel 163, which formation replaces the normal tooth position.

It will be understood that the number of oscillations of the dispensing handle 35, which are necessary for the cooperation of the detent 191 with the large recess 180 of the ratchet wheel 163, depends upon the relation between the position of the stop 176 and the large recess 180 on the ratchet wheel 163. The positions for the stops 176 for 1, 2 and 5 actuations of the handle 35 are shown on Fig. 4.

When the merchandise in the machine is exhausted, the bar 68 is moved upwardly and swings the lever 69 (Fig. 4) in the clockwise direction. The lever 69 is pivotally mounted at 194 on the plate 173. At its upper end the lever 69 carries a forwardly bent cam portion 195. The cam portion 195 engages an arm 196 which is rigidly mounted on a shaft 197 which extends across the machine behind the plate 70, being mounted on brackets 198 carried thereby.

The shaft 197 carries three radially projecting pins 199 which are adapted, under certain circumstances, to engage the three levers 109. The shaft 197 is biased by a spring 200 (Fig. 6) which is connected to an arm 201 rigidly mounted on one end of the shaft 197. When the upper part of the lever 69 is displaced to the right, as viewed in Fig. 4, the shaft 197 is rotated slightly in the counter-clockwise direction as viewed in Fig. 6, with the result that the pins 199 engage the levers 109 and project the forwardly turned portions 108 thereof into the coin chutes 89. Consequently, when the machine is empty of merchandise, coins inserted at the openings 79 will not be accepted by the machine, but will be returned to the customer at the outlet 119.

The two levers 57 and 66 are rigidly mounted on the ends of two shafts 202 and 203 which extend across the machine behind the plate 70, being pivotally mounted in the brackets 198 which also support the shaft 197 immediately in front of the shaft 203. The shaft 202 has rigidly mounted thereon three arms 204, to each of which is pivotally connected one of the pins 125 previously referred to.

In their normal position the pins 125 are located flush with the plate 70. If there is a coin in the coin-receiving position of one of the coin display discs, the pin 125 will be prevented from moving forwardly when the handle 35 is depressed. Consequently, the lever 54 will be held in the position in which it is shown in Fig. 2, and the arm 51 will not be permitted to move rearwardly. Consequently, the handle 35 may be moved downwardly without the projection 50 entering the recess 53 which would prevent the downward movement.

The shaft 203 rigidly carries three downwardly depending arms 205 to which are pivotally connected the three pins 124 or 124', as the case may be. These pins have their forward extremities normally flush with the plate 70.

The two levers 57 and 66 are drawn rearwardly by springs 206 so that the bolts 56 and 65 carried thereby abut against the levers 54 and 63, respectively. Adjacent its pivot the arm 63 carries a forwardly projecting arm 207 which is connected by a spring 208 to the hand lever 35. When the hand lever is in its upward position, that is, the position shown in Fig. 2, the spring 208 is not under tension. When the handle 35 is moved downwardly, the spring 208 becomes tensioned and the force applied to the arm 63 is sufficient to swing the lever 66 forwardly or to tend to do so. If there is a hole in the coin or if there is a large hole in the case of a token in the third coin unit, the arm 63 moves forward to such an extent that the plate 59 is moved downwardly and, consequently, the rearward movement of the dispensing plate 28 is prevented.

Means are preferably provided to prevent the machine from being tilted in an effort to cheat it by employing thin coins or tokens. Thus, we may mount a pendulum 209 which is adapted, when the machine is tilted forwardly, to engage a pin 210 carried by an arm 211, which is rigidly carried by the shaft 197. It will readily be understood that when the machine is tilted forwardly the shaft 197 is rotated in counter-clockwise direction, as viewed in Fig. 6, and the pins 199 engage the lever 109, as shown in Fig. 13, and move this lever in the counter-clockwise direction as viewed in that figure, so as to introduce the projecting portion 108 into the slot 89.

The operation of the device will be fully understood from the foregoing description. If a quarter is inserted in the first or left-hand coin-receiving opening 79, and the appropriate handle 141 is operated to force the coin from the coin chute 89 into the coin display disc, then the handle 35 may be actuated five times for the discharge of five packages of merchandise. When a dime is inserted in the second coin-receiving opening 79 and the appropriate handle 141 is operated, the handle 35 may be actuated twice to dispense two packages of merchandise. When a nickel or an authorized token is inserted in the third coin-receiving opening 79 and the appropriate handle 141 is operated, the handle 35 may be operated once only.

Although the invention has been disclosed in connection with the specific details of a preferred embodiment thereof, it must be understood that such details are not intended to be limitative of the invention except insofar as set forth in the accompanying claims.

Having thus described our invention, what we claim as new and desire to secure by Letters Patent of the United States is:

1. A coin released mechanism comprising ratchet means, means biasing said ratchet means to an initial position, pawl means for moving said ratchet means into another position, further pawl means for holding said ratchet in last said position, coin actuated means for releasing said pawl means, manually operated means, means including first said pawl means actuated by said manually operated means for moving said ratchet means step by step from said initial position, and means actuated by said manually operated means at a predetermined number of actuations for rendering said manually operated means inoperable.

2. A coin released mechanism comprising ratchet means, means biasing said ratchet means to an initial position, pawl means for moving said ratchet means into another position, further pawl means for holding said ratchet in last said position, coin actuated means for releasing said pawl means, manually operated means, means including first said pawl means actuated by said manually operated means for moving said ratchet means step by step from said initial position, and means controlled by said ratchet means and actuated by said manually operated means whereby the actuation of said manually operated

means for a predetermined number of times renders said manually operated means inoperable.

3. A coin released mechanism comprising ratchet means, means biasing said ratchet means to an initial position, pawl means for moving said ratchet means into another position, further pawl means for holding said ratchet in last said position, coin actuated means for releasing said pawl means, manually operated means, means including first said pawl means actuated by said manually operated means for moving said ratchet means step by step from said initial position, and means operable by last said means in a predetermined position of said ratchet means whereby the manually operated means is rendered inoperative.

4. A coin released mechanism comprising ratchet means, means biasing said ratchet means to an initial position, pawl means for moving said ratchet means into another position, further pawl means for holding said ratchet in last said position, coin actuated means for releasing said pawl means, manually operated means, a latch normally operable to prevent actuation of said manually operated means, means for holding a coin at a certain position, means controlled by a coin at said position for preventing the operation of said latch, means including first said pawl means and actuated by said manually operated means for moving said ratchet means step by step from said initial position, and means operable by last said means in a predetermined position of said ratchet means for moving the coin from its said position.

5. A coin released mechanism comprising a ratchet wheel, means biasing said ratchet wheel to an initial position, pawl means for moving said ratchet wheel into another position, further pawl means for holding said ratchet in last said position, coin actuated means for releasing said pawl means, manually operated means, a latch normally operable to prevent actuation of said manually operated means, means for holding a coin at a certain position, means controlled by a coin at said position for preventing the operation of said latch, means including first said pawl means and actuated by said manually operated means for moving said ratchet wheel step by step from said initial position, and a ratchet wheel adapted to carry said coin from its said position, last said ratchet wheel being smaller than and co-axial with the first said ratchet wheel, the first said ratchet wheel having an enlarged recess at one position, whereby the first said pawl means in that position is enabled to engage and operate the second said ratchet wheel.

6. A coin released mechanism comprising ratchet means, means biasing said ratchet means to an initial position, pawl means for moving said ratchet means into another position, further pawl means for holding said ratchet in last said position, manually operable means whereby a coin is caused to free said pawl means, a second manually operable means, means including first said pawl means and actuated by said second manually operable means for moving said ratchet means step by step from said initial position, and means actuated by said second manually operable means at a predetermined number of actuations for rendering said second manually operable means inoperative.

7. A coin released mechanism comprising a plurality of coin chutes adapted to receive coins of different denominations, a ratchet means associated with each coin chute, means biasing each of said ratchet means to an initial position, pawl means for moving said ratchet means into another position, further pawl means for holding said ratchet in last said position, coin controlled means associated with each chute whereby the associated pawl means may be released, a manually operable member adapted on actuations to move said ratchet means stepwise from initial position, and means on each ratchet means for rendering the manually operable member inoperative when the ratchet means has been moved to a predetermined position by actuation of the manually operable member.

8. A coin released mechanism comprising a plurality of coin chutes adapted to receive coins of different denominations, a ratchet means associated with each coin chute, means biasing each of said ratchet means to an initial position, pawl means for moving said ratchet means into another position, further pawl means for holding said ratchet in last said position, coin controlled means associated with each chute whereby the associated pawl means may be released, a manually operable member adapted on successive actuations to move said ratchet means stepwise from initial position, a latch normally preventing actuation of said manually operable means, coin controlled means associated with each chute for rendering said latch inoperative, and means associated with each ratchet means for rendering said latch operative after said manually operable member has been actuated for a predetermined number of times.

9. A coin released mechanism comprising a plurality of coin chutes adapted to receive coins of different denominations, a ratchet wheel associated with each coin chute, means biasing each of said ratchet wheels to an initial position, pawl means for moving said ratchet wheel into another position, further pawl means for holding said ratchet in last said position, coin controlled means associated with each chute whereby the associated pawl means may be released, a manually operable member adapted on successive actuations to move said ratchet wheel stepwise from initial position, and means controlled by means including said ratchet for preventing operation of said manually operable member after a predetermined number of actuations.

10. A coin released mechanism comprising a plurality of coin chutes adapted to receive coins of different denominations, a ratchet wheel associated with each coin chute, means biasing each of said ratchet wheels to an initial position, pawls adapted to move and hold said wheels to and in other positions, coin controlled means associated with each chute whereby the associated pawls may be released and the associated wheel released to initial position, a manually operable member adapted to actuate one of said pawls on successive actuations to move any released ratchet wheel stepwise from initial position, and means controlled by means including said ratchet for rendering said manually operable member inoperative.

11. A coin released mechanism comprising a plurality of coin chutes adapted to receive coins of different denominations, ratchet wheel means associated with said coin chutes, means biasing said ratchet wheel means in one direction, pawl means adapted to move and hold said ratchet wheel means to and in several positions, coin controlled means associated with each chute whereby the associated pawl means may be released to permit movement of said ratchet wheel means

in said direction, stop means limiting the movement of said ratchet wheel means to an extent depending on the denomination of said coin, manually actuated means, means actuated thereby for moving said ratchet wheel means stepwise as the manually actuated means is operated, and means associated with said ratchet wheel means for rendering inoperative last said means for moving said ratchet wheel means.

12. A coin released mechanism comprising a plurality of coin chutes adapted to receive coins of different denominations, ratchet wheel means associated with said coin chutes, means biasing said ratchet wheel means in one direction, pawl means adapted to move and hold said ratchet wheel means to and in several positions, coin controlled means associated with each chute whereby the associated pawl means may be released to permit movement of said ratchet wheel means in said direction, stop means limiting the movement of said ratchet wheel means to an extent depending on the denomination of said coin, manually actuated means, means actuated thereby for moving said ratchet wheel means stepwise as the manually actuated means is operated, means associated with said ratchet wheel means for rendering said manually actuated means inoperable, and means on said ratchet wheel means for rendering inoperative the means for moving said ratchet wheel means.

13. A coin released mechanism comprising a plurality of coin chutes adapted to receive coins of different denominations, ratchet wheel means associated with said coin chutes, means biasing said ratchet wheel means in one direction, pawl means adapted to move and hold said ratchet wheel means to and in several different positions, coin controlled means associated with each chute whereby the pawl means may be released to permit movement of said ratchet wheel means in said direction, stop means limiting the movement of said ratchet wheel means to an extent depending on the denomination of said coin, manually operable means, means for holding said coins in certain positions, means adapted to cooperate with a coin in said position and actuated by said manually operable means, means controlled by said cooperating means for controlling the movement of said ratchet wheel means stepwise by the manually actuated means, means associated with said ratchet wheel means for removing said coin from said position and thereby rendering said manually actuated means inoperable, and means on said ratchet wheel means for rendering inoperative the means for moving said ratchet wheel means.

14. A coin released mechanism, comprising a plurality of coin chutes adapted to receive coins of different denominations, a coin display disk having a plurality of coin receiving pockets associated with each chute, a ratchet wheel associated with each of said chutes, means biasing each ratchet wheel in one direction, pawl means adapted to hold said ratchet wheels against displacement in said direction, coin controlled means associated with each pawl whereby the associated ratchet wheel may be released by a coin passing to a coin display disk, stop means limiting the movement of said ratchet wheel to an extent depending on the denomination of said coin, means adapted to engage a coin in any of said disks at the coin receiving position thereof, means including a pawl cooperating with each of said ratchet wheels, manually operable means for moving any of said ratchet wheels thus released stepwise as the manually actuated means is operated, means controlled by said coin-engaging means for permitting said actuating means to actuate said pawl, means associated with each ratchet wheel for moving the associated coin display disk to carry the controlling coin from coin receiving position, and thereby rendering said manually actuated means inoperable, and means on each ratchet wheel for rendering the associated one of last said actuating pawls inoperative.

SIDNEY E. VAN TUYL.
EMERY MIHALEK.
CHARLES SZYPER.