June 21, 1955 J. ROTHSTEIN 2,711,379

METHOD OF CONTROLLING THE CONCENTRATION OF IMPURITIES IN SEMI-CONDUCTING MATERIALS

Filed Aug. 4, 1952

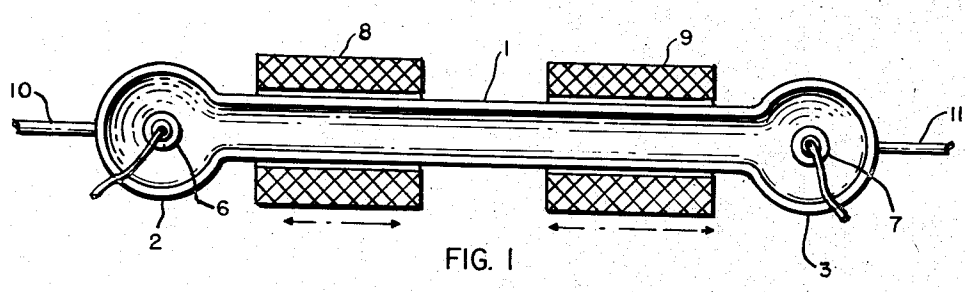

FIG. 1

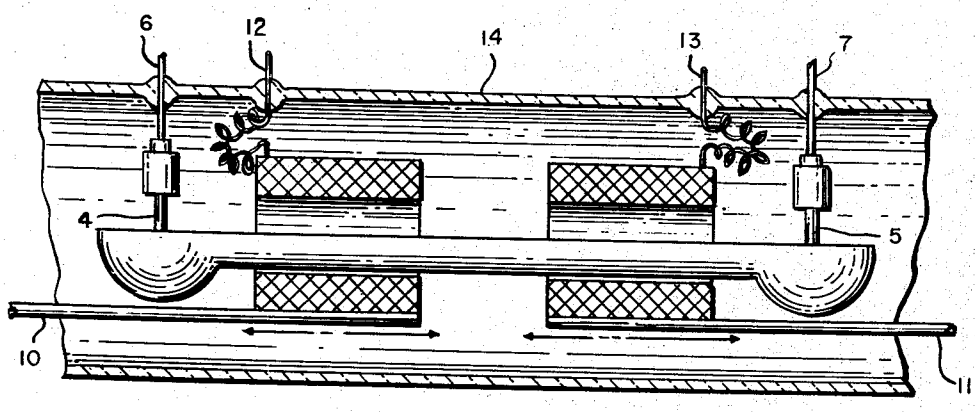

FIG. 2

INVENTOR.

JEROME ROTHSTEIN

BY Lawrence Glaserman

ATTORNEY

United States Patent Office 2,711,379
Patented June 21, 1955

2,711,379

METHOD OF CONTROLLING THE CONCENTRATION OF IMPURITIES IN SEMI-CONDUCTING MATERIALS

Jerome Rothstein, Belmar, N. J., assignor to the United States of America as represented by the Secretary of the Army

Application August 4, 1952, Serial No. 302,639

3 Claims. (Cl. 148—1.5)

(Granted under Title 35, U. S. Code (1952), sec. 266)

The invention described herein may be manufactured and used by or for the Government for governmental purposes without the payment of any royalty thereon.

This invention relates to methods of controlling the concentration of impurities in semi-conducting materials such as germanium, silicon, and other materials.

Purification of germanium, silicon and other high resistivity materials to the degree needed in semi-conductive work is very difficult to attain. Even traces undetectable chemically may have decisive effects on the electrical properties of semi-conductors. Heretofore the approach has been essentially that of chemical purification followed by crystallization techniques.

The present invention contemplates purification of semi-conducting material by electrolyzing the materials whereby donor type impurities, which bear an effectively positive charge, will migrate toward the cathode, while acceptor type impurities, which bear an effectively negative charge will migrate toward the anode. N-type material will thus form around the anode, P-type around the cathode, with exceptionally pure material in between.

The invention and its objects will be illustrated by the following description of specific embodiments taken in connection with the accompanying drawing wherein Fig. 1 shows a top view of a crucible for melting the germanium with the heating coils shown in horizontal sectional view and Fig. 2 a vertical sectional view of the assembled apparatus.

Germanium is heated to about its melting point which is 959° C. It is desirable to approach or exceed the melting point so as to get sufficient mobility of the impurity ions. Exceeding the melting point is advantageous in that the mobility is greater in the liquid state than in the solid. However, the disadvantage of going to very high temperatures is that impurities begin to diffuse into the melt from the container.

The use of electrolysis for the purpose of controlling the concentration of impurities is not obvious because semi-conductors conduct electronically, rather than ionically. Even under the conditions that exist in the above mentioned melt most of the current may be carried by electrons or holes (or both). At the temperatures contemplated, however, the lattice structure of the solid is broken down either by melting or by generation of lattice defects below the melting point to such a high degree that atoms and ions become quite mobile whereby the charged impurities can drift under the influence of an applied electric field.

The apparatus shown in Figs. 1 and 2 of the drawing uses an elongated shallow quartz crucible **1** having enlarged and deepened ends **2** and **3** into which pure carbon electrodes **4** and **5** are dipped. The germanium in the immediate vicinity of the electrodes is cool and solid because of thermal loss thru the inserted carbon electrodes. The carbon electrodes **4** and **5** are preferably held by water-cooled holders **6** and **7** to insure cooling of the parts of the metal in the neighborhood of these carbon electrodes. This prevents diffusion of impurities from

the electrodes **4** and **5** into the material to be purified. A potential difference between the electrodes must be maintained which is large compared to thermal energies at the temperature of operation (measured in electron volts) divided by the charge on an electron. Four or five volts is more than ample. The higher potential difference, the greater the speed and efficacy of electrolysis. The electrolysis is continued until the ions have been swept into the enlarged regions **2** and **3** which contain the electrodes leaving a very small concentration of impurities in the region in between.

The high temperature needed to melt the material may be obtained by radio frequency heating or by the use of conventional heating coils **8** and **9** surrounding the crucible **1** or by other conventional arrangements.

After finishing the electrolysis, in the event that material has been melted, cooling is started by first cooling the central region of the melt which contains the pure material before cooling the parts near the electrodes where the impurities gather. Otherwise the crystallization forces would push the impurities back into the purified region. This selective cooling may be accomplished in various ways for instance by making the heating coils **8** and **9** slidable in a horizontal direction (not shown in the drawing) and by pulling these coils with the aid of rods **10** and **11** toward the electrodes after the electrolysis is finished.

To prevent oxidation of the heated material the electrolysis may be carried out in vacuo or in an inert atmosphere. For this purpose the crucible **1** is inserted into a tube **14** of an appropriate material such as quartz glass. The water-cooled holders **6** and **7** and the wiring **12** and **13** for the heating coils **8** and **9** are hermetically sealed into the walls of the tube **14**. The ends of tube **14** (not shown in the drawings) are closed and connected in well known manner with the necessary implements for supplying either high vacuum or an inert atmosphere.

A way of circumventing contamination of molten semiconducting material by the container is for the molten portion to be surrounded by a solid cooled outer portion whereby the outer cooler and solid portion of the material (such as silicon or germanium) act as the container for the inner molten portion. A convenient way of accomplishing this is to heat the material directly by the electrolyzing currents or by radio frequency heating.

By carrying the electrolysis as far as possible, that is, until no further change occurs one can obtain regions of N-type and P-type material around the electrodes and a pure material in the central region. If, however, electrolysis is stopped at an intermediate point materials with various distributions of donor and acceptor type impurities and materials with various degrees of purity will be obtained.

A particular advantage of the present invention over the known purification by crystal growing methods consists in the fact that very large batches of semi-conducting material may be purified. The amounts to be purified with the aid of electrolysis are limited only by the power available.

What is claimed is:

1. Method of controlling the concentration of impurities in semi-conducting materials comprising submitting a material selected from the group consisting of germanium and silicon to the action of an electric field in the presence of spaced anode and cathode at a temperature that brings about sufficient mobility of the impurity ions whereby donor type impurities migrate toward the cathode, while acceptor type impurities migrate toward the anode, continuing the treatment until material of the desired degrees of purity and impurity is obtained, and selectively cooling the material by first cooling the central region that con-

tains the desired degree of purity before cooling the parts near the electrodes.

2. Method of controlling the concentration of impurities in semi-conducting materials according to claim 1 in which the material is heated in an inert atmosphere to about its melting point.

3. Method of controlling the concentration of impurities in semi-conducting materials according to claim 1 in which an inner portion of the material is heated whereby the outer cooler portion of said material acts as the container for the inner molten portion.

References Cited in the file of this patent

UNITED STATES PATENTS

3,698	Wall	Aug. 10, 1844
800,984	Chance	Oct. 3, 1905