(12) INTERNATIONAL APPLICATION PUBLISHED UNDER THE PATENT COOPERATION TREATY (PCT)

(19) World Intellectual Property Organization
International Bureau

(43) International Publication Date
6 June 2013 (06.06.2013)

W I P O | P C T

(10) International Publication Number
WO 2013/080211 Al

(51) International Patent Classification:
G06Q 10/00 (2012.01) *B60L 11/00* (2006.01)

(21) International Application Number:
PCT/IL20 12/050490

(22) International Filing Date:
29 November 2012 (29.1 1.2012)

(25) Filing Language: English

(26) Publication Language: English

(30) Priority Data:
61/566,529 2 December 201 1 (02. 12.201 1) US

(71) Applicant: BETTER PLACE GMBH [CH/CH]; Industriestrasse 13C c/o Hodel Advokatur, + Notariat, CH-6304 Zug (CH).

(72) Inventor; and
(71) Applicant *(for VC only):* HEICHAL, Yoav [IL/IL]; 4 Hanarkis Street, 56905 Ganey Yehuda (IL).

(72) Inventors: HERSHKOVITZ, Barak; 4 1 Hanoter St., 40500 Even Yehuda (IL). AGASSI, Shai; 45 HaZorea Street, 46910 Kfar Shemaryahu (IL).

(74) Agent: REINHOLD COHN AND PARTNERS; P.O.B. 13239, 6 113 1 Tel-Aviv (IL).

(81) Designated States *(unless otherwise indicated, for every kind of national protection available):* AE, AG, AL, AM, AO, AT, AU, AZ, BA, BB, BG, BH, BN, BR, BW, BY, BZ, CA, CH, CL, CN, CO, CR, CU, CZ, DE, DK, DM, DO, DZ, EC, EE, EG, ES, FI, GB, GD, GE, GH, GM, GT, HN, HR, HU, ID, IL, IN, IS, JP, KE, KG, KM, KN, KP, KR, KZ, LA, LC, LK, LR, LS, LT, LU, LY, MA, MD, ME, MG, MK, MN, MW, MX, MY, MZ, NA, NG, NI, NO, NZ, OM, PA, PE, PG, PH, PL, PT, QA, RO, RS, RU, RW, SC, SD, SE, SG, SK, SL, SM, ST, SV, SY, TH, TJ, TM, TN, TR, TT, TZ, UA, UG, US, UZ, VC, VN, ZA, ZM, ZW.

(84) Designated States *(unless otherwise indicated, for every kind of regional protection available):* ARIPO (BW, GH, GM, KE, LR, LS, MW, MZ, NA, RW, SD, SL, SZ, TZ, UG, ZM, ZW), Eurasian (AM, AZ, BY, KG, KZ, RU, TJ, TM), European (AL, AT, BE, BG, CH, CY, CZ, DE, DK, EE, ES, FI, FR, GB, GR, HR, HU, IE, IS, IT, LT, LU, LV, MC, MK, MT, NL, NO, PL, PT, RO, RS, SE, SI, SK, SM, TR), OAPI (BF, BJ, CF, CG, CI, CM, GA, GN, GQ, GW, ML, MR, NE, SN, TD, TG).

Declarations under Rule 4.17:

— *of inventorship (Rule 4.17(iv))*

Published:

— *with international search report (Art. 21(3))*

(54) Title: BATTERY SELECTION SYSTEM AND METHOD

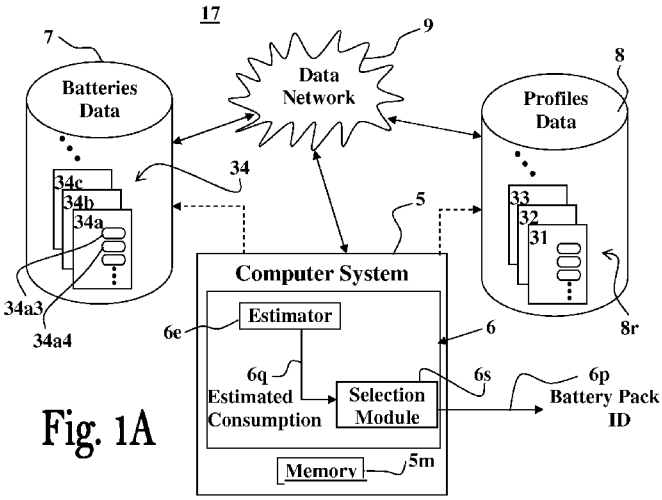

Fig. 1A

(57) Abstract: The application provides techniques for selecting a battery for an electric vehicle during, or before exchanging the used battery installed in the vehicle with a fresh one, in a battery exchange station. In some embodiments the battery selection utilizes profile data comprising at least user related data, which may be associated with a specific vehicle, and status data about a plurality of replenished battery packs available in the battery exchange station, and which may comprise at least the amount of stored energy in each of the replenished battery packs. An energy consumption estimate is computed for the vehicle and the status data and the energy consumption estimate are processed to select at least one replenished battery pack from the plurality of replemshed battery packs for the vehicle being serviced.

WO 2013/080211 A1

BATTERY SELECTION SYSTEM AND METHOD

TECHNOLOGICAL FIELD

The present application relates to a system and method for battery selection for an at least partially electrical vehicle.

BACKGROUND

It is now recognized that the use of rechargeable batteries results in longer battery lifespan and use of fewer batteries. Rechargeable batteries have gained wide acceptance mainly due to their environmental benefits, reusability, and as being recyclable and economical. Apart from the reusability and economical aspects, use of rechargeable batteries may further offer reductions in toxic risks, less impact on ozone pollution, and in general, reduced consumption of natural resources (compared to disposable batteries).

One important use of rechargeable batteries is in the electrical vehicle industry, which intends to gradually replace air polluting petrol and diesel internal combustion engine (ICE) vehicles with electric motor engine vehicles powered by rechargeable battery packs, or with the so-called hybrid vehicles which utilize both internal combustion and electric motors.

Various solutions for exchanging and replenishing batteries of electrical vehicles have been developed and are described for example in the following patent publications:

European patent publication No. 0902521 describes a battery rental system aiming to provide appropriate battery maintenance and control over battery charging and discharging, employing an unmanned automatic battery rental apparatus operated with a central control apparatus.

U.S. patent No. 6,014,597 describes a distributed electric vehicle battery exchange network employing a network of E-stops of battery exchange stations having control post units and card reader units.

U.S. patent publication No. 2003/209375 describes an electrical vehicle energy supply system for vehicles using removable cassette-type batteries, employing an

energy supply station having a plurality of cassette-type batteries which charge the batteries and store the charged batteries for servicing electrical vehicles entering the energy supply station.

GENERAL DESCRIPTION

The present application provides a novel approach for battery selection for an electrical vehicle enabling to accommodate suitably charged batteries to serviced vehicles. More particularly, the present application provides a battery selection scheme designed to accommodate user needs and comply with a predetermined battery selection policy.

The term *"vehicle"* as used herein generally refers to electrically powered transporting machinery utilizing a battery as their main power source, such as, but not limited to, electric cars, electric trucks, electric trains, diesel-electric locomotives and ships. It is noted that although the following description mainly refers to electrical vehicles, the present invention is applicable to other types of electric engine machines, such as, but not limited to, forklifts, golf carts, electric wheelchairs, riding floor scrubbers, electric motorcycles, trucks, vans, ships and locomotives. The term *"electrical vehicle"* used herein refers to an at least partially electrical vehicle, *i.e.*, all-electrical vehicle, or other types of electric engine machines as mentioned above.

The energy capacity of a rechargeable battery depends mostly on the size of the battery *{e.g.,* number of cells, cell arrangement and cell capacity), and since the capacity degrades over time, it depends also on usage and recharge history of the battery. Rechargeable batteries based on the Lithium-Ion technology are becoming more acceptable nowadays in electric vehicles. Such batteries, in certain arrangements, offer an average driving range of up to 160km. For many users this range is sufficient, as they typically travel between home and work locations, and in particular in situations where plug-in charging spots are available at home and work locations, allowing recharging of the vehicle batteries during off use time at work and/or at home.

However, there are cases wherein electrical vehicles are required to travel longer distances, which are often greater than the travelable distances feasible for the energy capacity of a typical rechargeable battery of an all-electric or hybrid vehicle. In addition, the route to a desired target destination may have no reachable battery

recharging facilities. In certain circumstances, battery recharging may be overly time demanding for a busy user, and the temperature of the used, partially or fully discharged, battery pack may also impose further recharging restrictions. In order to resolve such situations, a battery exchange station (BES) is to be configured to allow for quick replacement of a discharged, or partially discharged, battery with a replenished battery. Such battery exchange may be an additional service provided to users of electrical vehicles, in addition to typical battery recharge services, during which the electric vehicle is plugged to the charging grid to replenish its battery by an onboard, or offboard, battery charger.

The BES stores a plurality of batteries placed in recharge units or in a battery storage facility of the BES. The BES recharges the discharged batteries, removed from serviced electrical vehicles, in the charge units, and once adequately charged, stores the charged batteries in the battery storage facility, from which the charged batteries are supplied for installation in electric vehicles that are being serviced in the BES.

The recharging process of a battery may take more than an hour, even if high electric currents/voltages, and powerful cooling systems, are used in the BES. The temperature of batteries extracted from vehicles may be relatively high *(e.g.* , about 45°C) due to continuous use. During the time in which the battery is being recharged and stored in the BES, the temperature of the extracted battery may not decrease, or may even rise, in particular due to the aggressive charging process in the BES (e.g., employing high electric voltages/currents).

The amount of energy which can be stored in a specific rechargeable battery does not remain fixed over time and depends on the state and overall condition ("health") of the battery. Such conditions of rechargeable batteries reflect the age and history of the battery, and typically depend on the number of recharge/discharge cycles the battery has undergone and on the magnitude of the recharge/discharge currents/voltages used in these cycles. For example, the higher the number of recharge/discharge cycles a battery has undergone, the lower the effective capacity of the battery. In addition, charging using high electrical currents also degrades battery capacity.

Battery temperature also affects battery usage, since high temperature batteries may give limited performance during the course of driving. For example, charged batteries slowly become discharged even if they are not connected to a load, and such a

slow discharge effect is increased when the temperature of the battery is high *(e.g.* , above 40°C). In addition, rechargeable batteries also age and lose some of their capacity over time (even if not used or go through recharge/discharge cycles), and exposure to high temperatures accelerates the battery aging process significantly.

High temperature conditions of rechargeable batteries accelerate the aging of the battery, which is typically reflected in increase in the internal resistance of the battery. Such increase in the internal resistance of the battery causes higher internal loses, which also diminishes the output voltage that the battery can supply.

Due to the above factors, and since the rate of electric vehicles serviced in the BES may drastically vary between peak and off-peak hours, a typical BES may encounter at any given time situations in which the BES has numerous batteries, each having different maximal energy capacity and different amounts of stored energy, and that need to be serviced to a plurality of electric vehicles, each of which may have different expected needs.

The present application in some of its embodiments provides a system and method for selecting a battery pack to be installed in an electrical vehicle, in a battery exchange station, according to data related to energy consumption patterns of a user of the electric vehicle. The battery selection scheme in some embodiments is designed to study and analyze energy consumption features of the user of the electrical vehicle, and to select a suitable battery pack from a stock of replenished battery packs available in the battery exchange station. In possible embodiments, a replenished battery pack is selected to allow the user to safely reach a desired target destination and/or another battery service station located along, or in the vicinity, of the route the user intends to drive towards the target destination.

The battery selection scheme in some embodiments is performed by providing status data *(e.g.* , amount of stored energy, battery temperature, efficiency, and suchlike) concerning a plurality of replenished battery packs available in the battery exchange station, and collecting profile data comprising the user related data. The profile data is used for calculating an energy consumption estimate, and the status data and the energy consumption estimate are processed for selecting at least one replenished battery pack from the plurality of replenished battery packs for the specific vehicle.

The profile data is analyzed to define expected features required from a replenished battery pack to be installed in the vehicle. The expected features comprise

at least one of the following: battery type or types of compatible battery packs; battery temperature range; battery age; battery health; and battery efficiency. Accordingly, the selecting may be based at least in part on said expected features. The expected features are then used in the battery selection to search in the status data of the available battery packs for at least one replenished battery pack, satisfying the expected features, to be installed in the vehicle from the stock of battery packs available in the battery exchange station.

For example, the profile data may include data about driving habits of the user *(e.g. ,* frequently driven routes, driving speeds, tendencies for aggressive accelerations and decelerations), which may be then used to determine a target destination of the user and calculate accordingly a minimal amount of energy required for the specific user to reach the target destination. The profile data may further include indications concerning the vehicle used by the user *(e.g. ,* vehicle weight, energy consumption efficiency, motor specifications, and suchlike), which may be used to adjust the calculation of minimal amount of energy required, accordingly. In other exemplary embodiments the profile data further includes indications concerning the battery pack *(e.g. ,* type, weight, geometric dimensions, efficiency, and suchlike) currently used in the vehicle, which may be also used in the battery pack selection to ensure that the selected replenished battery pack is of the same, or compatible, type.

In some exemplary embodiments, the profile data indications *(e.g. ,* concerning the user, the battery pack currently in use and/or the vehicle) are collected and analyzed in order to determine a battery selection profile reflecting battery features *(e.g. ,* amount of stored energy, battery temperature, battery efficiency, and suchlike) required from a replenished battery pack to be installed in a specific vehicle used by the specific user. In these exemplary embodiments the features defined in the battery selection profile are used in the battery selection process to find at least one battery pack from the stock of battery packs available in the battery exchange station that complies with the requirements defined in the battery selection profile.

The battery pack selection process may be adapted to provide users of the vehicles serviced in the battery exchange station replenished battery packs satisfying their needed driving coverage *(e.g. ,* battery conditions required for reaching a desired target destination) and which may minimize their need to visit additional battery exchange stations during the drive towards the target destination. Accordingly, in some

possible embodiments, the battery pack selection process is adapted to provide users with battery packs having the highest level of charged energy and lowest temperature level. In other possible embodiments, the battery selection process is adapted to select at least one replenished battery pack having the minimal level of charged energy and certain range of temperatures permitting the vehicle to safely reach a desired target destination and/or a battery exchange/recharge station located along the route to be driven by the user towards the target destination, or adjacent to this route.

In some possible embodiments, the battery pack selection process further employs a battery pack selection policy. The battery pack selection policy may be defined by the battery exchange station or by a service provider managing the, or coordinating with, the battery selection station, to introduce additional considerations in the battery selection process. For example, the battery selection policy may be used to enable the battery exchange stations to meet users' requirements during times of high demands for battery exchange services. Alternatively or additionally, the battery selection policy may be adapted to maintain a desired average level of energy stored in the battery packs available in the battery exchange station, for example, in order to regulate energy supply rates. Yet alternatively or additionally, the battery selection policy may be adapted to equalize the level of wear of all battery packs used, for example, by guiding the battery selection process to give priority in the battery selection process to newer battery packs and/or battery packs having better health conditions.

Therefore, according to an aspect of some embodiments of the present application, there is provided a method for selecting a battery for a vehicle in a battery exchange station. The method comprises providing profile data comprising at least user related data associated with a specific vehicle, providing status data about a plurality of replenished battery packs available in the battery exchange station, calculating an energy consumption estimation based on the profile data, processing the status data and the energy consumption estimate and, based thereon, selecting at least one replenished battery pack from the plurality of replenished battery packs for the specific vehicle.

Preferably, the status data comprises at least the amount of stored energy in each of the replenished battery packs. Optionally the status data comprises a plurality of records, each record comprising data indicative of a specific battery pack from the plurality of replenished battery packs available in the battery exchange station. For example, each of these data records may comprise at least one of the following: battery

identifier; battery maximal capacity; battery charge level; battery temperature; battery location specifying whether said battery is being recharged or being stored after such recharge; and battery health.

The profile data may comprise vehicle related data of the specific vehicle and/or information about driving routes frequently driven by the user of the vehicle. In a variant, the vehicle related data comprises at least one of the following: vehicle type, vehicle weight and motor efficiency. Optionally, the profile data further comprises battery data specifying features of a battery pack currently installed in the vehicle, wherein the battery data may include at least one of the following: battery type, battery age, battery temperature, battery health, battery efficiency, and a battery identifier.

In possible embodiments, the profile data further comprises at least one of the following: energy replenishment patterns specifying user's patterns of battery exchange and/or recharge; service package data specifying terms and agreement of user subscription; and target destination data specifying at least one target destination of said user.

The method may further comprise determining a target destination of the user of the vehicle based on the profile data, and using the target destination for calculating the energy consumption estimation. Optionally, the target destination is determined by generating a query to the user, and the energy consumption estimation is calculated based on user's response to the query.

In possible embodiments the selecting of at least one replenished battery pack comprises selecting from battery packs which temperature is lower than a preset threshold value *(e.g.* , 33°C).

The calculating of energy consumption estimation may further comprise determining expected features for battery pack selection, and the selecting may be based at least in part on the determined expected features. The expected features may comprise at least one of the following: battery type or types of compatible battery packs; battery temperature range; battery age; battery health; and battery efficiency.

The method may further comprise providing a battery selection policy for introducing additional considerations in the selection of the at least one replenished battery pack, wherein the additional considerations may include reservation of replenished battery packs having a desired level of charged energy and/or of temperature. Alternatively, the additional considerations may include maintaining a

desired average level of energy stored in the battery packs available in the battery exchange station. Optionally, the additional considerations may include equalizing the level of wear of all battery packs used.

According to another aspect of some embodiments of the present application there is provided a management system for use in selecting a battery for a vehicle in a battery exchange station. The management system comprises a memory utility for storing data comprising status data about a plurality of replenished battery packs available in the battery exchange station, wherein the status data comprises at least amount of stored energy in each of the replenished battery packs, and a processor utility comprising: an energy consumption estimator module configured and operable for receiving and processing profile data comprising vehicle related data and respective user related data for estimating energy consumption for the vehicle used by the user, and for generating data indicative thereof; and a battery selection module configured and operable for receiving and processing the status data and data indicative of the estimated energy consumption, and generating output data indicative of at least one replenished battery pack from said plurality of replenished battery packs selected for the specific vehicle.

In possible embodiments, the energy consumption estimator module is configured and operable for determining a target destination of said user, based on said profile data, and for using the target destination for calculating of the energy consumption estimation. Additionally or alternatively, the processor utility may be configured and operable for generating a query to the user for determining a target destination to be used for calculating the energy consumption estimation.

In exemplary embodiments of the present application the energy consumption estimator module is configured to select the battery pack for the specific vehicle from battery packs, in the plurality of replenished battery packs, whose temperature is lower than a preset threshold value *(e.g.* , 33°C).

In a variant, the energy consumption estimator module is further configured and operable for determining expected features for battery pack selection, wherein the expected features comprise at least one of the following: battery type or types of compatible battery packs; battery temperature range; battery age; battery health; and battery efficiency. Advantageously, the selecting may be based at least in part on the determined expected features.

According to yet another aspect of some embodiments of the present application there is provided a management system for use in managing battery selection for vehicles in a battery exchange station. The management system comprises a memory utility accessible from the battery exchange station and comprising status data about a plurality of replenished battery packs available in the battery exchange station, and a control system connectable to said memory utility and connectable to users' service provider utility for receiving profile data comprising vehicle related data and respective user related data. The control system comprises an energy consumption estimator module configured and operable for processing the profile data and estimating energy consumption for the vehicle used by the user and generating data indicative thereof, and a battery selection module configured and operable for receiving and processing the status data and data indicative of the estimated energy consumption, and generating output data indicative of at least one replenished battery pack from the plurality of replenished battery packs selected for the specific vehicle. Preferably, the status data comprises at least the amount of stored energy in each of the replenished battery packs.

According to yet another aspect of some embodiments of the present application there is provided a management system for use in managing battery selection for vehicles in a battery exchange station. The management system comprises a control system connectable to a storage device for receiving status data about a plurality of replenished battery packs available in the battery exchange station, wherein the status data comprises at least the amount of stored energy in each of the replenished battery packs, and wherein the control system is connectable to users' service provider utility via a communication network for receiving profile data comprising vehicle related data and respective user related data. The control system comprises an energy consumption estimator module configured and operable for processing the profile data and estimating energy consumption for the vehicle used by the user and generating data indicative thereof, and a battery selection module configured and operable for receiving and processing the status data and data indicative of the estimated energy consumption, and generating output data indicative of at least one replenished battery pack from said plurality of replenished battery packs selected for the specific vehicle.

According to yet another aspect of some embodiments of the present application there is provided a management system for use in managing battery selection for vehicles in a battery exchange station. The system comprises a server system connected

to a communication network, wherein the server system comprises a data input utility for receiving and identifying a request data indicative of a request of a user of a vehicle at the battery exchange station, a first communication utility for communicating with a storage device and receiving status data about a plurality of replenished battery packs available in said battery exchange station, wherein the status data comprises at least amount of stored energy in each of the replenished battery packs, a second communication utility for communicating with a users' service provider utility for receiving profile data comprising vehicle related data and respective user related data, and a processor system. The processor system comprises an energy consumption estimator module for processing the profile data and estimating energy consumption for the vehicle used by the user and generating data indicative thereof, and a battery selection module for processing the status data and data indicative of the estimated energy consumption, and generating battery selection data indicative of at least one selected replenished battery pack from a plurality of replenished battery packs at the battery exchange station selected for the vehicle.

BRIEF DESCRIPTION OF THE DRAWINGS

In order to understand the invention and to see how it may be carried out in practice, embodiments will now be described, by way of non-limiting example only, with reference to the accompanying drawings, in which:

Figs. 1A to **1C** are block diagrams schematically illustrating some embodiments of the battery selection technique of the present application, wherein **Fig. 1A** exemplifies a battery management system, **Fig. IB** exemplifies a battery service system, and **Fig. 1C** exemplifies a battery exchange station;

Fig. 2A and **Fig. 2B** schematically illustrate a battery exchange process according to possible embodiments of the present application, wherein **Fig. 2A** is a flowchart illustrating a possible battery selection and exchange process and **Fig. 2B** is an event trace diagram demonstrating possible data flow in such a possible battery selection and exchange process; and

Figs. 3A to **Fig. 3E** are block diagrams schematically illustrating possible profile data records and data structures used and determined in possible embodiments of the present application, wherein **Fig. 3A** demonstrates a possible user profile data record, **Fig. 3B** demonstrates a possible battery profile record, **Fig. 3C** demonstrates a

possible vehicle profile data record, **Fig. 3D** demonstrates a possible battery selection profile defining various properties and conditions expected from the selected battery pack, and **Fig. 3E** demonstrates a possible status data report of battery packs available in the battery exchange station.

It is noted that the embodiments exemplified in the figures are not intended to be in scale and are in diagram form to facilitate ease of understanding and description.

DETAILED DESCRIPTION OF EMBODIMENTS

The present disclosure provides a battery selection scheme useful for selecting a battery for an electric machine serviced in a battery exchange station (BES). The battery selection scheme of the present invention is adapted to satisfy user and machine needs, and optionally also a predefined battery selection policy. Though the following description mainly relates to electric vehicles, as will be recognized by those of ordinary skill in the art, the present invention is applicable, *mutatis mutandis*, to almost any electric machine utilizing rechargeable batteries.

In general, the battery selection technique of the present application is carried out by a management system configured and operable for processing profile data related to at least the user of a vehicle, calculating, based on the profile data, an energy consumption estimate for the vehicle when driven by the user to a target destination, and analyzing status data about a plurality of replenished battery packs available in the BES and the calculated energy consumption estimate for selecting from the plurality of available replenished battery packs at least one replenished battery pack capable of satisfying at least the estimated energy consumption. The battery exchange station may be part of, or connectable to, the management system which manages the exchange of batteries of a plurality of vehicles in one or more such battery exchange stations distributed over geographical areas in which the vehicles are used.

Fig. 1A schematically illustrates one possible embodiment of a battery management system **17** configured to select a battery for a vehicle serviced in a battery exchange station. In this example, the system **17** comprises a data storage device **7** (also referred to herein as a memory utility) which stores and manages status data **34** about a plurality of replenished battery packs **(34a, 34b, 34c,...)** available in the battery exchange station(s). The status data **34** may comprise for each replenished battery pack

(e.g., **34a)** data indicative of at least the amount of stored energy *(e.g.,* **34a3)** and the temperature *(e.g.,* **34a4)** of the battery pack.

An additional data storage device **8** may be used in the system **17** to store and manage profile data **8r.** It is however noted that in possible embodiments the status data **34** and the profile data **8r** are stored and managed by a single data storage device *(e.g.,* data storage device **7).** As indicated above, the profile data **8r** comprises user related data. Preferably, the profile data **8r** also comprises vehicle related data about the vehicle used by the user. In possible embodiments the profile data **8r** comprises the following: data about the users of each of the vehicles **(31);** data about each of the vehicles **(33)** serviced at the BES; data about the battery pack **(32)** currently installed in each of the vehicles.

System **17** includes a computer system **5** having a processor **6** and a memory **5m.** System **17** is configured to communicate data with the data storage devices **7** and **8** over a data network **9** *(e.g.,* wireless network such as a cellular network or computer network such as the Internet), and manage the battery selection and exchange operations. In some exemplary embodiments the computer system **5** is directly coupled to the data storage devices **7** and **8** (designated by dashed arrowed lines) for communicating data therewith, such that the data network **9** is not necessarily required. The data storage devices **7** and **8** may be hosted and managed by the computer system **5,** *e.g.,* the computer system **5** and storage devices **7** and **8** are located in the same site, room or building, or even operably housed and packaged in the same unit.

In some possible embodiments, data storage device **7** comprising the replenished batteries status data **34** is hosted and managed in the battery exchange station. Computer system **5** may be also part of the battery exchange station, as will be exemplified hereinbelow. In some possible embodiments, the storage device **8** comprising the profile data **8r** is hosted and managed by a service provider which may be located at a remote location and configured to communicate with the battery exchange stations, and possibly also with the vehicles, over the data network **9.** Data storage devices **7** and **8** may be implemented utilizing any suitable volatile and/or non-volatile memory devices *(e.g.,* RAM, magnetic hard disks, FLASH memories, optical disks, and suchlike), and may be hosted on a computer server *(e.g.,* RAID server), as well known to those skilled in the art.

The processor unit **6** includes an energy consumption estimator module **6e** and a battery pack selection module **6s.** The energy consumption estimator module **6e** is configured and operable for receiving and processing the profile data **8r,** calculating energy consumption estimation **6q** for a serviced vehicle when used by the user, and generating data indicative thereof. The battery pack selection module **6s** is configured and operable for receiving and processing the status data **34** and the energy consumption estimation **6q** calculated by the estimator **6e,** and generating output data **6p** indicative of at least one selected replenished battery pack from the plurality of available replenished battery packs, the at least one selected replenished battery pack being capable of at least partially satisfying the calculated energy consumption estimation **6q.**

The management system **17** may include, or be incorporated in, a server system connected to the communication network. The server system is configured to receive data from a data input utility and identify a request data indicative of a request of a user of a vehicle at the battery exchange station. The server system includes a first communication interface *(e.g.* , Ethernet, WiFi, modem, or suchlike) for communicating replenished battery status data **34** with data storage device **7,** and a second communication interface for communicating profile data **8r** with data storage device **(7** or **8).** The server system further includes a control unit or processor utility configured as the above described computer system including, the energy consumption estimator module **6e** for processing the profile data and estimating energy consumption for the vehicle used by the user, and the battery selection module **6s** for processing the status data and the data indicative of the estimated energy consumption and generating battery selection data.

Fig. IB exemplifies an electrical vehicle battery service system **16** according to some embodiments. Electrical vehicle battery service system **16** includes a central control system **15** (marked in the figure as "control center") configured to communicate data with control units of a plurality of battery exchange stations (BES) **10** and control units installed in electric vehicles (EV) **12.** Each battery exchange station **10** includes its associated control unit **lOt,** charger and storage apparatus **10c,** and a service lane **13** providing electrical vehicles **12** visiting the battery exchange station **10** with access to a battery exchange apparatus **lOx** of battery exchange station **10.**

Battery exchange apparatus **lOx** is configured to remove the battery pack **13d** (shown in **Fig. 1C)** of a serviced vehicle **12** and replace it with a recharged battery pack **13g** (see **Fig. 1C).** More particularly, the battery exchange apparatus **lOx** is operable to remove a partially or fully discharged battery pack **13d** from a serviced vehicle **12,** transfer the removed battery pack **13d** to charger and storage apparatus **10c** for recharge and storage, fetch a replenished battery pack **13g** from recharge and storage apparatus **10c,** and install the fetched battery pack **13g** in the serviced electric vehicle **12.**

Data communication between the control units of the battery exchange stations **10** and the central control system **15** may be carried out over wired communication links *(e.g. ,* landline telephony, cables), over optical communication links *(e.g. ,* fiber optics) and/or wirelessly *(e.g. ,* RF cellular network, WiFi, or satellite communication). Optionally, the data communication between the battery exchange stations **10** and the central control system **15** is carried out employing standard data communication networks *(e.g. ,* LAN, WAN, WLAN, MAN, SAN) and protocols *(e.g. ,* TCP/IP), for example, over the Internet. Data communication between the control units of the electric vehicles **12** and the central control system **15** (indicated by dashed-dotted arrowed lines) may be carried over any suitable state of the art wireless communication *(e.g. ,* cellular network, WiFi, IR, Bluetooth, or satellite).

As demonstrated in **Fig.** IB, the communication between the control units of the vehicles **12** and central control system **15** may be intermittently available due to varying geographical and environmental conditions and/or limited availability of wireless communication nodes. Electric vehicles **12** approaching exchange apparatus **lOx** on lane **13** may communicate data with the control unit **lOt** of the battery exchange station over wired, or wireless (by establishing WLAN communication between the internal computer of the vehicle and the control unit **lOt),** data communication links (indicated by dashed arrowed lines). It should be understood that the same wireless communication links utilized by the control units of the electric vehicles **12** to communicate with the central control system **15** may be also utilized by the electric vehicle **12** to communicate data with the control unit **lOt** of the battery exchange apparatus. However, the battery exchange apparatus **lOx** may be equipped with appropriate wired communication interfaces *(e.g. ,* modems, UART, I2C, USB, Ethernet) connectable to the internal computers of the serviced vehicles **12** during the battery exchange process for exchanging data between them therethrough.

As shown more specifically in the example of **Fig. 1C,** the electrical vehicle **12** includes an internal computer (control unit) **12m** *(e.g. ,* onboard telematic device) which is capable of establishing data communication with the central control system **15** and also with various modules of battery exchange apparatus **10.** Such an internal computer **12m** may be configured to monitor and manage the battery pack **13d** of vehicle **12,** and to communicate with central control system **15** and with the control unit **lOt** via a communication interface unit **12i** (indicated as interface **I/F** in **Fig. 1C).** The internal computer **12m** may be also configured to receive inputs from the user and display data and images to the user, by means of the respective user interface (not shown).

Vehicle **12** may further comprise a positioning system **12p** *(e.g. ,* GPS, or any other type of cellular or satellite positioning system) which may be used together with internal computer **12m** to determine possible routes for vehicle **12** to travel and reach a desired destination indicated by the user. Internal computer **12m** may be adapted to prepare a driving route for reaching a desired target destination indicated by the user. Additionally or alternatively, internal computer **12m** may be configured to transfer from time to time vehicle location data obtained from positioning system **12p,** and/or the desired target destination data obtained from the user, to the central control system **15.** Accordingly, the central control system **15** may be used for determining a driving route for the specific vehicle **12** towards the user's desired target destination based on the location and destination data it receives from the vehicle **12.**

Internal computer **12m** may be further configured to provide the central control system **15** with data about the status *(e.g. ,* amount of stored energy and temperature) of the battery pack used in the vehicle **12.** In such possible embodiments the central control system **15** may be further configured to issue alerts whenever the amount of energy stored in the battery pack of the vehicle is below a predetermined threshold. The alerts may be transmitted to the vehicle **12** (its control unit **12m)** and further used by the central control system **15** to place a battery exchange service reservation for vehicle **12** in a battery exchange station located nearby, or along (or adjacent to) the route driven by the user. Alternatively or additionally, the central control system **15** may be configured to plan, or adjust, the route driven by the user based on the vehicle location data, the desired target destination data and the battery state data, received from the internal computer **12m,** and thereby guarantee that the user safely reaches the target destination.

With reference to **Fig. 1C,** battery exchange station **10** may comprise a user identification unit **18** (designated as **UID** in **Fig. 1C)** configured to receive user identification information *(e.g.* , user name and/or password, PIN code, biometric identifier, or any other suitable user identifier) and transmit the same to control unit **lOt** over any suitable wired or wireless communication link (indicated by a dotted arrowed line) provided therebetween. For this purpose, user identification unit **18** may comprise a user interface utility including keypad or keyboard and display means, RFID reader unit, personal user card reader, such as credit card reader or smart card reader, biometric scanner or detector, or any combination thereof. Alternatively, user identification may be carried out via internal computer **12m,** using user identification means, such as indicated hereinabove, to communicate the user identification data through the communication link obtained between the electric vehicle **12** and control unit **lOt.**

The user identification unit **18** may be further configured to carry out a user authentication and/or authorization procedure(s) for allowing the system **17** to bill a user account, and/or settle payment through a third party *(e.g.* , financial institution, such as, for example, a bank or a credit card company), for the service provided to the user by the BES **10.**

The battery service system **17,** the battery exchange station **10** and/or the battery exchange apparatus **lOx,** may be implemented utilizing one or more of the embodiments described in International Patent Publications Nos. WO 2009/039454, WO 2010/033517, WO 2010/033883 and/or WO 2010/033881, all assigned to the assignee of the present application and being incorporated herein by reference.

A possible battery management process will be now described with reference to **Fig. 2A** and **Fig. 2B.**

In the exemplary battery management process **20** illustrated in **Fig. 2A,** a vehicle **12** accesses the exchange apparatus **lOx** (step **21),** and identifying information is transmitted from the internal computer **12m** of the vehicle **12** to the control unit **lOt** of the battery exchange station (step **22).** Such identifying information comprises user identifying data *(e.g.* , user identification number, passport number, subscription number, or suchlike) and preferably also vehicle identification data *(e.g.* , vehicle registration number, vehicle identification number, manufacturer serial number, or suchlike). However, possible embodiments may include only transmittal of user identification data which may be required for billing the user for the service provided by

the battery exchange station **10,** and in such cases the user identifying data may be securely transmitted to control unit **lOt** by means of user identification unit **18.**

The transmittal of identifying data in step **22** to the control unit **lOt** may be performed as part of a user request to receive a battery exchange service from the BES **10.** The user identification in step **22** may be aimed at user authentication and authorization which may be carried out utilizing any suitable state of the art authentication/authorization protocol *(e.g.* , user name and password, detection of biometric signatures, or suchlike).

After the user is identified, and if needed also authenticated, control unit **lOt** operates to fetch one or more data profiles (step **23),** for example, of the user, of the vehicle and/or of the battery pack used in the vehicle **12** to be serviced. In some embodiments, the data profiles are fetched from databases maintained and accessible by the central control system **15.** Additionally or alternatively, the data profiles are fetched from the control unit **lOt** of the battery exchange station and/or the internal computer **12m** of vehicle **12.** While in some preferred embodiments the profile data is fetched from the central control system **15** alone, control unit **lOt** of the battery exchange station and/or central control system **15** may be configured to interrogate the internal computer **12m** of the vehicle for updates, for example, concerning recent battery recharge events, vehicle performance over certain routes, user driving habits, and suchlike.

The user data profile may include information concerning user's driving habits *(e.g.* , driving speeds and accelerations/decelerations), frequently driven routes and times during the day in which these frequent routes have been driven, usage of air conditioning, power consumption during specific routes (such as the frequently driven routes) and driving times, the state of user's subscription and/or user's account, and suchlike. The vehicle data profile may include information concerning the vehicle specification and operating conditions, such as, but not limited to, vehicle weight and type, energy consumption characteristics, vehicle efficiency, and suchlike. The battery profile may include information concerning battery type *(e.g.* , Lead-acid, Nickel metal hydride, Zebra, Lithium ion) and make, efficiency and storage capacity, working temperatures, recharge history, and the like.

The control unit **lOt** of the battery exchange station may further determine the destination data of the user of the vehicle (step **24).** In certain cases, the destination information may be provided by the internal computer **12m** of the vehicle **12,** however,

if the user did not indicate a desired target destination, it may be determined based on information in the fetched user profile. For example, if the user constantly drives from home to work during regular hours of ordinary business days, in case the user started the ride from home during such usual hours of the day, it may be assumed with a high degree of confidence that the working place is the user's target destination, in particular if the accessed BES **10** is on, or proximal to, the user's frequently used route between the home and work locations. The target destination may be determined by at least one of: the internal computer **12m,** the control unit **lOt** of the BES, and the central control system **15.**

Control unit **lOt** of the BES then fetches from charger and storage apparatus **10c** (step **25)** a status report concerning all battery packs **13g** that are currently available in storage or that are being recharged, and their charged levels. The control unit **lOt** may then use the information determined and fetched in steps **23** to **25** to select a suitable battery for the vehicle **12** to be serviced (step **26).** However, if the state of the user's subscription and/or account indicates that the user's registration needs to be renewed, or that payment is required to settle the user's account, the vehicle servicing process **20** may be halted (or terminated) until the user settles the needed payments and/or registration formalities, optionally, onsite at the battery exchange station **10.**

The control unit of the battery exchange station **10** may be periodically or continuously updated concerning the charging state/level, type, history and conditions *(e.g. ,* temperature and health), of all battery packs **13g** that are stored or being recharged at the charger and storage apparatus **10c.** Each of the battery packs **13g** in the charger and storage apparatus **10c** may be uniquely identified using, for example, bar codes, ID chips, RFID, and suchlike. Information concerning each of the batteries *(e.g. ,* manufacturer specifications, battery health and/or history) in the charger and storage apparatus **10c** may be further obtained from a centralized server (not shown) communicatively linked to the network of system **17/16.**

Fig. 2B is an event trace diagram **29** exemplifying dataflow in a possible battery selection and exchange process. The battery selection process may be initiated in the user identification step **(SI)** in which one or more user identifiers *(e.g. ,* user name, subscription number), and possibly other data (password, PIN, biometric data), are sent from user identification unit **18** to the control unit **lOt.** It is noted that the requests for battery pack replacements may be generated by the control units **12m** of the vehicles **12**

or control unit **lOt** of the BES **10** when the vehicles arrive to the BES **10,** for example, each time a user is authenticated and/or authorized at a user identification unit **18.**

According to another example, an advance notification **(SI',** indicated by a broken arrowed line) may be sent from the internal computer **12m** of vehicle **12** to the central control system **15** to reserve a battery replacement slot for the vehicle **12** ahead of time. Upon receipt of such an advance request **(SI'),** central control system **15** transfers **(SI",** also indicated by a broken arrowed line) the details of vehicle **12** and/or of the user to the control unit **lOt** of the BES to schedule the reservation for service of vehicle **12** in the BES **10.** In addition, if such advance notification **(SI')** is sent from the vehicle's internal computer **12m,** the latter may be further used to carry out the user authentication/authorization process, for example by establishing a secure channel *(e.g.,* SSL may be used over wireless communication) between the internal computer **12m** and the central control system **15** (or control unit **lOt** of the BES).

According to yet another example, which may be used as an alternative, or in addition to the above described example, a request for service **(SI'",** indicated by a broken arrowed line) may be sent to the control unit **lOt** of the BES from the vehicle's internal computer, including the user's and/or vehicle identifying information. Possibly, the request **(SI'** or **SI'")** sent from vehicle **12** (to the central control system **15** or to the control unit **lOt)** may be followed by a user identification and authentication/authorization procedure (not shown) which may be carried out through the internal computer **12m** or at the user identification unit **18** of the BES **10.** Accordingly, the user authentication/authorization procedure carried out through the internal computer **12m** may be carried out from a remote location, before the vehicle **12** reaches the BES **10,** or during or after the vehicle **12** accesses the BES **10.**

The control unit **lOt** then requests profile data **(S2)** from the central control system **15** concerning the user who has issued the request to service the vehicle **12,** and the user profile data is then extracted and sent **(S4)** to control unit **lOt** of the BES. The profile data provided to the control unit **lOt** may comprise certain additional information including, but not limited to, battery profile data and/or vehicle profile data.

With reference to **Fig. 3A,** showing an exemplary user profile data record **31,** the user profile data may include one or more of the following data sets: driving data **(31a),** frequent routes **(31b),** energy replenishment patterns **(31c),** service package **(31d),** and list of destinations **(31e).**

Driving data set **(31a)** includes information concerning driving habits/style, road behavior and other driving data of the user, such as captured by drive recorders. For example, the driving data set may include user's driving speeds *(e.g.*, highway and urban roads speeds), frequencies of aggressive accelerations and decelerations, windows state and use of air-conditioning along frequently used routes and/or daily times thereof, and suchlike. This data set may be updated from time to time based on driving data updates recorded by the internal computer **12m** of vehicle **12.**

Frequent routes related data set **(31b)** includes information concerning routes frequently driven by the user and time of day in which these routes are usually driven by the user. The routes may be provided as an ordered set of waypoints *(e.g.*, ten or twelve digits waypoints), of road numbers, and/or of road junctions, for example. This data set may further comprise additional data concerning the roads frequently used by the user, such as, for example, the traffic loads on these roads within the times of the day during which the user access these roads, driving conditions of these roads *(e.g.*, number and uphill and downhill slopes, winds strength and direction), and suchlike. The additional data may also comprise indications about the number of passengers in the vehicle and/or overall vehicle weight during such frequently driven routes. For example, the internal computer **12m** of the vehicle may be configured to determine the number of passengers in the vehicle by using sensors *(e.g.*, pressure or tension sensors) installed in the seats of the vehicle, and/or to measure the overall vehicle weight, for example based on pressure (or tension) sensors installed on the suspension system of the vehicle **12** and configured to provide indications corresponding to vehicle loads to the internal computer of the vehicle **12m.**

Energy replenishment patterns **(31c)** include information concerning the frequencies of battery recharging/discharging and/or replacements, and time durations and locations thereof. For example, a user who uses vehicle **12** mainly to drive between home and work locations may regularly recharge the vehicle battery pack using charging spots at these locations during specific time durations and hours of the day. Other users may drive longer distances and thus may regularly exchange exhausted battery packs with fresh ones during certain times and in certain favorable locations.

Service package data set **(3Id)** includes data concerning the user's subscription terms, and services provided therein. For example, this data set may indicate whether the package of services the user subscribed for includes battery exchange services, type

of batteries the subscription covers, any insurance coverage the subscription may provide, and suchlike.

Destination data set **(31e)** includes data concerning the regular driving destinations of the user during certain times of the day and days of the week, and/or the actual driving destination at the time the vehicle is being serviced, if so indicated by the user.

Fig. 3B illustrates data sets possibly included in a battery profile data **32** according to some embodiments. The battery profile data may include: battery type data **(32a),** age and/or health data **(32b),** recharge and exchange history data **(32c),** calculated efficiency **(32d),** and battery ID **(32e).**

Battery type **(32a)** data set includes data concerning the model and specifications of the battery pack **13d** to be replaced *e.g.,* maximal capacity, maximal/nominal working electrical voltages/currents, weight, efficiency, working temperatures, specified recharge electrical voltages and currents and time durations, and suchlike. Age and health **(32b)** data set includes data concerning condition and state of the battery pack **13d** *e.g.,* actual capacity, capacity at high temperatures, discharge rate in an unloaded state, year of manufacture, expected life-span, known fluctuations from battery manufacturer specifications, any known malfunction events, and suchlike. Recharge and exchange history **(32c)** data set includes data concerning all past recharge events and optionally a list of electrical vehicles in which the specific battery pack **13d** was used in the past. This data set may further include details concerning past recharge events *{e.g.,* time durations, electric voltages and currents used during past recharge cycles, and suchlike) and the battery performance recorded in each of the vehicles in which the battery was previously installed. Calculated efficiency **(32d)** data set includes battery efficiency values calculated by the central control system **15** based on recorded battery performance and charging history. The measured battery efficiency may be different from the value specified by the manufacturer and may be used to evaluate the battery state and expected performance. The battery ID **(32e)** data set includes one or more identifiers which may be used to uniquely identify the battery pack **13d** currently used in vehicle **12.**

Data provided in the battery profile **32** may be used in the battery selection process to select a type of battery having suitable specifications *{e.g.,* size and geometrical dimensions, and electrical characteristics). In possible embodiments, the

battery profile **32** is used in the battery selection process to find a battery pack **13g** that is more or less of the same age and has health conditions as those of the battery pack **13d** installed in the vehicle **12** to be serviced. Alternatively or additionally, the battery profile **32** is also used by the control unit to prepare a charging plan to be used in the charger and storage apparatus **10c,** for example, based on the recharge and exchange history **32c** and on the age and health **32b** datasets.

Fig. 3C illustrates data sets possibly included in a vehicle profile data **33** according to some embodiments. The vehicle profile data **33** may include: vehicle type **(33a),** vehicle weight **(33b),** and/or motor efficiency **(33c),** for example.

Vehicle type **(33a)** data set includes information concerning the model and brand of the vehicle **12.** Weight **(33b)** data set includes information concerning vehicle weight, and possibly also concerning maximal weights the vehicle may be loaded with according to manufacturer specifications. Motor efficiency **(33c)** data set includes information concerning the energy consumption efficiency of the motor of the vehicle to be serviced.

If the vehicle **12** to be serviced placed a reservation **(SI'),** the profile(s) data may be sent to the control unit **lOt** of the BES by the central control system **15** with the request **(SI")** to schedule the reservation, before or during access of the vehicle **12** to the BES **10.**

In some possible embodiments, if there is no indication in the user profile **31** concerning the destination of the vehicle, control unit **lOt** of the BES may communicate the vehicle **12** to be serviced **12 (S4',** indicated by a broken arrowed line) and request this information directly from the internal computer **12m.** If such a request **(S4')** is received, the internal computer **12m** may request the user to indicate a destination, if user destination is not indicated to it before, and then send a response **(S4",** also indicated by a broken arrowed line) to control unit **lOt** of the BES indicating the destination information. If, after this communication **(S4,** and/or **S4' S4"),** the user destination is still unknown, control unit **lOt** may attempt to determine the destination based on the user profile **31,** for example according to regularly routes driven by the users on certain days and at certain times of day, as discussed and exemplified hereinabove.

The data received **(S4)** from the central control system **15** may include a battery selection policy to be used by the control unit **lOt** in the battery pack selection process.

For example, the central control system **15** may predict trends of battery exchange demands based on data received from vehicles **12.** Thus, the battery selection policy may be adapted to reserve an adequate amount of battery packs having a certain amount of charged energy and certain ranges of temperatures in order to meet expected demands and loads.

Such expected demands may be determined based on the users' profile data **31** managed by the central control system **15,** by analyzing regularly driven routes during the days of the week and during hours of the day. For example, the central control system may be able to predict a high demand for battery exchange services during afternoon to early evening hours in which certain users living in remote locations may need to drive back home from their work locations. As another example, if the central control system is notified about a football match in a remote location which is the destination of a substantial number of users of vehicles **12,** then the battery selection policy provided by the central control system **15** may be adapted to guide the battery pack selection process to reserve an adequate amount of battery packs having energy content sufficient to guarantee such users to safely reach their destination and thereafter return home or approach another BES **10,** if so needed.

Accordingly, the battery pack selection policy may guide the battery selection process to select battery packs which are partially charged and/or being in certain temperature ranges, considered to be safe for reaching the users' destinations, while reserving battery packs with more capacity and/or with greater amounts of charged energies and/or lower temperatures, to meet expected or current demands of long distance drivers.

Additionally or alternatively, the battery selection policy may guide the control unit **lOt** to adapt the battery pack selection process to maintain at all times a desired average amount of charged capacity *(e.g.,* about or above 80%) of all battery packs stored and being charged in the charger and storage apparatus **10c.** In this way the central control system **15** may regulate the energy supplied to users by the battery exchange service and maintain a constant desired level of energy in all BESs **10** available for servicing the vehicles.

After, or simultaneously with, requesting the data profile(s) **(S2),** the control unit **lOt** of the BES requests from the charger and storage apparatus **10c** a status report **(S3)** concerning the charging level of all battery packs **13g** in the charger and storage

apparatus **10c.** The status report from the charger and storage apparatus **10c (S5)** may be provided periodically without requiring the issue of a request **(S3)** in order to continuously provide the control unit **lOt** with updated data concerning charge level of all battery packs **13g** that are being recharged and that are stored after recharge in the charger and storage apparatus **10c.**

Fig. 3E illustrates a data structure **34** of a possible status report **(S5)** provided by the charger and storage apparatus **10c** in some possible embodiments. In this example, the status report includes a plurality of data records **(34a, 34b, 34c, …)** each of which includes data pertaining to a particular battery pack **13g** in the charger and storage apparatus **10c.** An exemplary data record **34a** may include the following information:

- Battery ID **(34al)** indicating the unique one or more identifiers of the battery pack **13g;**
- Maximal capacity **(34a2)** indicating the maximal energy capacity of the battery pack **13g;**
- Charge level **(34a3),** being the level of energy recharged into battery pack **13g,** which may be indicated as the percentage of recharged energy relative to the maximal energy capacity **(34a2)** of the battery pack **13g,** or as the actual amount of energy stored in battery pack *(e.g.* , in Ampere-Hour units);
- Temperature **(34a4)** of the battery pack **13g;**
- Status **(34a5)** indicating whether the battery pack **13g** is currently in the process of being recharged or in storage after a recharge session;
- Health **(34a6)** parameters of battery pack **(13g**)(e.g., number of recharge cycles, internal resistance, actual capacity, discharge rate in unloaded conditions, and such like).

In this way control unit **lOt** of the BES may be updated with information concerning the battery pack inventory, such as the state of charge, state of health and battery temperature status of all battery packs **13g** in exchange apparatus **lOx.** Optionally, the history of the battery packs and their expected maximal capacity and state of health is obtained directly from battery packs **13g** having an internal battery management module (not shown), or retrieved from central control system **15** based on battery pack identifier **34al.**

Once received in the control unit **lOt** of the BES or at the control center **15,** as the case may be, the profile(s) data **(S4)** and the status report **(S5)** are used by the

respective control unit to determine the best match between the available battery packs **13g** and the needs of the user of vehicle **12.** The status report **(S5)** may be further used by the management system *(e.g.,* control unit **lOt** of the BES) to determine a battery selection policy for the BES **10** to allow maintaining a desired average charged energy level of battery packs **13g** in BES **10,** to meet users' requirements during times of high demands for battery exchange services, and/or to equalize the level of wear of all of the battery packs.

In possible embodiments, a battery selection/matching process is employed to provide users with the overall longest driving distances between charging points accessible by the user. For example, the selected battery pack may be the battery pack having the highest state of charge, the lowest battery temperature **(34a4)** and highest state of health *(e.g.,* **34a6** which may indicate newer batteries). The battery pack selection procedure may be adapted to provide battery packs **13g** containing less energy **(34a3),** having higher temperature levels **(34a4)** and lower state of health **(34a6)** to users having smaller energy consumption demands.

For this purpose, the current driving destination **(31e)** data of the users is considered, and if it appears that there is a shortage in fully charged battery packs **13g,** then partially charged battery packs **13g** will be provided to users such that their immediate driving destinations are within the travelable range of the partially charged battery pack **13g** that is selected for the battery exchange.

The service agreement that the user has subscribed for with the service provider as indicated in the service package data set **31d** may be used in certain cases to guide the battery selection procedure. For example, certain service packages **31d** may specify servicing only certain types of battery packs, or battery packs having certain capacities or charge levels. Accordingly, based on the level of service which the user is entitled to, the system may modify the battery selection process to provide a battery pack having higher or lower energy content to the specific user.

The battery pack selection process may take into account the demand of all vehicles **12** that are currently being serviced as well as vehicles **12** that communicated with the central control system **15** via their internal computer **12m** to place an advance notification **(SI')** requesting battery pack exchange service in a specific BES **10** in the near future.

Based on the above, the battery pack selection process attempts to satisfy the requirement of all serviced vehicles **12,** to allow them to reach their current destinations, or other BESs **10** accessible by the vehicles **12** along the route to the destinations, and provide battery packs whose current energy content can fulfill these requirements.

In possible embodiments, the management system *(e.g.,* the control unit **lOt** of BES **10)** optimizes the selection process, such that battery packs **13g** with higher energy content and lower temperatures will be provided to users with typical longer driving distances, in order to minimize battery exchange events. The profile(s) data may be used by control unit **lOt** to determine a battery selection profile specifying the requirements expected from the selected battery pack.

In possible embodiments the profile data **8r** may be collected and analyzed in order to determine a battery selection profile reflecting battery features required from a replenished battery pack to be installed in a specific vehicle used by a specific user. An exemplary battery selection profile **35** is illustrated in **Fig. 3D.** In this example the battery selection profile includes the following data sets: battery type **(35a),** needed amount of energy **(35b),** threshold temperature **(35c),** age and health **(35d),** efficiency **(35e).** These features of the battery selection profile **35** are then used in the battery selection process to find at least one battery pack from the stock of replenished battery packs available in the battery exchange station that complies with the requirements defined in the battery selection profile **35.**

Battery type **(35a)** data set specifies one or more types of battery packs which may be used in the battery exchange process. For example, this data set may include the information indicated in the battery type data set **32a** of the battery profile **32,** and or any number of other types of compatible battery packs matching the needs of the specific vehicle **12** and capable of satisfying a user's needs. Needed amount of energy **(35b)** data set specifies the minimal amount of energy required for satisfying the user and vehicle needs for reaching the target destination.

The threshold temperature **(35c)** data specifies a temperature threshold (T_{thresh}) for the battery pack to be selected. For example, in some possible embodiments the battery selection process is configured to select battery packs whose temperature (T_{batt}) is smaller than some predetermined threshold temperature *i.e.,* $T_{batt} < T_{thresh}$. The threshold temperature **(35c)** defined in the battery selection profile **35** may define different threshold values for different battery selection events. For example, the

threshold temperature **(35c)** may be defined for each battery selection event based on the battery type **(35a),** battery age and health **(35d)** and/or battery efficiency **(35e),** fields of the battery selection profile **35.**

In possible embodiments a preset threshold temperature **(35c)** is defined for all battery selection events. In one exemplary embodiment the preset threshold value is generally in the range of 30°C to 36°C, preferably about 33°C, *i.e.,* to preclude selection of battery packs whose temperatures are higher than 33°C.

Age and health **(35d)** data set specifies possible age and health conditions of the battery pack to be selected. For example, if the user agreement so requires, this data set may define parameters that will guarantee that the condition of the selected battery pack be more or less the same as those of the battery pack **13d** currently installed in the vehicle **12.** In other possible embodiments this data set may define parameters determined to satisfy certain insurance conditions as may be defined in the service package data set **31d.** Efficiency **(35e)** data set specifies a range of expected efficiency values expected for the battery pack to be selected in order to guarantee optimal performance.

Accordingly, the battery selection profile **35** may be used by the management system to extract from the status report **34** a set of candidate batteries complying with the requirements specified in the data sets of the battery selection profile **35.** A battery pack to be installed in the vehicle **12** may be then selected from the set of candidates, for example, by constructing a list of the candidates and sorting it in descending order according to one of the data sets **35a** to **35e** and selecting the uppermost candidate in said list.

It should be clear that other selection methods may be used based on the same inputs in order to satisfy other parameters, as an example, a selection process that aims to equalize the level of wear of all battery packs which are used in the system **17/16.**

Once a suitable battery pack is selected, the control unit **lOt** instructs **(S6)** the battery exchange apparatus **lOx** to use the selected battery pack in the battery exchange process. For example, this may be implemented by simply indicating, to the battery exchange apparatus **lOx,** the identifier *(e.g.,* **34al)** of the selected battery pack. Simultaneously, or shortly thereafter, control unit **lOt** instructs **(S7)** the serviced vehicle **12** to release any battery pack locking mechanism which may be active therein. The battery exchange apparatus **lOx** then proceeds to remove the discharged, or partially

discharged, battery pack **13d** from the serviced vehicle **12,** and installs the selected battery pack **13g** in the vehicle **12.**

After completing the battery exchange process, the battery exchange apparatus **lOx** indicates **(S8)** to the control unit **lOt** that the battery exchange is completed, which thereupon instructs **(S9)** the serviced vehicle **12** to activate the locking mechanism for securing the newly installed battery pack in the battery bay of the vehicle **12.** Simultaneously, or shortly thereafter, the control unit **lOt** reports **(S10)** to the central control system **15** the details of the battery exchange event, which may also include payment information concerning payable fees for charging the user account and/or any fees paid by the user onsite (if any) during the battery exchange process. The battery exchange report **(S10)** sent to the central control system **15** may include the battery profile **32** of the battery pack installed in the serviced vehicle **12.**

The above examples and description have of course been provided only for the purpose of illustration, and are not intended to limit the invention in any way. As will be appreciated by the skilled person, the invention can be carried out in a great variety of ways, employing more than one technique from those described above, all without exceeding the scope of the invention.

CLAIMS:

1. A method for selecting a battery for a vehicle in a battery exchange station, the method comprising:

providing profile data comprising at least user related data associated with a specific vehicle;

providing status data about a plurality of replenished battery packs available in said battery exchange station, said status data comprising at least amount of stored energy in each of the replenished battery packs;

calculating an energy consumption estimation based on said profile data; and

processing said status data and said energy consumption estimate and selecting at least one replenished battery pack from said plurality of replenished battery packs for the specific vehicle.

2. A method according to claim 1, wherein the profile data comprises vehicle related data of said specific vehicle.

3. A method according to claim 1 or 2, wherein the profile data comprises information about driving routes frequently driven by the user.

4. A method according to any one of claims 1 to 3, further comprising determining a target destination of said user based on said profile data, and using said target destination for calculating the energy consumption estimation.

5. A method according to any one of claims 1 to 4, comprising generating a query to the user for determining of a target destination to be used for calculating the energy consumption estimation.

6. A method according to any one of claims 2 to 5, wherein the vehicle related data comprises at least one of the following: vehicle type, vehicle weight and motor efficiency.

7. A method according to any one of claims 1 to 6, wherein the profile data further comprises battery data specifying features of a battery pack currently installed in the vehicle.

8. A method according to claim 7, wherein the battery data includes at least one of the following: battery type, battery age, battery temperature, battery health, battery efficiency, battery identifier.

9. A method according to any one of claims 1 to 8, wherein the profile data comprises at least one of the following: energy replenishment patterns specifying user's patterns of battery exchange and/or recharge; service package data specifying terms and agreement of user subscription; and target destination data specifying at least one target destination of said user.

10. A method according to any one of claims 1 to 9, wherein the status data comprises a plurality of records, each record comprising data indicative of a specific battery pack from the plurality of replenished battery packs available in the battery exchange station, each data record comprising at least one of the following: battery identifier; battery maximal capacity; battery charge level; battery temperature; battery location specifying whether said battery is being recharged or being stored after such recharge; and battery health.

11. A method according to any one of claims 1 to 10, wherein the selecting comprises selecting from battery packs whose temperature is lower than a preset threshold value.

12. A method according to any one of claims 1 to 10, wherein the calculating of energy consumption estimation further comprises determining expected features for battery pack selection, said expected features comprising at least one of the following: battery type or types of compatible battery packs; threshold temperature; battery age; battery health; and battery efficiency, and wherein said selecting is based at least in part on said expected features.

13. A method according to any one of claims 1 to 12, further comprising providing a battery selection policy for introducing additional considerations in the selecting of the at least one replenished battery pack.

14. A method according to claim 13, wherein the additional considerations include reservation of replenished battery packs having a desired level of charged energy or of temperature.

15. A method according to claim 13, wherein the additional considerations include maintaining a desired average level of energy stored in the battery packs available in the battery exchange station.

16. A method according to claim 13, wherein the additional considerations include equalizing the level of wear of all battery packs used.

17. A management system for use in selecting a battery for a vehicle in a battery exchange station, the system comprising:

a memory utility for storing data comprising status data about a plurality of replenished battery packs available in said battery exchange station, said status data comprising at least amount of stored energy in each of the replenished battery packs; and

a processor utility comprising:

an energy consumption estimator module configured and operable for receiving and processing profile data comprising vehicle related data and respective user related data for estimating energy consumption for said vehicle used by said user and generating data indicative thereof; and

a battery selection module configured and operable for receiving and processing said status data and data indicative of the estimated energy consumption, and generating output data indicative of at least one replenished battery pack from said plurality of replenished battery packs selected for the specific vehicle.

18. A system according to claim 17, wherein the profile data comprises vehicle related data of said specific vehicle.

19. A system according to claim 17 or 18, wherein the profile data comprises information about driving routes frequently driven by the user.

20. A system according to any one of claims 17 to 19, wherein the energy consumption estimator module is configured and operable for determining a target destination of said user based on said profile data, and using said target destination for calculating of the energy consumption estimation.

21. A system according to any one of claims 17 to 20, wherein the processor utility is configured and operable for generating a query to the user for determining a target destination for further using said target destination for calculating the energy consumption estimation.

22. A system according to any one of claims 18 to 21, wherein the vehicle related data comprises at least one of the following: vehicle type, vehicle weight and motor efficiency.

23. A system according to any one of claims 17 to 22, wherein the profile data further comprises battery data specifying features of a battery pack currently installed in the vehicle.

24. A system according to claim 23, wherein the battery data includes at least one of the following: battery type, battery age, battery temperature, battery health, battery efficiency, battery identifier.

25. A system according to any one of claims 17 to 24, wherein the profile data comprises at least one of the following: energy replenishment patterns specifying user's patterns of battery exchange and/or recharge; service package data specifying terms and agreement of user subscription; and target destination data specifying at least one target destination of said user.

26. A system according to any one of claims 17 to 25, wherein the status data comprises a plurality of records, each record comprising data indicative of a specific battery pack from the plurality of replenished battery packs available in the battery exchange station, each data record comprising at least one of the following: battery identifier; battery maximal capacity; battery charge level; battery temperature; battery location specifying whether said battery is being recharged or being stored after such recharge; and battery health.

27. A system according to any one of claims 17 to 26, wherein the energy consumption estimator module is configured to select from battery packs which temperature is higher than a preset threshold value.

28. A system according to any one of claims 17 to 26, wherein the energy consumption estimator module is configured and operable for determining expected features for battery pack selection, said expected features comprising at least one of the following: battery type or types of compatible battery packs; battery temperature range; battery age; battery health; and battery efficiency, and wherein said selecting is based at least in part on said expected features.

29. A management system for use in managing battery selection for vehicles in a battery exchange station, the system comprising:

a memory utility accessible from said battery exchange station, said memory utility comprising status data about a plurality of replenished battery packs available in said battery exchange station, said status data comprising at least amount of stored energy in each of the replenished battery packs; and

a control system connectable to said memory utility and connectable to users' service provider utility for receiving profile data comprising vehicle related data and respective user related data, said control system comprising:

an energy consumption estimator module configured and operable for processing said profile data and estimating energy consumption for said vehicle used by said user and generating data indicative thereof; and

a battery selection module configured and operable for receiving and processing said status data and data indicative of the estimated energy consumption, and generating output data indicative of at least one replenished battery pack from said plurality of replenished battery packs selected for the specific vehicle.

30. A management system for use in managing battery selection for vehicles in a battery exchange station, the system comprising:

a control system connectable to a storage device for receiving status data about a plurality of replenished battery packs available in said battery exchange station, said status data comprising at least amount of stored energy in each of the replenished battery packs, and connectable to users' service provider utility via a communication network for receiving profile data comprising vehicle related data and respective user related data, said control system comprising:

an energy consumption estimator module configured and operable for processing said profile data and estimating energy consumption for said vehicle used by said user and generating data indicative thereof; and

a battery selection module configured and operable for receiving and processing said status data and data indicative of the estimated energy consumption, and generating output data indicative of at least one replenished battery pack from said plurality of replenished battery packs selected for the specific vehicle.

31. A management system for use in managing battery selection for vehicles in a battery exchange station, the system comprising:

a server system connected to a communication network, said server system comprising:

a data input utility for receiving and identifying a request data indicative of a request of a user of a vehicle at the battery exchange station;

a first communication utility for communicating with a storage device and receiving status data about a plurality of replenished battery packs available in said battery exchange station, said status data comprising at least amount of stored energy in each of the replenished battery packs,

a second communication utility for communicating with a users' service provider utility for receiving profile data comprising vehicle related data and respective user related data, and

a processor system comprising: an energy consumption estimator module for processing said profile data and estimating energy consumption for said vehicle used by said user and generating data indicative thereof; and a battery selection module for processing said status data and data indicative of the estimated energy consumption, and generating battery selection data indicative of at least one selected replenished battery pack from a plurality of replenished battery packs at said battery exchange station selected for said vehicle.

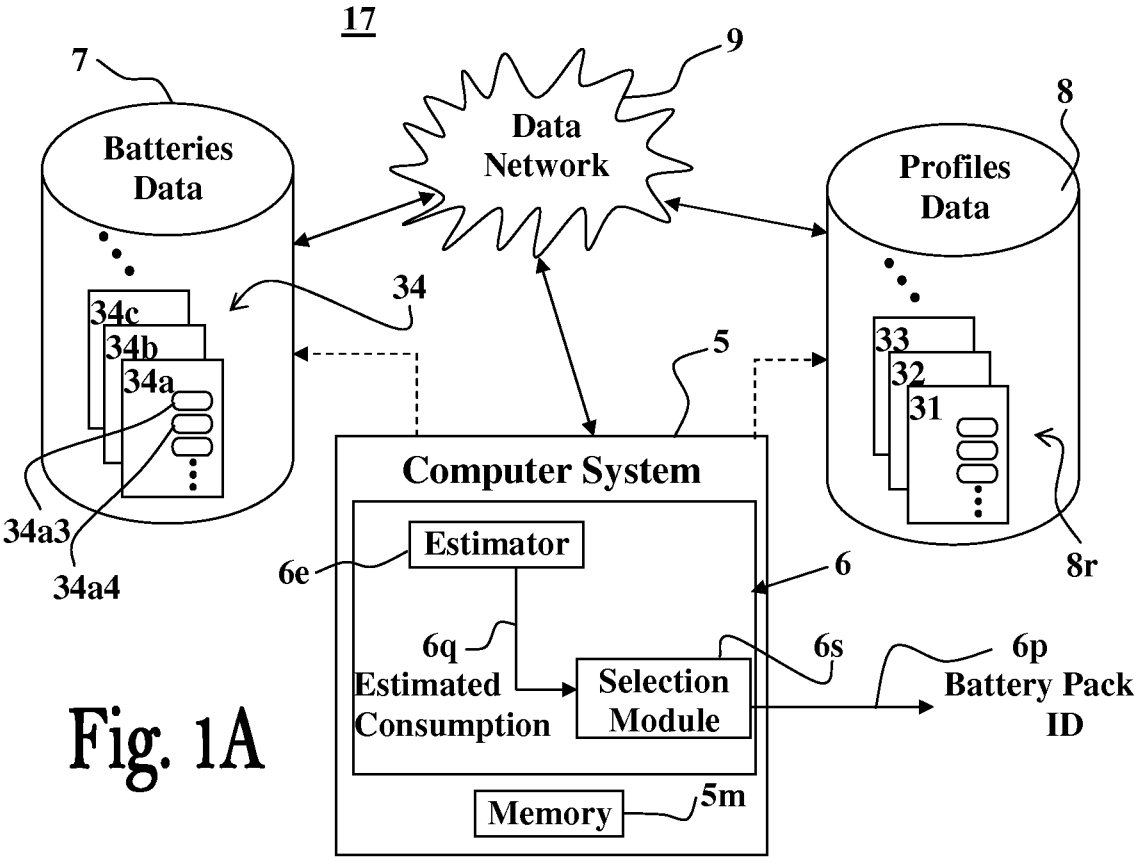
17
7
Batteries Data
9
Data Network
8
Profiles Data
34
34c
34b
34a
34a3
34a4
5
33
32
31
8r
Computer System
Estimator
6e
6
6q
Estimated Consumption
Selection Module
6s
6p
Battery Pack ID
Memory
5m

Fig. 1A

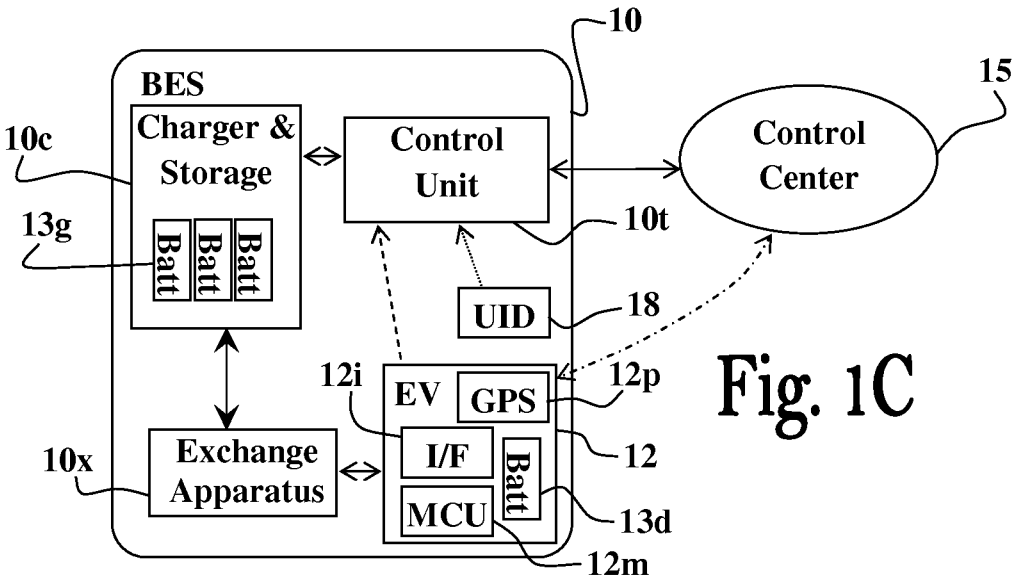
10
BES
Charger & Storage
10c
13g
Batt
Batt
Batt
Control Unit
10t
15
Control Center
UID
18
12i
EV
GPS
12p
I/F
12
Batt
MCU
13d
12m
Exchange Apparatus
10x

Fig. 1C

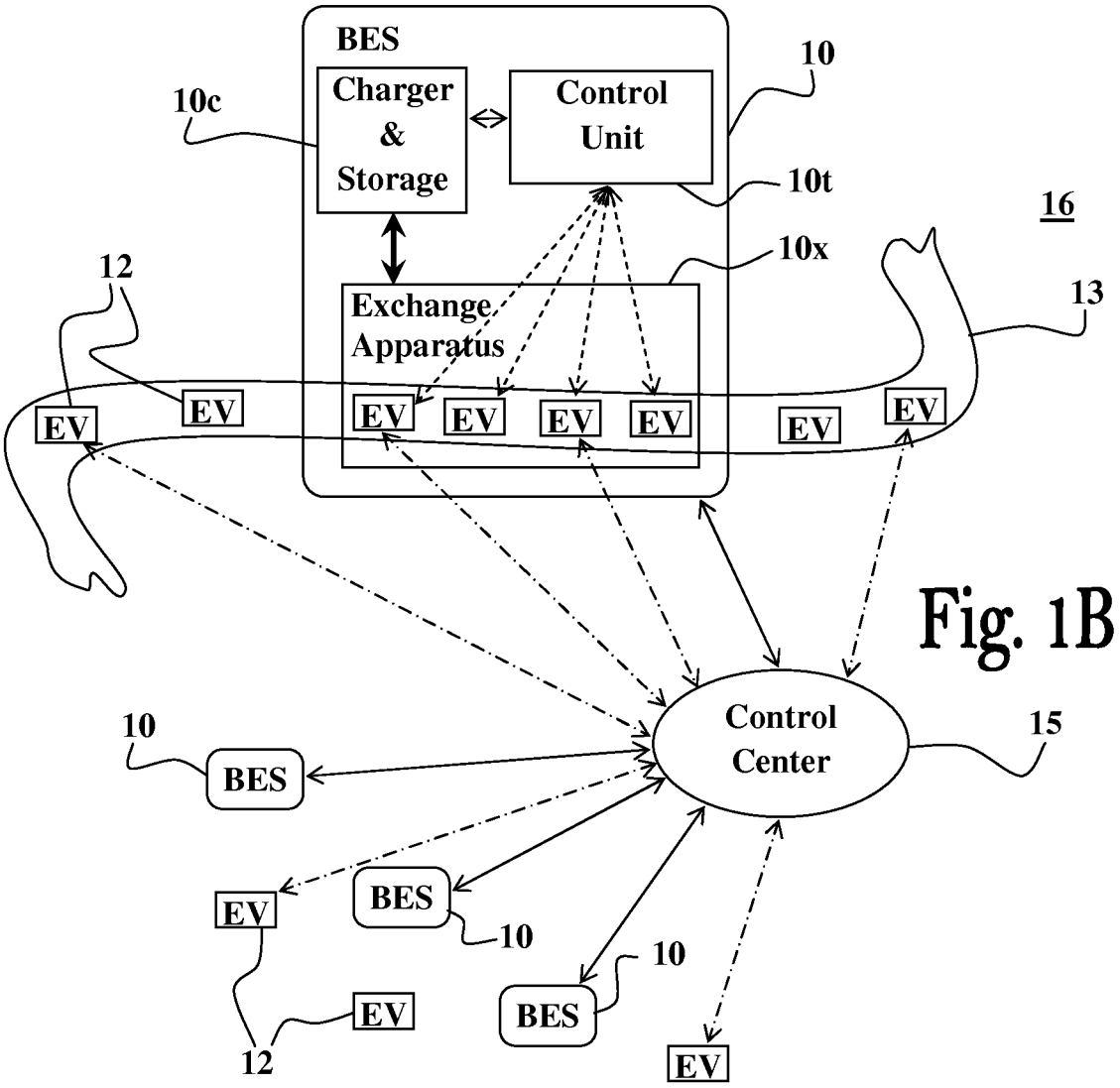
BES
Charger & Storage
Control Unit
10
10c
10t
16
10x
12
13
Exchange Apparatus
EV
EV
EV
EV
EV
EV
EV
EV
Control Center
15
10
BES
EV
BES
10
10
BES
EV
12
EV

Fig. 1B

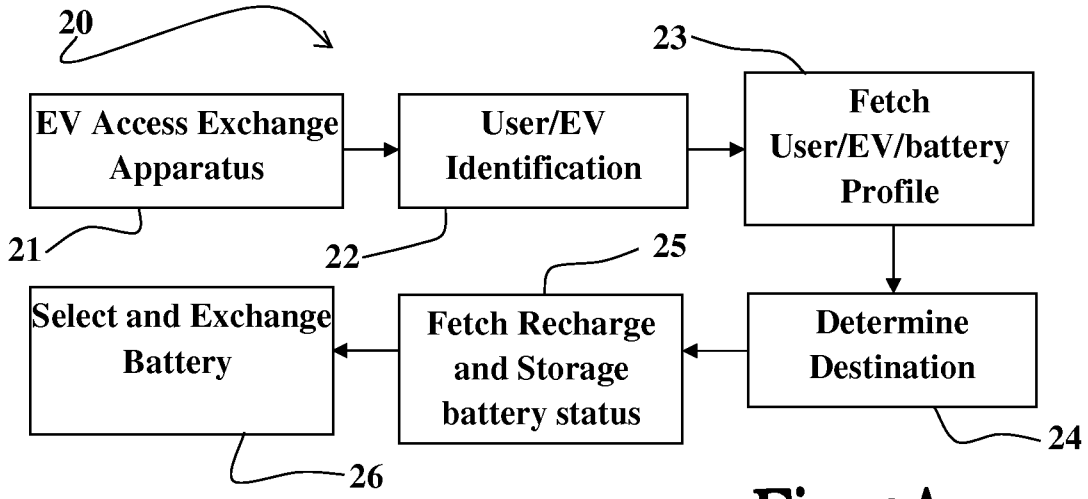
20
23
EV Access Exchange Apparatus
User/EV Identification
Fetch User/EV/battery Profile
21
22
25
Select and Exchange Battery
Fetch Recharge and Storage battery status
Determine Destination
24
26

Fig. 2A

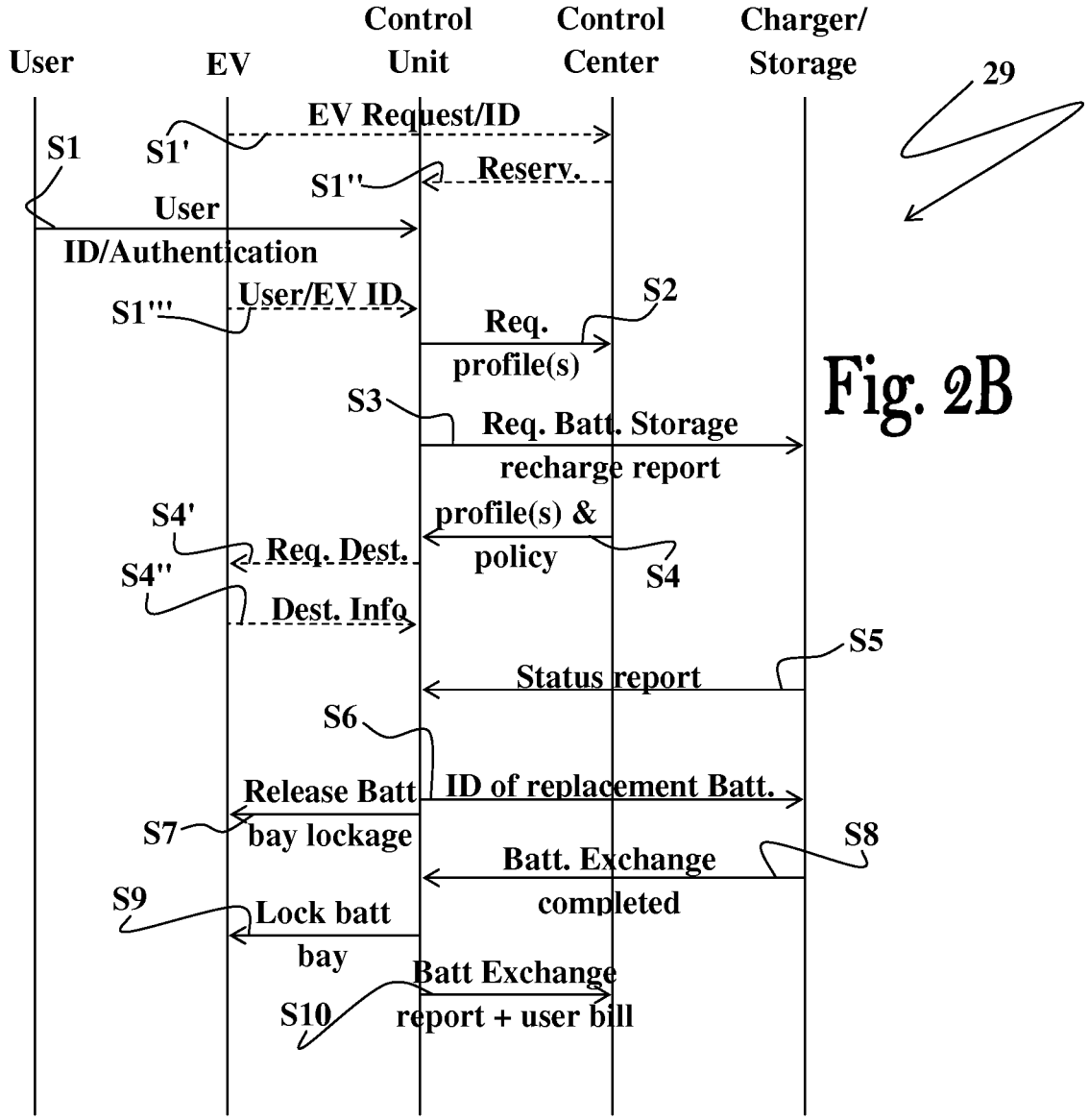
User
EV
Control Unit
Control Center
Charger/ Storage
29
EV Request/ID
S1
S1'
S1''
Reserv.
User ID/Authentication
S1'''
User/EV ID
S2
Req. profile(s)
S3
Req. Batt. Storage recharge report
S4'
Req. Dest.
S4''
Dest. Info
profile(s) & policy
S4
S5
Status report
S6
Release Batt bay lockage
ID of replacement Batt.
S7
S8
Batt. Exchange completed
S9
Lock batt bay
Batt Exchange report + user bill
S10

Fig. 2B

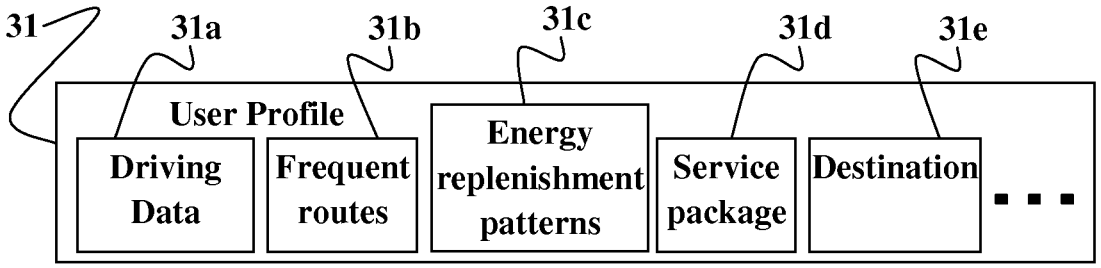
31
31a
31b
31c
31d
31e
User Profile
Driving Data
Frequent routes
Energy replenishment patterns
Service package
Destination
...

Fig. 3A

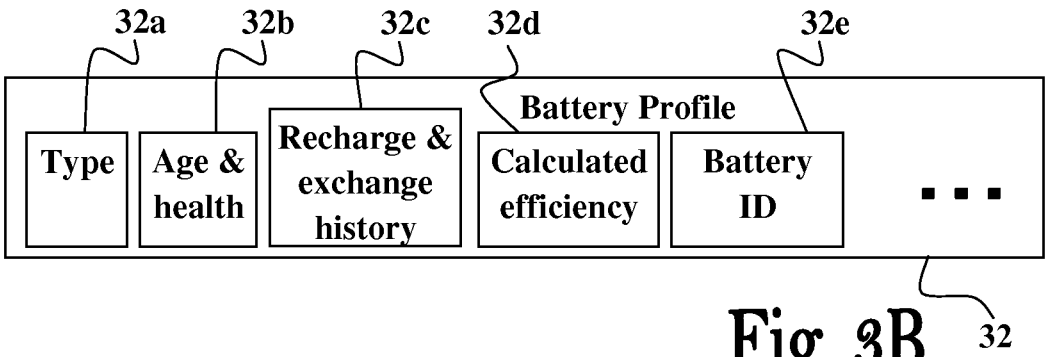

Fig. 3B

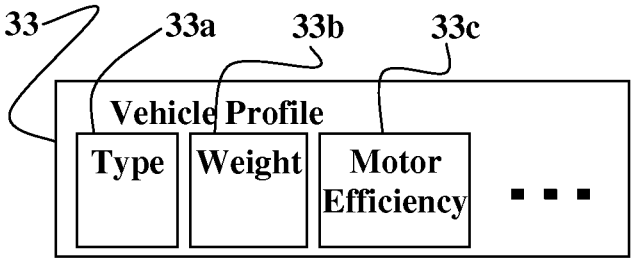

Fig. 3C

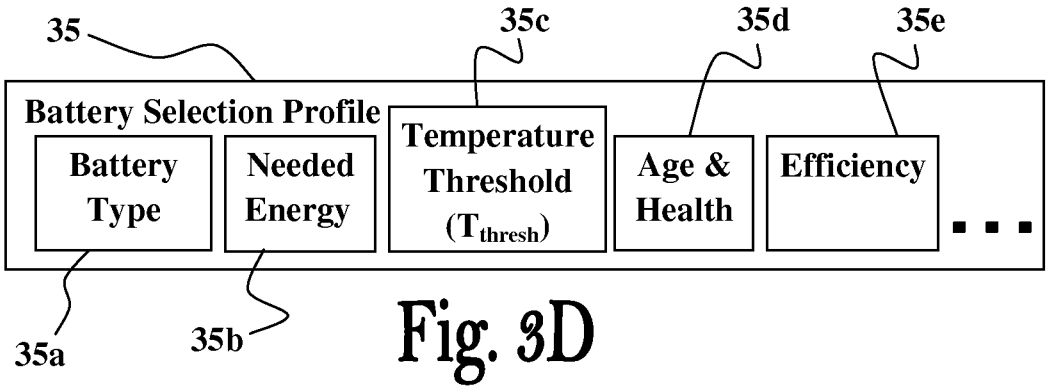

Fig. 3D

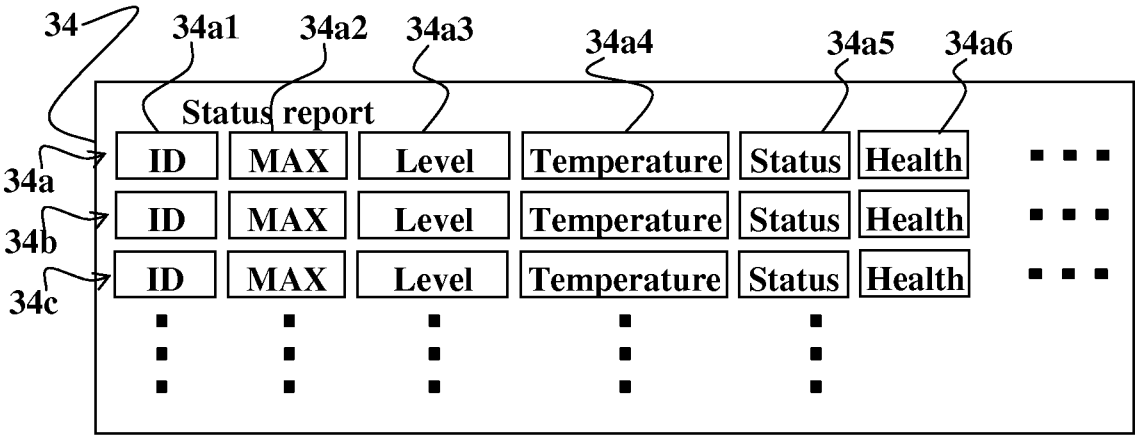

Fig. 3E

INTERNATIONAL SEARCH REPORT

International application No.
PCT/IL2012/050490

A. CLASSIFICATION OF SUBJECT MATTER
IPC (2013.01) G06Q 10/00, B60L 11/00

According to International Patent Classification (IPC) or to both national classification and IPC

B. FIELDS SEARCHED

Minimum documentation searched (classification system followed by classification symbols)
IPC (2013.01) G06Q 10/00, B60L 11/00, B60L 11/12, B60L 11/18

Documentation searched other than minimum documentation to the extent that such documents are included in the fields searched

Electronic data base consulted during the international search (name of data base and, where practicable, search terms used)
Databases consulted: USPTO, Esp@cenet, Google Patents

C. DOCUMENTS CONSIDERED TO BE RELEVANT

Category*	Citation of document, with indication, where appropriate, of the relevant passages	Relevant to claim No.
Y	JP 2010272142 A Tomonaga 05 Aug 2010 (2010/08/05) whole	1-3 1
Y	WO 201 1138205 A Pettersson 10 Nov 201 1 (201 1/1 1/10) whole	1-3 1
Y	US 20100094496 A Hershkovitz 15 Apr 2010 (2010/04/15) whole	1-3 1
A	US 20090082957 A Agassi 26 Mar 2009 (2009/03/26) whole	1-3 1
A	JP 201 1096233 A Suganuma 12 May 201 1 (201 1/05/12) abstract,figsl,2	1-3 1

☐ Further documents are listed in the continuation of Box C. ☒ See patent family annex.

* Special categories of cited documents:
"A" document defining the general state of the art which is not considered to be of particular relevance
"E" earlier application or patent but published on or after the international filing date
"L" document which may throw doubts on priority claimis) or which is cited to establish the publication date of another citation or other special reason (as specified)
"O" document referring to an oral disclosure, use, exhibition or other means
"P" document published prior to the international filing date but later than the priority date claimed

"T" later document published after the international filing date or priority date and not in conflict with the application but cited to understand the principle or theory underlying the invention
"X" document of particular relevance; the claimed invention cannot be considered novel or cannot be considered to involve an inventive step when the document is taken alone
"Y" document of particular relevance; the claimed invention cannot be considered to involve an inventive step when the document is combined with one or more other such documents, such combination being obvious to a person skilled in the art
"&" document member of the same patent family

Date of the actual completion of the international search	Date of mailing of the international search report
19 Mar 2013	2 1 Mar 2013
Name and mailing address of the ISA; Israel Patent Office Technology Park, Bldg.5, Malcha, Jerusalem, 9695101, Israel Facsimile No. 972-2-5651616	Authorized officer GUTKIN Solomon Telephone No. 972-2-5651763

INTERNATIONAL SEARCH REPORT
Information on patent family members

International application No.
PCT/IL2012/050490

Patent document cited search report	Publication date	Patent family member(s)	Publication Date
JP 2010272142 A	05 Aug 2010	NONE	
WO 2011138205 A	10 Nov 2011	NONE	
US 20100094496 A	15 Apr 2010	NONE	
US 20090082957 A	26 Mar 2009	NONE	
JP 2011096233 A	12 May 2011	NONE	