Dec. 15, 1964 E. BAGNOLI ETAL 3,161,484

TEMPERATURE CONTROL SYSTEM FOR HEAT TREATMENT OF RUNNING YARN LINES

Filed Nov. 16, 1960 3 Sheets-Sheet 1

FIG. 1

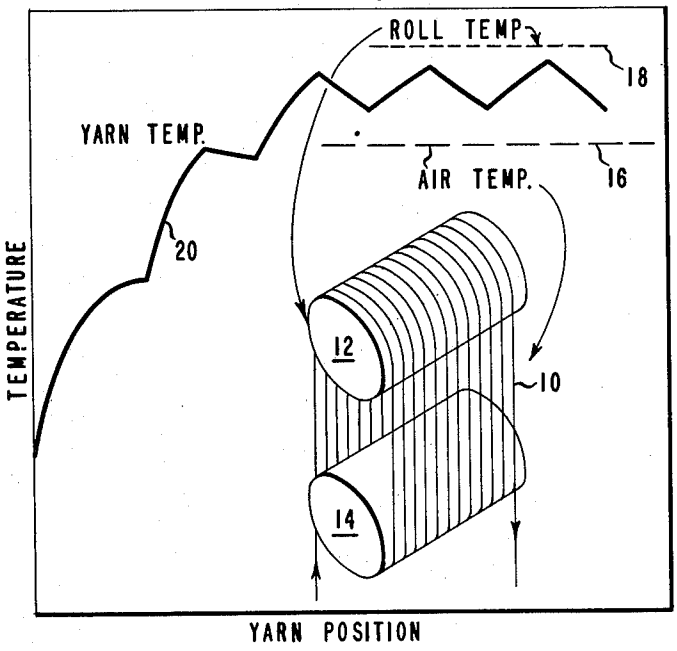

FIG. 2

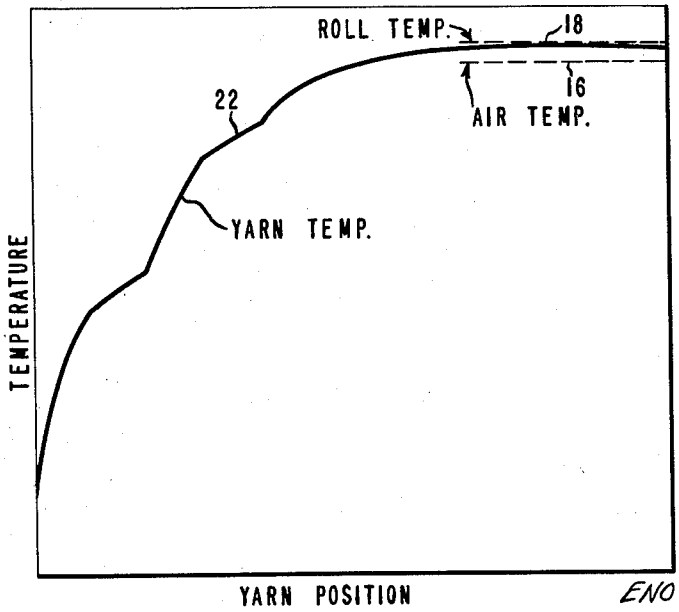

INVENTOR
ENO BAGNOLI
SHELDON ERWIN ISAKOFF

BY Harry E. Braddock
ATTORNEY

FIG. 3

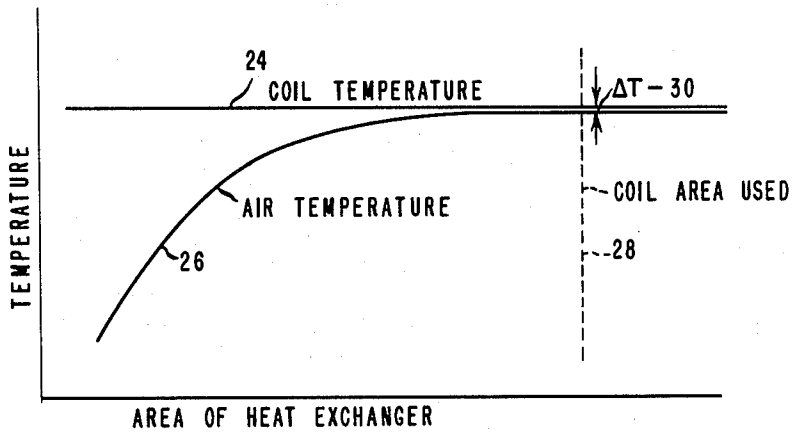

FIG. 4

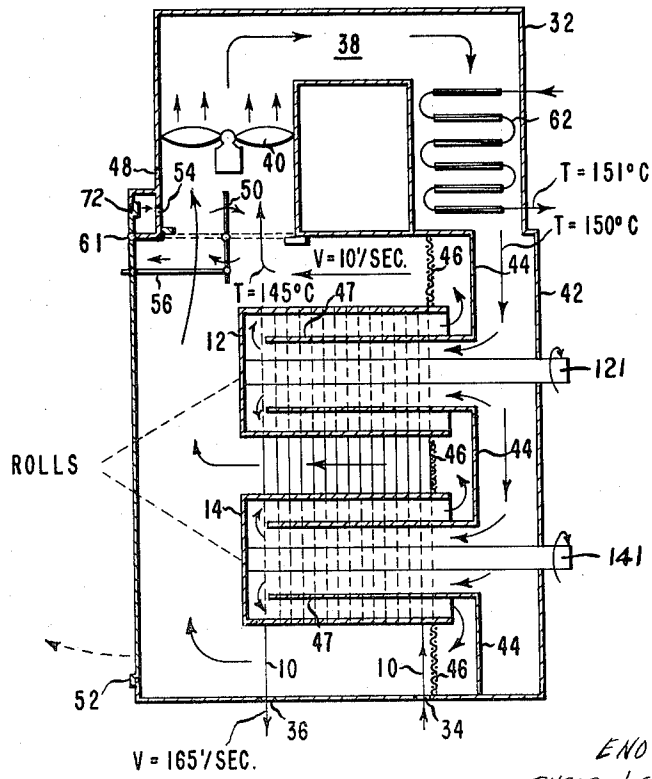

INVENTOR
ENO BAGNOLI
SHELDON ERWIN ISAKOFF

BY Harry E. Braddock
ATTORNEY

Dec. 15, 1964 E. BAGNOLI ETAL 3,161,484
TEMPERATURE CONTROL SYSTEM FOR HEAT TREATMENT OF RUNNING YARN LINES
Filed Nov. 16, 1960 3 Sheets-Sheet 3

FIG. 5

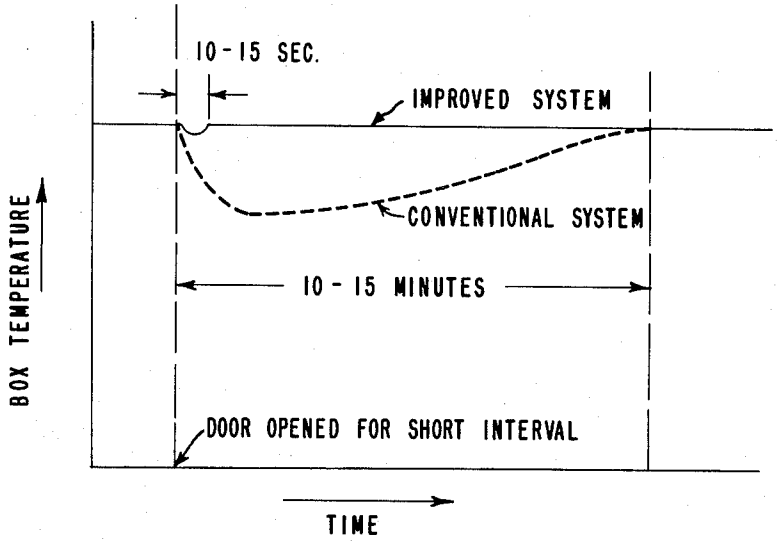

INVENTOR
ENO BAGNOLI
SHELDON ERWIN ISAKOFF
BY Harry E. Braddock
ATTORNEY

United States Patent Office 3,161,484 Patented Dec. 15, 1964

3,161,484

TEMPERATURE CONTROL SYSTEM FOR HEAT TREATMENT OF RUNNING YARN LINES

Eno Bagnoli, Newark, and Sheldon E. Isakoff, Wilmington, Del., assignors to E. I. du Pont de Nemours and Company, Wilmington, Del., a corporation of Delaware

Filed Nov. 16, 1960, Ser. No. 69,651
3 Claims. (Cl. 34—114)

This invention is concerned generally with an improved arrangement for heat treating temperature-sensitive yarns under conditions which provides very precise control of yarn temperature. More particularly, it is concerned with an improved method of heating yarns by passing the yarns over heated rolls which are contained in a heating chamber and maintaining the temperature of the chamber and the rolls very close together.

The heat treatment of yarn determines the degree of crystallinity, shrinkage level, and dyeability. Precise control of yarn temperature is required to insure the uniformity of these properties. Typically, the manufacture of synthetic fibers is carried on in a plant which has a number of yarn treatment machines. Each machine may have many positions. In order to avoid defects in finished fabrics, particularly with respect to shrinkage and dyeability, it is necessary that the yarn produced in all the positions have substantially identical properties. This requires that the system used to heat yarn must maintain exceptionally uniform yarn temperatures from position-to-position and from time-to-time at any given position.

Many methods are used today for heating yarns, electrically heated pins, shoes, or rolls, air or steam chambers, etc. Each of these are deficient in that they cannot satisfactorily maintain the temperature constant within the limits required under various influences tending to upset the desired heat conditions such as cold air currents introduced into the operating zone, and heat losses in other ways both in each individual position and from position-to-position. These systems do not recover rapidly enough when disturbed by external conditions to prevent creation of excessive amounts of improperly treated and unsalable product. Although direct steam and direct electric heater roll systems can be made to achieve reasonably close temperature control, it has been found that direct condensing steam systems are expensive initially and are very difficult and expensive to maintain at high speed. Direct electric heated systems, on the other hand, have been found subject to excessive equipment failures and unreliable on a multiposition basis. In addition, short useful temperature recovery times can be obtained with these systems only under open unenclosed conditions where the air temperature quickly reaches equilibrium from no load to load conditions. Heat losses are high and costly in such systems. When such systems are closely enclosed they suffer excessively long temperature recovery times. Other conventional systems such as stationary electric cores and steam core rolls have relatively poor temperature control and long temperature recovery times when heat conditions are disturbed.

It is one object of this invention to provide an improved arrangement for maintaining the yarn temperature from position-to-position within such close tolerance limits that the yarn produced in the various positions can be merged or combined without any adverse effects.

Another object is the provision of an improved method of maintaining rotating hot rolls in a heating chamber at a temperature close to the condensing vapor temperature of the heat exchanger.

Another object is to provide an improved arrangement for maintaining sufficient flow of heat transfer medium (air) and with a heat exchanger of such a size that the heat transferred from the heat transfer medium causes

substantially no change in the temperature of the medium as it goes from the heat exchanger through the heating chamber.

Another object of this invention is to provide such an improved system utilizing simple, low cost, reliable components.

Yet another object is to provide an arrangement which prevents cool room air from entering the yarn entry or exit ports, or any other permanent opening.

Yet another object is to provide an improved system which minimizes the effect of opening the enclosure door during the string-up of yarn over the rolls.

With these and other objects in view, the method for heat treating temperature-sensitive yarn consists of an arrangement which involves passing the yarn over a plurality of rolls and subjecting the inside of the rolls, the outside of the rolls, the exterior of the yarn, and the surrounding atmosphere to the effects of an excessive amount per unit time of a heat transfer medium of closely controlled temperature so that the heat transferred from the medium causes only negligible change or very little drop in the temperature of the medium.

The apparatus of the improved arrangement essentially comprises an oversized heat exchanger, a plurality of rolls, a circulating fan, an enclosure and suitable passageways to direct the heating medium to pass in sequence over the inside of the rolls, the outside of the rolls, the exterior of the yarn and through a substantially closed circuit in the enclosure, a door on the enclosure for string-up, and means associated with the door to reduce the flow of heating medium through the enclosure when the door is open. The method and apparatus will be explained more fully in the following disclosure. Additional advantages and objects will appear from a consideration of the specification, claims and accompanying drawings in which:

FIGURE 1 is a graphical presentation of the yarn temperature vs. the yarn position for a conventional system.

FIGURE 2 is a graphical representation of the yarn temperature vs. the yarn position for the instant invention.

FIGURE 3 is a graphical representation of the coil and air temperature vs. the heat exchanger area.

FIGURE 4 is a diagrammatic side elevational view, partially in section, of a system embodying features of this invention.

FIGURE 5 is a graphical repreesntation of a comparison of the variations in temperature level against time as the door is opened in a conventional enclosed system and in the enclosed system of this invention.

Referring now to FIGURE 1 of the drawings, it is seen that a moving thread line 10 passes over heated roll elements 12 and 14 which are separated. As it does so, the air temperature and the roll temperature affect the temperature of the yarn as it passes over and between the rolls. FIGURE 1 also shows a plot of the temperature of any given point on the yarn 10 as it first enters the heat-treating section and passes over roll 12, through the air, around roll 14, through the air again and over roll 12 as many times as are required in the particular conventional process. When the air temperature and the roll temperature differ greatly as indicated by curves 16 and 18 respectively, it will be seen that the yarn temperature oscillates as the yarn first touches the hotter roll and then is cooled off as it enters the air. Curve 20 shows this temperature variation. In a number of manufacturing operations, such temperature variation is undesirable.

FIGURE 2 shows a graphical representation of the variation of yarn temperature vs. the yarn position on the heat-treating rolls when the air temperature, shown as

curve 16, is controlled according to the arrangement of the present invention and is maintained extremely close to the roll temperature, shown as curve 18. According to the arrangement of this invention, there is no significant oscillation of the yarn temperature in the heat-treating action and, by accurately maintaining the roll temperature and air temperature, the final yarn temperature is closely controlled.

The roll temperature is controlled accurately by a system described in detail later. The air temperature is closely controlled within very small limits by using a heat exchanger with a sufficient amount of area to maintain the tempertaure difference between the coil temperature of the heat exchanger and the air at a minimum and by using a high air circulation rate, as explained later. FIGURE 3 shows a plot of the temperature vs. the area of the heat exchanger. Curve 24 indicates that the coil temperature is maintained constant in the preferred embodiment. This is done by a vapor condensing system such as steam whereby the temperature is controlled by controlling the pressure of the condensing vapor. Curve 26 is a plot of the temperature of the air as it leaves the heat exchanger vs. the area of the heat exchanger. If the area is small, there is a large termperature difference between the coil temperature, 24, and the air temperature, 26. As the area of the heat exchanger is increased for the same amount of air flowing, the temperature difference, Δt, (30) is reduced. This effect is utilized to advantage in the system of the instant invention. The operating point selected in practicing this invention is shown by dotted line 28. This is a point where the Δt (30) is at a negligibly small optimized minimum. By using a condensing vapor and controlling the temperature by controlling the pressure, a large number of heat exchangers in a bank of units on a large machine can be maintained at identical temperatures very simply. This is necessary where the product from position-to-position must be merged or combined without adverse effects. As is well known to those skilled in the art; in a condensing vapor heating means wherein the temperature at which the vapor condenses is held constant by holding the pressure at the desired level, a variation in the heating demands upon the heating means (represented by a rise or fall in the input temperature of the medium to be heated) merely affects the amount of the vapor which condenses which varies the amount of heat (of condensation) given out by the heating means. The condensing vapor heating means utilized in this invention operates in this conventional self-controlling manner.

FIGURE 4 shows one embodiment of the system of this invention in somewhat diagrammatic presentation. Two skewed rotatably driven heated roll elements 12 and 14 are supported on rotatably mounted shafts 121 and 141 inside an enclosure or casing 32. The shafts are driven by conventional driving means, not shown. Openings 34 and 36 are provided for yarn entrance and exit. A blower 40, heat exchange unit 62, and a series of passageways are arranged to form a substantially closed circuit which directs a heated medium from the heat exchanger into the interior of roll elements 12 and 14 through inner concentric axially aligned tubular elements 47, thence along the exterior of the roll elements and over the yarn back to the inlet side of blower 40. An access door 52 is provided for the casing and is pivotally mounted at 61. Door 52 is connected by a suitable linkage 56 a pivoted damper of vane 50 which is mounted in the air return line to the blower 40. The yarn line 10 to be treated is passed over rolls 12 and 14 a number of times, entering the enclosure 32 through opening 34 and leaving through opening 36. Heat transfer medium 38, normally air, is circulated through the enclosure by blower 40, first passing through heat exchanger 62, then through a system passageways defined by wall elements of baffles 42, 44, and 47, which direct the transfer medium 38 to the inside of rolls 12 and 14 along their inner edge and then along the outside

of the hot rolls 12 and 14, over the yarn surface, and back to the blower 40. Baffle elements 46 are perforated members arranged in such a manner that the air is directed both across the yarn line, the outer periphery of the hot rolls 12 and 14 and also along the walls of the enclosure 32. This serves to control the amount of air flow on the yarn proper and to direct sufficient heat transfer medium against the outer walls of the enclosure 32 to minimize the effect of loss of heat energy to the outside which would affect the temperature of the rolls 12 and 14 and the yarn 10.

The flow rate of the heat transfer medium 38 is maintained at such a high level and the area of the heat exchanger 62 is of such a large size that the desired temperature of the heat transfer medium 38 is maintained very accurately within small allowable limits from the time it leaves the exchanger until it returns to the exchanger, that is, so that its temperature is substantially unchanged due to heat transfer to the yarn, losses through the machine structure, or due to temporary opening of the enclosure access door.[1]

To prevent any outside cool air currents from entering openings 34 and 36 or any other openings that may exist, the entire enclosure 32 is kept under a slight positive pressure. This is done by having a small air inlet opening 48 near the suction to blower 40.

One of the strict requirements in obtaining product which is mergible from position-to-position and from time-to-time on one position is that the temperature be maintained continuously under all conditions. Obviously, when the enclosure access door 52 is opened to string-up the wraps of yarn 10 around rolls 12 and 14, the system has a tendency to become unbalanced. Ordinarily, until a system has restabilized, all yarn passing through this equipment is inferior due to the varied heat treatment and normally would be not sellable. Consequently, it is important for efficient operation that a system stabilize as rapidly as possible once the door is closed and the yarn wrap-up is completed. With older systems, this stabilization time often was in the order of minutes. In this system the temperature drop has been greatly reduced and the stabilization time has been reduced to seconds. This is very important for the efficient operation of a plant, especially with yarn speeds of the order of 3,000 yards per minute.

When access door 52 is opened, damper 50, which is linked to and actuated by the door movement moves toward its closed position and acts to prevent cold air from being pulled in, by blower 40, through the door opening and cooling the rolls 12 and 14 and the enclosure 32 by diverting heated medium from the blower 40 and roll elements out the door. In addition, when door 52 is opened, auxiliary air inlet 54 is opened by movement of a portion 72 of door 52 which acts as a valve means to permit the blower 40 to receive therefrom and to circulate a reduced amount of heat transfer medium 38 through the heat exchanger 62, through the rolls 12 and 14, past baffles, 44, 46, and 47 and out the door opening. Thus, the interior of enclosure 32 is effectively maintained at the desired temperature, the exchanger being such that the needed heat is provided with only a negligible temperature drop at the exchanger.

Any suitable type of blower unit may be used for blower 40. Likewise, any suitable conventional heat exchanger can be used for heat exchanger 62. Hot roll elements 12 and 14 are shown as straight cylindrical rolls generally parallel to each other. These roll elements may be of any of the usual type, either cylindrical or tapered and which are canted or skewed in any manner.

It will be seen that an improved arrangement has been provided which achieves precise temperature control and short temperature recovery times from disturbing influ-

[1] The values shown on the drawings are representations of the heat treatment of a polyester yarn in accordance with the principles of this invention.

ences, utilizing a hot air system and simple, low cost components.

Since modifications will be obvious to those skilled in the art, such changes as are within the spirit and scope of this invention are intended to be covered by the following claims.

We claim:

1. An apparatus for the heat treatment of a running yarn line comprising a housing defining a heat treatment zone and a high volumetric flow rate pressurized air flow conduit having an inlet portion and an outlet portion, an air blower means positioned in said air flow conduit capable of circulating a high volume of air per unit time, relative to the volume of said zone and relative to the velocity of said moving yarn line, through said conduit, a variable high output, large heat transfer area, and constant temperature heat exchange unit comprising a vapor condensing heat exchanger positioned in said conduit, for continuously supplying heat to the circulating air, the velocity and displacement rate of said circulating air being of such a magnitude, and the heat output capacity of the heat exchanger being such that the temperatures of the moving air in said zone and of a yarn line moving through said zone are substantially the same and maintained substantially constant during heat transfer from the air to the yarn and heat losses from the zone, said apparatus further comprising a plurality of hollow rotatable roll elements supported in said zone to contact and guide the running yarn line in a tortuous path through said zone, the outlet portion of said air flow conduit connected to a circulating air distributing means which directs the heated air first into the interior of said roll elements to maintain them at a constant temperature substantially that of the heated air, and secondly against and over the outer surfaces of said elements and said yarn line in said zone to maintain the outer surface of the roll elements and the yarn line at substantially the same constant temperature as the heated air, conduit means connecting said zone to the inlet portion of said air flow conduit, means for directing a portion of said heated air through an opening in said housing joining the zone with the atmosphere outside said housing and auxiliary means for concurrently adding an amount of outside air to said inlet portion of said conduit system to compensate for the portion of the heated air directed through said opening, said heater constructed and arranged to increase its output in response to the presence of the outside air in the conduit to bring the air admitted by the auxiliary means to said constant temperature level of the circulating air and maintain the temperature in said zone substantially at its constant level.

2. The apparatus of claim 1 in which said housing defining said heat treatment zone is provided with an access door in said opening and said means for directing a portion of heated air through said opening in the housing comprises a damper means in said inlet portion of said conduit, said damper means normally positioned to permit free flow of air through said conduit and actuatable by opening movement of said access door to move toward a position closing off the inlet portion of said conduit and forcing the heated air entering the heat treatment zone to move out through the access door opening.

3. The apparatus of claim 2 in which said auxiliary means comprises a passageway connecting the inlet portion of said conduit with the atmosphere outside said housing, a normally closed valve means in said passageway and actuated by opening movement of said access door to open said passageway and admit a limited amount of outside air into said inlet portion of said conduit.

References Cited in the file of this patent

UNITED STATES PATENTS

1,574,057	Powers	Feb. 23, 1926
1,770,409	Kehoe	July 15, 1930
2,309,961	King	Feb. 2, 1943
2,499,141	Helmus	Feb. 28, 1950
2,596,358	Ball	May 13, 1952
2,821,030	Bogaty	Jan. 28, 1958

FOREIGN PATENTS

327,898	Germany	Oct. 19, 1920