United States Patent [19]

Brown

[11] **3,742,563**

[45] **July 3, 1973**

[54] **APPARATUS FOR HANDLING CYLINDRICAL MEMBERS**

[76] Inventor: **Cicero C. Brown,** 8490 Katy Freeway, Houston, Tex. 77024

[22] Filed: **Feb. 24, 1972**

[21] Appl. No.: **229,041**

[52] **U.S. Cl.** ..... **24/263 DH,** 24/263 DL

[51] **Int. Cl.** **E21b 19/06**

[58] **Field of Search** ..... 24/249 DP, 263 D, 24/263 DT, 263 DG, 263 DH, 263 DL

[56] **References Cited**

UNITED STATES PATENTS

717,630	1/1903	Seed et al.	24/249 DP UX
1,844,378	2/1932	Campbell	24/249 DP
2,144,146	1/1939	Driscoll	24/263 DT
2,317,306	4/1943	Smith	24/263 DG UX
2,351,887	6/1944	Steadman	24/263 DH
2,567,044	9/1951	Wilson	24/263 DL UX

Primary Examiner—Donald A. Griffin
Attorney—Carlos A. Torres and Bill B. Berryhill

[57] **ABSTRACT**

Apparatus for handling cylindrical members such as pipe comprising: a support frame; a housing mounted on the support frame, having a central opening therethrough and being split into two halves transversely movable to and from a first position adjacent each other and a second position apart from each other; and a gripping assembly carried by the housing and disposed in its central opening for alternate gripping engagement and disengagement with a cylindrical member in the first and second positions, respectively. The gripping assembly includes a set of slips and wedges by which the slips are wedged into gripping engagement with the cylindrical member upon the application of force along the axis of the member. The wedges and the housing are provided with cooperable cam apparatus by which the slips may be wedged into tighter gripping engagement with the cylindrical member upon application of a torque to the member.

25 Claims, 6 Drawing Figures

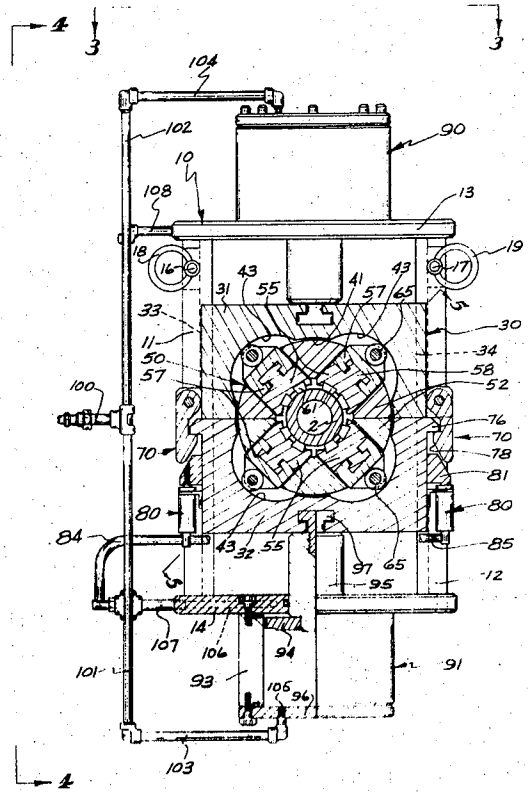

PATENTED JUL 3 1973

3,742,563

SHEET 1 OF 2

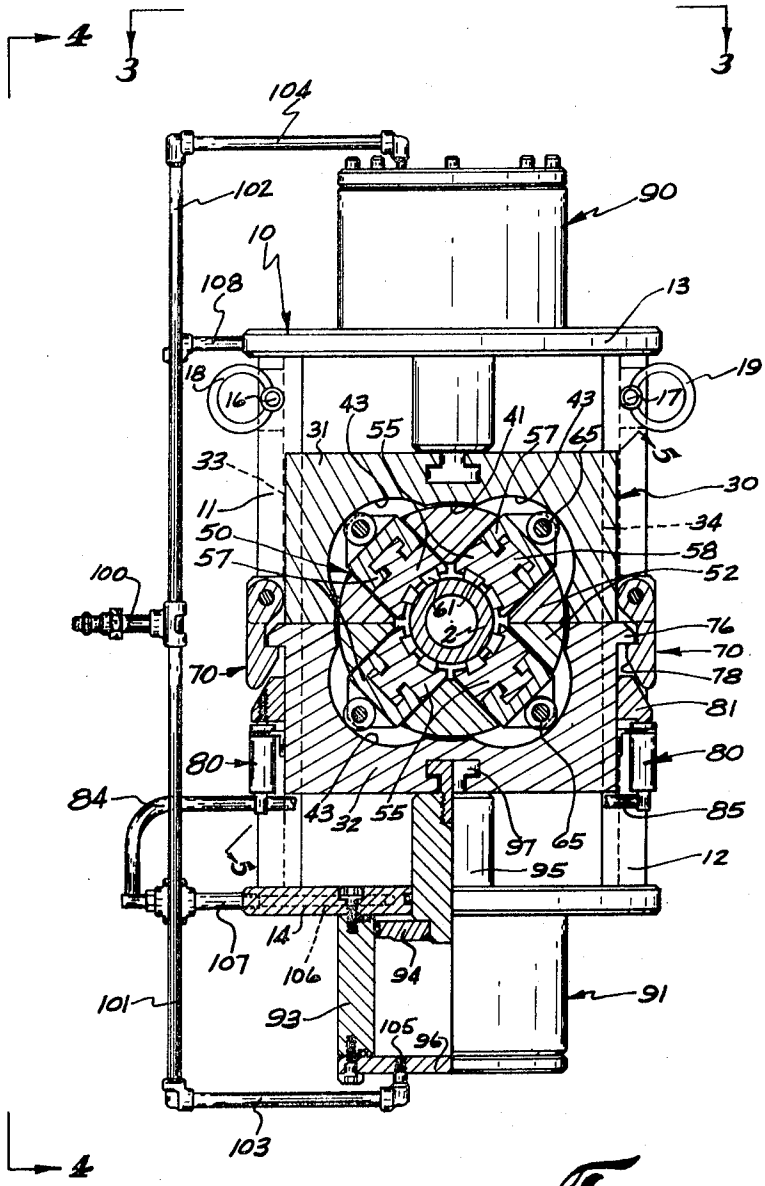

Fig. 1

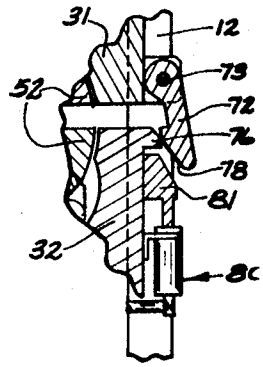

Fig. 2

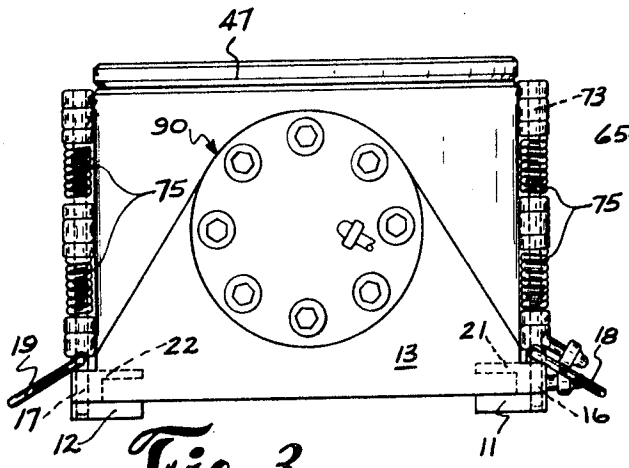

Fig. 3

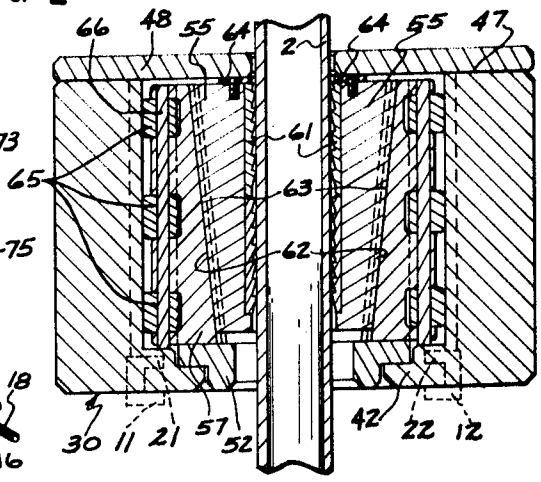

Fig. 5

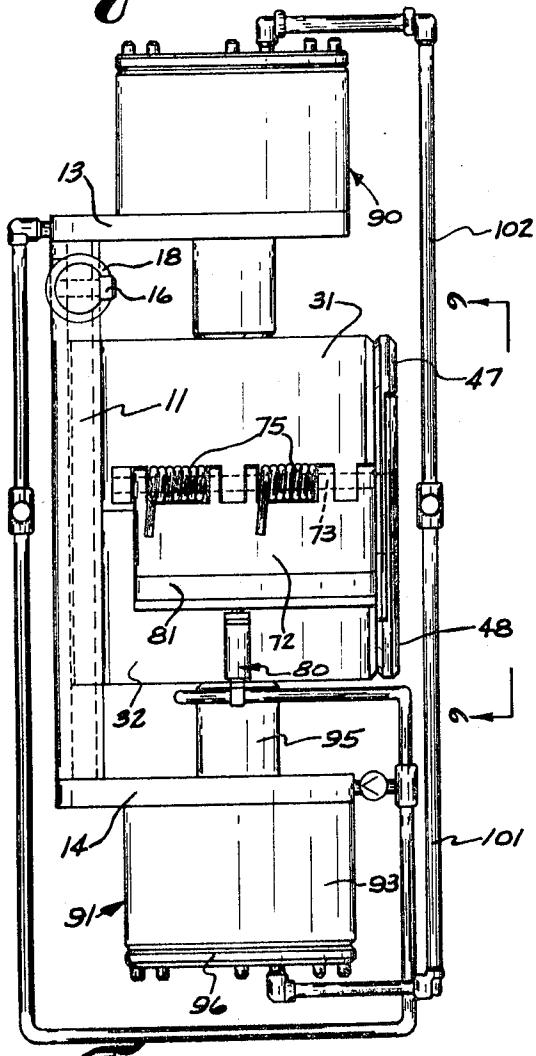

Fig. 4

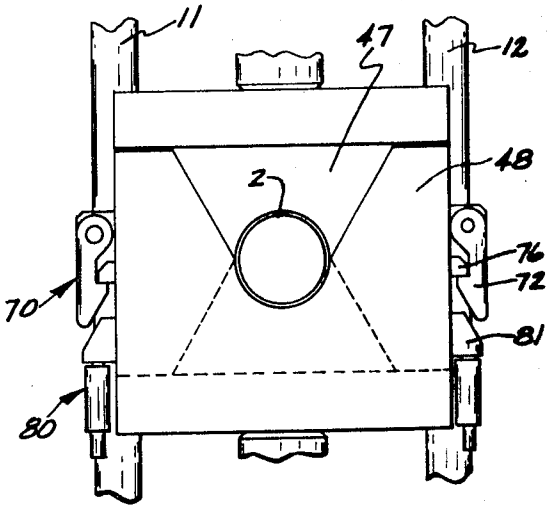

Fig. 6

APPARATUS FOR HANDLING CYLINDRICAL MEMBERS

BACKGROUND OF THE INVENTION

1. Field of the Invention

The present invention pertains to apparatus for handling cylindrical devices. More specifically, it pertains to apparatus suitable for gripping pipe to support it in an axial direction and to also apply a restraining torque thereto for adding or removing pipe from a pipe string such as is done in running or pulling pipe in a well.

2. Description of the Prior Art

In the conventional method of drilling and running or pulling pipe in and out of wells, a pipe string is usually supported at the floor of the well derrick by a set of normally hand operated rotary slips. These slips are normally set in the rotary table. Such slips, which are well known in the art, are provided with teeth which are wedged into tight gripping engagement with the pipe due to the cooperative action between the back of the slips and a correlative bowl or mandrel in which the slips are supported. The slips are actuated by the downward force applied thereto from the weight of the pipe string supported thereby.

In order to add sections of pipe to the string when it is being run into the well, or to remove sections of pipe when the string is being pulled from the well, auxiliary equipment such as wrenches, tongs, elevators, ropes, and chains are required. This technique, which is well known, is slow and extremely dangerous. In adding or removing a section of pipe from the string, one set of tongs is normally placed on the section of pipe to be removed and another set of tongs is placed around the adjacent pipe section to act as a "back-up".

Recently, new methods of drilling and running pipe into or pulling pipe from a well have been developed. For example, in my co-pending U.S. patent application Ser. No. 130,597, a new and improved method of drilling wells is disclosed in which the heavy rotary table, heavy drive connections, large drilling engines, and appurtenances of conventional well drilling equipment are eliminated. In the improved system, power means, such as an electric motor, for imparting rotary motion to the drill string is supported from the traveling block of a drilling derrick for vertical movement thereon. The power means is provided with an output shaft and a connector device by which it may be connected to the upper end of a pipe string to impart rotary motion thereto. Thus, the pipe string may be rotated by the connector for drilling, or joints of pipe may be connected and disconnected from the string as they are run into are removed from the well. Even with such an improved system, a means, such as rotary slips, must be provided to support the pipe string when it is not connected to the power means. In addition, means, such as a set of tongs must still be provided to back up the string when a joint is added to or removed therefrom. The present equipment suitable for these purposes is still relatively cumbersome and dangerous.

SUMMARY OF THE INVENTION

In the present invention, apparatus is disclosed for supporting the pipe string and applying a back-up torque for removal or addition of pipe sections, which eliminates many of the problems inherent in the presently available equipment. This apparatus includes a support frame which may be mounted on the floor of the well derrick. A split housing, having a central opening therethrough, is mounted on the support frame and is adapted for transverse movement to and from a first position, in which the housing halves are adjacent each other, and a second position, in which they are apart from each other. A gripping assembly is carried by the housing and disposed in its central opening for alternate gripping engagement and disengagement with the pipe string in the first and second positions, respectively. The gripping assembly includes a set of slips, having teeth thereon for engaging the pipe, and a set of wedges, by which the slips are wedged into gripping engagement with the pipe upon the application of force along the axis of the pipe when the housing halves are in the first position. In addition, the housing and wedges are provided with cooperable cam means by which the slips may be wedged into tighter gripping engagement with the pipe upon rotation of the pipe relative to the housing. Thus, the slips grip the pipe for both axial support and for applying a back-up torque to the pipe when a section of pipe is being added to or removed from the string. A piston and cylinder assembly is disclosed for moving the split housing halves to and from the first and second positions. A latch assembly is also disclosed for maintaining the housing in the first or engaging position.

Thus, with the present invention, conventional rotary slips and at least one set of tongs may be eliminated. When used with the aforementioned improved method of drilling described in my copending U.S. patent application Ser. No. 130,597, the rotary slips and both sets of tongs may be eliminated. In addition to eliminating the hazards inherent in the conventional rotary slips and tongs, the present invention affords a much faster operation and reduces the amount of man power required. Other objects, features and advantages of the invention will become apparent from the accompanying drawings and specification and claims which follow.

BRIEF DESCRIPTION OF THE DRAWINGS

In the description which follows, reference will be made to the accompanying drawings in which:

FIG. 1 is a top plan view, partially sectioned, of the pipe handling apparatus of the present invention, according to a preferred embodiment thereof;

FIG. 2 is a sectional detail of the latch assembly of the embodiment of the invention shown in FIG. 1, with the housing halves slightly separated;

FIG. 3 is a vertical end elevation of the exemplary embodiment shown in FIG. 1 taken along line 3—3 thereof;

FIG. 4 is a vertical side elevation of the exemplary embodiment of FIG. 1 taken along line 4—4 thereof;

FIG. 5 is a vertical cross-section of the embodiment of FIG. 1 taken along line 5—5 thereof; and

FIG. 6 is a partial plan view of the exemplary embodiment of FIGS. 1-5 taken along line 6—6 of FIG. 4.

DESCRIPTION OF A PREFERRED EMBODIMENT

Referring to the drawings, FIGS. 1-6, there is shown an exemplary embodiment of the invention which comprises a support frame 10, housing 30 and gripping assembly 50. The support frame 10 supports the entire apparatus, normally on a well derrick floor, and includes a pair of channels or rails 11, 12, connected at their ends to support plates 13 and 14. Each of the rails 11 and 12 may be made up of two sections, one short

and one long, connected by a tongue and groove joint, as best seen in FIG. 4, which is maintained by tie pins 16 and 17. Rings 18 and 19 may be provided for removing the pins. When the pins are removed, the end plate 13 may be displaced to allow disassembly of the entire apparatus.

The housing 30 is split into two halves 31 and 32 which are slidingly carried on the rails 11 and 12. For this purpose, a groove 33 and 34 may be cut along the sides of housing 30 for engagement by the upper web 21 and 22 of channel rails 11 and 12, as best seen in FIGS. 3 and 5. Thus, each of the housing halves 31 and 32 is transversely movable relative to the centrally located pipe 2, were it not for the latch assemblies 70, to be more fully described hereafter.

To effect the transverse movement of housing halves 31 and 32, to and from a first position adjacent each other, as shown in FIG. 1, and a second position apart from each other, there is provided a pair of piston and cylinder assemblies 90 and 91. The piston and cylinder assemblies are supported on the support plates 13 and 14 and comprise, with reference to assembly 91, a cylinder 93, piston 94, rod 95, and cylinder head 96. The rod 95 may be connected in any suitable manner, such as key stud 97 as shown in FIG. 1, to its respective housing half 32. Connected to the respective cylinders 93 by suitable conduits and ports 100–108 is a source of fluid power (not shown), by which the piston cylinder assembly 90 and 91 may be operated. It is readily understood that when a fluid pressure is applied to the rod side of piston 94, a force will be applied to housing half 32 causing it to be moved, if not restrained by latch assembly 70 and 72, to the aforementioned second position apart from the other housing half 31. When fluid pressure is applied to the head side of piston 94, the housing half 32 will be forced into the aforementioned first position adjacent the other half 31 as shown in FIG. 1. The same operation, of course, applies to the opposite piston and cylinder assembly 90 and housing half 31.

The latch assembly 70 comprises, with particular reference to FIGS. 2 and 4, a latch or dog 72 mounted on one of the housing halves 31 for pivoting about a hinge pin 73. One or more springs 75 may be provided biasing the latch 72 toward engagement with a latch shoulder 76 on the opposite housing half 32, as best shown in FIG. 1. Thus, the housing halves 31 and 32 are normally held in the adjacent or first position shown in FIG. 1. As long as they are so engaged, the piston and cylinder assemblies 90 and 91 are prevented from separating the halves 31 and 32 for movement to the second position. To release the latches 72, a pair of piston and cylinder operated cam devices 80 may be provided. These cam devices 80 are provided with a cam head 81, which when pressure is applied to the assembly 80, will engage a cam surface 78 on latch 72 causing it to be forced away from shoulder 76, as shown in FIG. 2. Appropriate conduits 84 and 85 connect the cam assemblies 80 to a suitable pressure source (not shown).

The gripping assembly 50 is disposed in a central opening 41 through housing 30 for engagement with the pipe 2, or any other cylindrical member to be handled thereby. The gripping assembly is supported on an annular shoulder 42, as best seen in FIG. 5, and includes a split positioning cage or spider 52, a set of slips 55 and a set of wedges 57. Each slip 55 may be attached to a corresponding wedge 57 by a sliding tongue and groove joint 58. The slips and wedges are retained within housing 30 by the sectioned plates 47 and 48. The front faces of the slips 55 are provided with teeth 71 for engaging the pipe 2. These teeth may be separate elements placed in longitudinal slots and maintained there by retainers 64. The front faces of the slips 55 are provided with teeth 61 for engaging the pipe 2. The back faces of the slips 55 comprise downwardly converging inclined surfaces 72 for sliding engagement with correlative downwardly converging inclined surfaces 63 on wedges 57. When the teeth 61 are caused to engage pipe 2 and a downward force is applied to the pipe 2, the slips 55 are wedgingly forced into gripping engagement with the pipe due to the inclined surfaces 62 and 63 of the slips and wedges. Thus, the pipe 2, when engaged by the slips in the first position illustrated in FIG. 1, is supported in the axial direction.

In addition to supporting the pipe 2 in an axial direction, the gripping mechanism 50 is designed to apply a torque to pipe 2 for backing up the pipe for removing or adding a section thereto, as would be done in well operations. To provide this function, the housing 30 and wedges 57 are provided with cooperating cam means which includes arcuate recesses 43 radially disposed in the walls of the central housing opening 41. There is one recess 43 for each set of wedges 57 and slips 55. Longitudinally disposed within each recess is a set of rollers 65 which is attached to the backs of wedges 57 by a vertical shaft 66 for rotation thereon. When no torque is being applied to the pipe 2, and consequently gripping mechanism 50, the gripping mechanism 50 normally assumes the symmetrical position of FIG. 1, in which rollers 65 lie at the deepest part of recesses 43. However, when a torque is applied to pipe 2 in either direction, the gripping mechanism 50 begins to rotate, along with pipe 2 and rollers 65 trace an arcuate path along the surfaces of arcuate recesses 43. As the rollers leave the deepest part of the recess, they cause the wedge 57, and consequently slips 55, to be cammed into tighter gripping engagement with pipe 2 until rotation is completely stopped, allowing a pipe section to be added to or removed from the pipe string 2. Thus, not only does the present invention provide a means for supporting the pipe string 2 in the axial direction, but it also provides a means for applying a back-up torque thereto.

In operation, the apparatus of the present invention would be maintained in the second position, in which the housing halves 31 and 32 lie apart from each other, until it is desired to either support the pipe 2 in an axial direction or to apply a torque thereto. Then, pressure would be applied to the piston and cylinder assemblies 90 and 91 forcing the housing halves 31 and 32 to the first or engaging position of FIG. 1 in which the gripping mechanism 50 engages the pipe string 2. The latch assembly 70 would assume the latched position shown in FIG. 1 causing this position to be maintained as long as required. As the housing halves 31 and 32 are brought together from the second position toward the first or engaging position, the pipe string 2 is forced into central alignment by the plates 47 and 48 which serve as guides for the pipe 2, as best understood in FIG. 5. When it is desired to release the pipe 2, the latch assemblies 70 are first disengaged by applying pressure to the camming devices 80. Then pressure is applied to the rod side of piston and cylinder assemblies 90 and 91 causing the housing halves 31 and 32

and their respective portions of the gripping assembly **50** to be moved to the deactivated or second position.

It can therefore be seen from the foregoing description that the present invention eliminates the need for cumbersome rotary slips and tongs conventionally used to support a pipe string and apply back-up torques thereto. Although only one exemplary embodiment has been described herein, many variations and applications of the invention will be apparent to those skilled in the art. Although the invention has been described with reference to handling pipe in a well, it can be used in any situation where axial support for or application of torque to a cylindrical member is desired. It is therefore intended that the scope of the invention be limited only by the claims which follow.

I claim:

1. Apparatus for axially supporting and rotatably restraining a cylindrical member comprising: support means; and gripping means having an opening therethrough for axially receiving said cylindrical member; said gripping means comprising separable portions carried by said support means for transverse movement relative to the axis of said cylindrical member, to and from first and second positions in which said gripping means respectively engages and disengages said cylindrical member; said gripping means including wedge means adapted to force said gripping means into tighter engagement with said cylindrical member upon rotation of said member to restrain said member against further rotation.

2. Apparatus as set forth in claim **1** in which said separable portions of said gripping means are connected to power means mounted on said support means for moving said separable portions to and from said first and second positions.

3. Apparatus as set forth in claim **2** in which said power means comprises piston and cylinder means connected to said separable portions.

4. Apparatus as set forth in claim **1** in which said gripping means comprises slip means, having teeth thereon for engaging said cylindrical member in said first position, said wedge means also being adapted for wedging said slip means into gripping engagement with said cylindrical member upon the application of force along the axis of said member.

5. Apparatus as set forth in claim **4** in which said gripping means comprises a housing in which said slip means and wedge means are carried, said wedge means and said housing being provided with cooperable cam means by which said tighter gripping engagement is attained.

6. Apparatus as set forth in claim **5** in which said cam means comprises roller means, attached to said wedge means along axes parallel to the axis of said cylindrical member, there being arcuate recesses radially disposed in the walls of said housing, said roller means being longitudinally disposed in said arcuate recesses whereby said slip means are cammed into said tighter gripping engagement with said cylindrical member upon arcuate movement of said roller means along said arcuate recesses until further rotation of said cylindrical member is prevented.

7. Apparatus as set forth in claim **6** in which said slip means and wedge means are carried by positioning means by which they are symmetrically disposed within said housing.

8. Apparatus as set forth in claim **6** in which said gripping means is split in two to form said separable portions, said portions being provided with cooperable latch means by which said portions may be held in said first position, said latch means being disengagable to permit said transverse movement to said second position.

9. Apparatus as set forth in claim **8** in which each of said portions comprises a split section of said housing, said latch means comprising at least one latch carried by one of said housing sections and biased toward engagement with shoulder means on an adjacent housing section when said portions are in said first position.

10. Apparatus as set forth in claim **9** in which said latch means comprises a cam device engagable with said latch for disengagement from said shoulder means.

11. Apparatus as set forth in claim **10** in which said cam device comprises a piston and cylinder assembly by which said cam device may be hydraulically operated.

12. Apparatus as set forth in claim **8** in which each of said separable portions is connected to power means mounted on said support means whereby the said transverse movement of said portions may be effected.

13. Apparatus as set forth in claim **12** in which said power means comprises piston and cylinder means whereby said power means may be hydraulically operated.

14. Apparatus as set forth in claim **8** in which said support means comprises rail means on which said separable portions slide during said transverse movement.

15. Apparatus as set forth in claim **1** in which said wedge means is adapted to wedge said gripping means into said tighter gripping engagement with said cylindrical member upon rotation of said cylindrical member in either direction.

16. Apparatus for axially supporting and rotatably restraining a cylindrical member comprising: support means, housing means mounted on said support means and having a central opening therethrough, said housing means being split into two housing halves transversely movable to and from a first position adjacent each other and a second position apart from each other; and gripping means carried by said housing halves and disposed in said central opening for alternate gripping engagement and disengagement with said cylindrical member in said first and second positions, respectively; said gripping means comprising toothed means and wedge means; said housing means and said wedge means being provided with cooperable cam means by which said toothed means is wedged into tighter gripping engagement with said cylindrical member upon rotation of said cylindrical member relative to said housing to restrain said member against further rotation.

17. Apparatus as set forth in claim **16** in which said cam means includes arcuate recesses, radially disposed in the wall of said central opening, and roller means, attached to said wedge means and longitudinally disposed in said arcuate recesses, whereby said toothed means is wedged into said tighter gripping engagement with said cylindrical member upon arcuate movement of said roller means along said arcuate recesses.

18. Apparatus as set forth in claim **17** in which said toothed means comprises a set of slips having teeth on the inner faces for gripping said cylindrical member and downwardly converging inclined surfaces on the

outer faces cooperable with correlative surfaces on said wedge means to support said cylindrical member when said teeth are engaging said member in said first position.

19. Apparatus as set forth in claim **18** in which said wedge means comprises a set of wedges held in symmetrical disposition in said central opening by positioning means, said slips and wedges being attached by slot and key means for sliding movement relative to each other along the plane of said inclined surfaces.

20. Apparatus as set forth in claim **16** in which said housing halves are provided with cooperable latch means by which said halves may be held in said first position, said latch means being disengageable to permit movement to said second position.

21. Apparatus as set forth in claim **20** in which said latch means comprises a latch on one of said halves spring biased toward engagement with a latch shoulder on the other of said halves.

22. Apparatus as set forth in claim **21** in which said latch means includes a power operated cam device engageable with said latch to overcome said spring bias for disengaging said latch from said latch shoulder.

23. Apparatus as set forth in claim **20** in which each of said housing halves is connected to a piston and cylinder assembly for moving said housing halves to and from said first and second positions.

24. Apparatus as set forth in claim **16** in which said housing halves are connected to piston and cylinder means for moving said halves to and from said first and second positions.

25. Apparatus as set forth in claim **16** in which said cooperable cam means is adapted to wedge said toothed means in said tighter gripping engagement with said cylindrical member upon rotation of said cylindrical member in either direction.

* * * * *