Dec. 20, 1949 J. R. C. QUILTER 2,492,063

DELAY-ACTION MECHANISM

Filed March 13, 1947

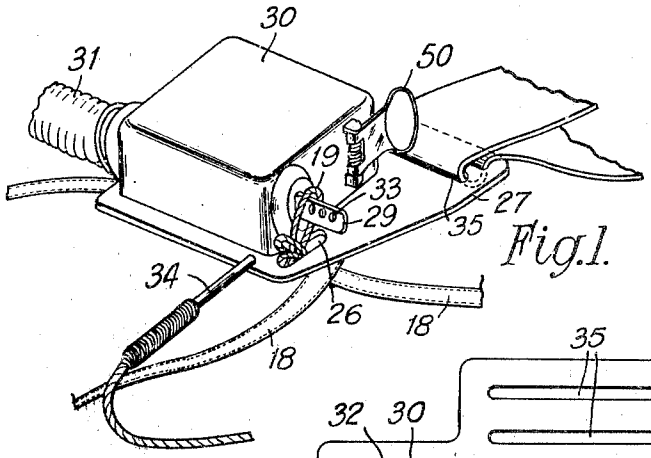

Fig.1.

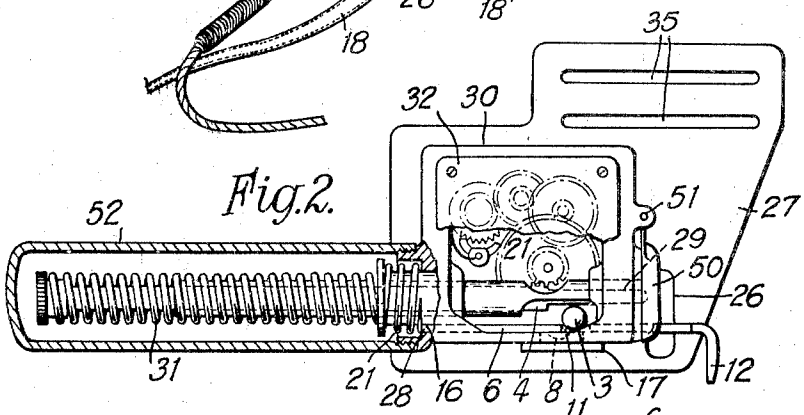

Fig.2.

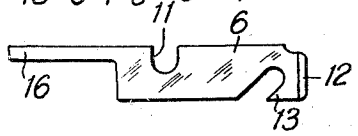

Fig.3.

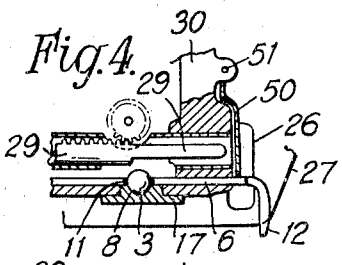

Fig.4.

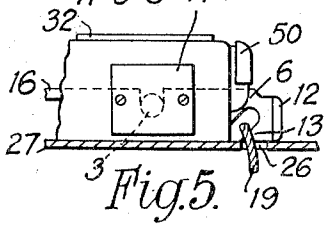

Fig.5.

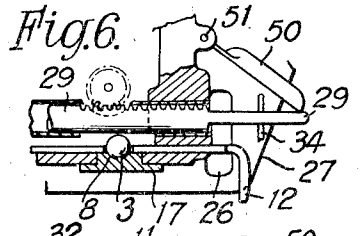

Fig.6.

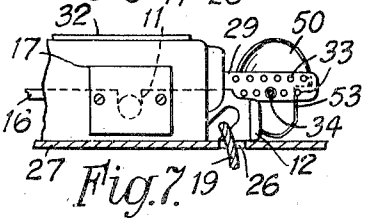

Fig.7.

Inventor

John Raymond Cuthbert Quilter

by: John W. Graham

HIS ATTORNEY.

Patented Dec. 20, 1949

2,492,063

UNITED STATES PATENT OFFICE

2,492,063

DELAY-ACTION MECHANISM

John Raymond Cuthbert Quilter,
Woking, England

Application March 13, 1947, Serial No. 734,303
In Great Britain March 4, 1946

Section 1, Public Law 690, August 8, 1946
Patent expires March 4, 1966

10 Claims. (Cl. 161—1)

1

This invention relates to delay-action mechanism applicable more especially to the release of parachutes in the dropping of loads from aircraft, the mechanism being then arranged to determine a suitable interval between the initiation of the releasing operation and the unlocking of the parachute pack, so that the opening of the parachute is retarded until the load has fallen clear of the aircraft.

The invention has for its main object the provision of improved means for engaging the delay-action mechanism with a member which is to be released for the unlocking of the parachute pack or other operation, such release being arranged to take place at the expiration of the period of delay.

A further object of the invention is to provide means for preventing the setting of the delay-action mechanism until the releasable member has been engaged.

A still further object is to provide means for locking the engagement of the releasable member by the action of setting the delay-action member.

A specific object of the invention is to provide the delay-action mechanism with a manually actuated latch for maintaining the releasable member in engaged position, and a stop which normally prevents the setting of the delay-action mechanism until the latch has been actuated to engage the releasable member, the actuation of the latch displacing the stop so that the setting action may be effected, and the setting movement in turn causing the stop to lock the latch in its actuated position with the releasable member engaged thereby.

Other objects and advantages of the invention will hereinafter appear from the following description of a preferred embodiment illustrated in the accompanying drawings, in which—

Fig. 1 is a perspective view of a delay-action device mounted upon the cover flaps of a parachute pack, as described and illustrated in my U. S. Patent No. 2,387,350, issued Oct. 23, 1945.

Fig. 2 is a part-sectional elevation of an improved delay-action mechanism embodying the present invention.

Fig. 3 is a side view of the manually actuated latch.

Fig. 4 is a sectional detail of Fig. 2, showing the latch actuated to engage a pack-flap retaining loop.

Fig. 5 is a side view corresponding to Fig. 4.

Fig. 6 is a sectional detail of Fig. 2, showing the timing plunger in the reset position.

Fig. 7 is a side view corresponding to Fig. 6.

2

In my prior Patent No. 2,387,350, I have described a parachute pack for loads to be dropped from aircraft, provided with a delay-action device such as illustrated in Fig. 1 of the accompanying drawings, which corresponds to Fig. 5 of the drawings to the said patent; in that device, a wire loop 19 retaining the pack cover flaps 18 in closed position is passed through a slot 26 in the base plate 27 of the casing 30 and engaged with the sliding plunger 29 of a clockwork mechanism, the movement of which is controlled by a rip cord wire 34 or equivalent restraining means.

In applying the present invention to that device, as illustrated in Figs. 2 to 7 of the accompanying drawings, the casing 30 of the sliding plunger 29 is arranged to house a stop member such as a steel ball 3 which normally engages with a shoulder 4 upon the plunger, preventing the latter from being forced out of the casing in order to reset the timing device by compression of the spring 31 coiled around its other end and enclosed in the removable thimble or cover 52; a latch member 6 slidable in the same casing under spring control and parallel to the plunger 29 is adapted to engage the pack-retaining loop 19 and by the same movement to displace the ball 3 from its locking position against the shoulder 4. This displacement moves the ball into a recess 8 at the side of the casing, in order to allow the plunger spring to be compressed, after removal of the thimble 52, so that after the retaining loop 19 has been engaged by the latch 6 the plunger can be forced out of the casing, as shown in Figs. 6 and 7, to the extent required for engaging the rip cord wire or restraining pin 34 in the selected perforation 33 of the plunger, according to the length of the timing or delay-action period desired.

As shown in Fig. 3, the latch member 6 is provided with a flat stem which is notched at 11 to admit the ball 3, a knurled head or cranked extremity 12 to facilitate its manipulation, and a hook 13 adjacent to the head, this hook being adapted to engage the pack-retaining loop 19; the latter is passed through the slot 26 in the base plate 27, as described in my aforesaid patent, but is then caught by the hook 13 when the latch member is actuated, as shown in Figs. 4 and 5, instead of being fitted over the end of the plunger 29 as in the arrangement described in that patent. At the other extremity of the latch member, the flat stem is continued by a rod 16 which slides in a guide hole 28 inside the casing, the tip of the rod engaging a spring 21 which tends to force the latch back after it has been manipulated.

When the rip cord wire or restraining pin 34

is withdrawn from the perforation 33 in the plunger, for example by the pull of the static line connected to the aircraft, the plunger 29 starts on the return movement under the driving force of its spring 31 controlled by the clockwork mechanism 21 enclosed in the casing; at the expiration of the predetermined delay-period, the shoulder 4 of the plunger will have moved sufficiently to clear the ball 3, so that the latter can move through the notch 11 in the latch stem and thus escape from the lateral recess 8 in the casing. The latch member will thus become free to shoot back to its original position, as shown in Fig. 2, under the action of the spring 20, thereby withdrawing its hook 13 from the pack-retaining loop 19 so that the latter can slip through the slot 26 and release the pack-retaining cover flaps.

The recess 8 in the side of the casing may be provided by forming in the wall an opening of sufficient size to admit the ball 3, and securing a small cover plate 17 over the opening, this plate having on its inner face a circular boss with a central depression or recess 8 of part-spherical shape to receive the portion of the ball projecting through the notch 11 when the ball is displaced by the plunger after the latch has been actuated (see Fig. 4).

The stop member may alternatively consist of any other suitable member such as a cylindrical roller, the shape of the recess 8 being modified accordingly. The dust-cap 50, which is pivotally mounted at 51 on the side of the casing under the control of a light spring, is partly cut away, as shown at 53 in Fig. 7, to provide clearance for the latch 6, while still being engaged by the extremity of the plunger when the latter is reset.

A replaceable index plate 32 may be attached to the top of the casing 30 in order to display the positions of the perforations 33 with the different timings of the delay-action mechanism obtained by engagement of the rip cord wire or restraining pin 34 in the respective perforations.

The base plate 27 may be provided with any convenient means for attachment to a support, such means consisting for example of two parallel slots 35, as shown in Fig. 2.

What I claim is:

1. A delay-action mechanism comprising a timing device, a displaceable stop adapted in one position to prevent the setting of said timing device, a slidable latch co-operating with said stop, and a member releasable at the expiration of a period determined by said timing device, said latch being adapted for sliding movement to engage said releasable member and by the same movement to displace said stop from said one position preventing the setting of said timing device.

2. A delay-action mechanism comprising a timing device, a displaceable stop adapted in one position to prevent the setting of said timing device, a slidable latch co-operating with said stop, and a member releasable at the expiration of a period determined by said timing device, said latch being adapted for sliding movement to engage said releasable member and by the same movement to displace said stop from said one position preventing the setting of said timing device, and said timing device being adapted in its setting movement to displace said stop to a position where it locks said latch in engagement with said releasable member.

3. A delay-action mechanism comprising a timing device, a displaceable stop adapted in one position to prevent the setting of said timing device, a slidable latch co-operating with said stop, and a member releasable at the expiration of a period determined by said timing device, said latch being adapted for sliding movement to engage said releasable member and by the same movement to displace said stop from said one position preventing the setting of said timing device, and said timing device being adapted in its setting movement to displace said stop to a position where it locks said latch in engagement with said releasable member, said stop resuming its initial position clear of said latch at the end of the delayed return of said timing device.

4. A delay-action mechanism comprising a support, a spring-driven timing plunger slidable in said support, means for retarding movement of said plunger by its spring drive, a shoulder upon said plunger, a notched latch slidable in said support parallel to said plunger, and a stop mounted in the notch of said latch and displaceable transversely in relation thereto, said stop in one extreme position of said latch engaging with said shoulder to prevent setting movement of said plunger, and the sliding movement of said latch from said extreme position displacing said stop to a position clear of said shoulder.

5. A delay-action mechanism comprising a support, a spring-driven timing plunger slidable in said support, means for retarding movement of said plunger by its spring drive, a shoulder upon said plunger, a notched latch slidable in said support parallel to said plunger, a member releasable at the expiration of a period determined by said plunger, and a stop mounted in the notch of said latch and displaceable transversely in relation thereto, said stop in one extreme position of said latch engaging with said shoulder to prevent setting movement of said plunger, and the sliding movement of said latch from said extreme position engaging said releasable member and at the same time displacing said stop to a position clear of said shoulder.

6. A delay-action mechanism comprising a support, a timing plunger slidable in said support, spring means for driving said plunger in one direction, means for retarding movement of said plunger by said spring driving means, a shoulder upon said plunger, means for setting said plunger against the action of said spring driving means, withdrawable means for holding said plunger in set position against the action of said spring driving means, a stop adapted to engage said shoulder to prevent setting movement thereof, a member releasable at the expiration of a period determined by the retarded movement of said plunger, and a latch slidable in said support parallel to said plunger, said latch including a hook for engaging said releasable member and being formed with a transverse guide for said stop, the sliding movement of said latch in a direction to cause its hook to engage said releasable member displacing said stop for movement transversely of said guide to a position clear of said shoulder whereby said plunger becomes free for setting against the action of said spring driving means, said holding means being engageable with said plunger in set position.

7. In a delay-action mechanism of the character set forth, comprising a timing plunger and means for engaging a member releasable at the expiration of a period determined by said plunger, the combination with said plunger of a stop normally preventing its setting to a timing period, and a latch slidable to engage said releasable member, the actuation of said latch to engage

said releasable member displacing said stop from its position preventing the setting of said plunger.

8. In a delay-action mechanism of the character set forth, comprising a timing plunger and means for engaging a member releasable at the expiration of a period determined by said plunger, the combination with said plunger of a stop normally preventing its setting to a timing period, and a latch slidable to engage said releasable member, the actuation of said latch to engage said releasable member displacing said stop from its position preventing the setting of said plunger, and the setting movement of said plunger causing said stop to lock said latch in its position of engagement with said releasable member.

9. In a delay-action mechanism of the character set forth, comprising a timing plunger and means for engaging a member releasable at the expiration of a period determined by said plunger, the combination with said plunger of a stop normally preventing its setting to a timing period, and a latch slidable to engage said releasable member, said latch including a guide for said stop, the actuation of said latch to engage said releasable member causing said guide to displace said stop from its position preventing the setting of said plunger.

10. In a delay-action mechanism of the character set forth, comprising a timing plunger and means for engaging a member releasable at the expiration of a period determined by said plunger, the combination with said plunger of a stop normally preventing its setting to a timing period, and a latch slidable to engage said releasable member, said latch including a guide for said stop, the actuation of said latch to engage said releasable member causing said guide to displace said stop from its position preventing the setting of said plunger, and the setting movement of said plunger causing said stop to take up a position within said guide which locks said latch in its position of engagement with said releasable member.

JOHN RAYMOND CUTHBERT QUILTER.

REFERENCES CITED

The following references are of record in the file of this patent:

UNITED STATES PATENTS

Number	Name	Date
1,470,610	Holt	Oct. 16. 1923