(12) INTERNATIONAL APPLICATION PUBLISHED UNDER THE PATENT COOPERATION TREATY (PCT)

(19) World Intellectual Property Organization
International Bureau

(43) International Publication Date
18 October 2007 (18.10.2007)

PCT

(10) International Publication Number
WO 2007/118087 A2

(51) International Patent Classification: Not classified

(21) International Application Number:
PCT/US2007/065876

(22) International Filing Date: 3 April 2007 (03.04.2007)

(25) Filing Language: English

(26) Publication Language: English

(30) Priority Data:
11/400,164 5 April 2006 (05.04.2006) US

(71) Applicant *(for all designated States except US)*: **3M INNOVATIVE PROPERTIES COMPANY** [US/US]; 3M Center, Post Office Box 33427, Saint Paul, Minnesota 55133-3427 (US).

(72) Inventor: **KRAZ, Vladimir**; 3M Center, Post Office Box 33427, Saint Paul, Minnesota 55133-3427 (US).

(74) Agents: **GOVER, Melanie G.** et al.; Office of Intellectual Property Counsel, Post Office Box 33427, Saint Paul, Minnesota 55133-3427 (US).

(81) Designated States *(unless otherwise indicated, for every kind of national protection available)*: AE, AG, AL, AM, AT, AU, AZ, BA, BB, BG, BH, BR, BW, BY, BZ, CA, CH, CN, CO, CR, CU, CZ, DE, DK, DM, DZ, EC, EE, EG, ES, FI, GB, GD, GE, GH, GM, GT, HN, HR, HU, ID, IL, IN, IS, JP, KE, KG, KM, KN, KP, KR, KZ, LA, LC, LK, LR, LS, LT, LU, LY, MA, MD, ME, MG, MK, MN, MW, MX, MY, MZ, NA, NG, NI, NO, NZ, OM, PG, PH, PL, PT, RO, RS, RU, SC, SD, SE, SG, SK, SL, SM, SV, SY, TJ, TM, TN, TR, TT, TZ, UA, UG, US, UZ, VC, VN, ZA, ZM, ZW.

(84) Designated States *(unless otherwise indicated, for every kind of regional protection available)*: ARIPO (BW, GH, GM, KE, LS, MW, MZ, NA, SD, SL, SZ, TZ, UG, ZM, ZW), Eurasian (AM, AZ, BY, KG, KZ, MD, RU, TJ, TM), European (AT, BE, BG, CH, CY, CZ, DE, DK, EE, ES, FI, FR, GB, GR, HU, IE, IS, IT, LT, LU, LV, MC, MT, NL, PL, PT, RO, SE, SI, SK, TR), OAPI (BF, BJ, CF, CG, CI, CM, GA, GN, GQ, GW, ML, MR, NE, SN, TD, TG).

Declarations under Rule 4.17:

— *as to applicant's entitlement to apply for and be granted a patent (Rule 4.17(ii))*

— *as to the applicant's entitlement to claim the priority of the earlier application (Rule 4.17(iii))*

Published:

— *without international search report and to be republished upon receipt of that report*

For two-letter codes and other abbreviations, refer to the "Guidance Notes on Codes and Abbreviations" appearing at the beginning of each regular issue of the PCT Gazette.

(54) Title: DEVICE AND METHOD OF MONITORING GROUND CONNECTION OF MOVING EQUIPMENT WITH INSULATIVE BEARING ARRANGEMENT

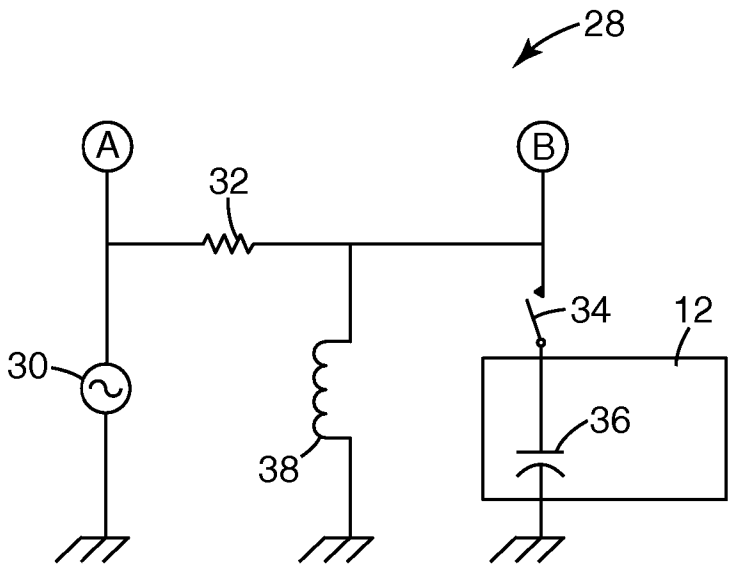

(57) Abstract: A device and method of monitoring ground connection of moving equipment with insulative bearing arrangement is provided that does not use a spring contact that wears out and fails. The device provides a reliable method to monitor the ground connection of the moving equipment with an insulative bearing.

WO 2007/118087 A2

DEVICE AND METHOD OF MONITORING GROUND CONNECTION OF MOVING EQUIPMENT WITH INSULATIVE BEARING ARRANGEMENT

FIELD OF THE INVENTION

The invention relates generally to a device and method for monitoring a ground connection for a piece of equipment.

BACKGROUND OF THE INVENTION

Moving equipment that uses insulative bearing arrangement, such as air bearing spindles, cannot be adequately grounded during operation since the bearing arrangement used are by definition insulative. In static-sensitive (electrostatic discharge - ESD) applications, such as disk drive and semiconductor equipment, it is important to assure a good ground connection between a rotor of the spindle and ground. In a typical system, a spring-loaded connection between rotor and ground is used. Figure la depicts an example of a typical arrangement with a spindle 10 with its rotor 12 separated from the stator by an insulative bearing 14, such as an air bearing in this example. In this particular application, the air spindle drives a disk drive platter 16 during a test and a magnetic head 18 used for the test can be easily damaged if the voltage on the platter 16 is high which can be caused when the platter 16 (and the rotor 12) is not being grounded properly.

The grounding of the rotor is typically accomplished by a spring-loaded contact 20 physically and electrically connected to the stator, or frame, via arrangement 22. This contact is electrically connected typically to a special contact 20 at the center of the rotor wherein the arrangement 22 extends and connects to the spindle 10 by a screw 24. The special contact is usually called "button" and this document uses this definition for clarity. The special connection shown in Figure la is not reliable since the button 20 wears off and also the spring of this contact can relax due to fatigue and therefore interrupt the contact as shown in Figure lb. When the contact is interrupted, the ground connection is lost and dangerous exposure of sensitive components to voltages and currents can occur. It is desirable to provide a device and method for being able to monitor the connection between the rotor and ground reliably and does not rely on the spring contact.

A conventional method of monitoring a ground connection by continuity (such as is shown in a Ground Master product commercially available from 3M Company, formerly Credence Technologies, Inc., with further details of this product found at

http://www.credencetech.com/products/product.php?productId=CTC065,%20CTC065RT) cannot be employed in this case since only one electrical contact of monitored part is available.

Thus, it is desirable to provide a device and method of monitoring ground connection of moving equipment with insulative bearing arrangement and it is to this end that the present invention is directed.

SUMMARY OF THE INVENTION

A device and method of monitoring ground connection to moving equipment with insulative bearing arrangement is provided that utilizes measurements of parasitic capacitance between a moving member and a stationary member to determine whether the moving member is properly grounded via a contact. The device provides a reliable method to monitor the ground connection of the moving equipment with an insulative bearing.

Thus, in accordance with the invention, an object is provided that comprises a moving member, a stationary member separated from the moving member by an insulative bearing, and a circuit that measures a parasitic capacitance between the moving member and the stationary member by means of measuring capacitance between grounding contact and the stationary member in order to determine a connection to the moving member.

In accordance with another aspect of the invention, a device of monitoring the grounding of an object having a moving member and a stationary member separated by an insulative bearing is provided. The device has a circuit that measures a parasitic capacitance between a moving member and a stationary member, and a circuit that indicates a connection to the moving member.

In accordance with yet another aspect of the invention, a method for monitoring the grounding of an object having a moving member and a stationary member separated by an insulative bearing is provided. In the method, the parasitic capacitance between the moving member and the stationary member of the device is measured. Then, a connection to the moving member based on the measured parasitic capacitance is determined.

In all of the embodiments of the invention, the grounding of the moving member is provided by an adequate galvanic ground path between a contact connected to a moving member with properties allowing for measurements of capacitance.

BRIEF DESCRIPTION OF THE DRAWINGS

Figures la and lb illustrate a typical device for monitoring the grounding of a piece of moving equipment with an insulative bearing;

Figure 2 illustrates an example of a preferred embodiment of a circuit that implements a method for monitoring the ground connection of a piece of equipment with an insulative bearing;

Figures 3a and 3b illustrate the waveforms generated by the device shown in Figure 2;

Figure 4 illustrates an example of an embodiment of a device for monitoring the ground connection of a piece of equipment with an insulative bearing;

Figure 5 illustrates an example of another embodiment of a device for monitoring the ground connection of a piece of equipment with an insulative bearing;

Figure 6 illustrates an example of yet another embodiment of a device for monitoring the ground connection of a piece of equipment with an insulative bearing;

Figure 7 illustrates an example of yet another embodiment of a device for monitoring the ground connection of a piece of equipment with an insulative bearing; and

Figures 8A and 8B illustrates an example of yet another embodiment of a device and method for monitoring the ground connection of a piece of equipment with an insulative bearing.

DETAILED DESCRIPTION OF A PREFERRED EMBODIMENT

The invention is particularly applicable to a device and method for monitoring the ground connection in a piece of equipment with an air bearing and it is in this context that the invention will be described. It will be appreciated, however, that the device and method in accordance with the invention has greater utility since the device may be used with any object or moving piece of equipment with an insulative bearing and it may be implemented using different circuits and components than those shown below in the diagrams and those other implementations of the device and method are within the scope of the invention.

Figure 2 illustrates an example of a preferred embodiment of a circuit 28 that implements a method for monitoring the ground connection of a piece of equipment with an insulative bearing. Broadly, the method, circuit and device of the invention rely on

parasitic capacitance between the rotor and the stator of the motor to monitor a connection and in particular a ground connection. Therefore, any circuit or device that implements a method in which the ground connection for a moving object with an insulative bearing is monitoring via parasitic capacitance is within the scope of the invention.

The circuit 28 may include a known alternating current (AC) signal oscillator 30 that provides an AC signal via a resistor 32 to a contact 34 (which performs the same function as the button 20 of Figure la and may be implemented as the button 20). A parasitic capacitance between the rotor 12 and the stator is represented in Figure 2 as a capacitor 36. An inductor 38 provides galvanic connection to ground while having high impedance at the frequencies that are being used for the monitoring of the ground connection. Using this method, the grounding is provided via the monitor circuit and not via the connection of the button 20 (Figure la) to ground directly. In order to use this method, the contact 34 needs to be electrically separated from the stator/frame by using conventional methods, such as nylon screws and washers, etc.

Figures 3a and 3b illustrate the waveforms generated by the device shown in Figure 2. In particular, when connection between the contact 34 and the rotor 12 is broken, the signals at points A and B in the circuit shown in Figure 2 are essentially identical as seen in Figure 3a. However, if the contact between rotor 12 and the contact 34 is good, a capacitive load is introduced and as a result, the waveform at point B changes as shown in Figure 3b. In particular, the waveform at point B is now both lower in amplitude and lags in phase (by a predetermined time lag C) as compared to the original signal at point A. In accordance with the invention, either of these phenomena (the difference in amplitude of the signals or the phase shift of the signals) can be exploited in order to monitor the connection between the contact and the rotor. An example of a device for monitoring the ground based on the phase shift/difference is described below with reference to Figure 4 and an example of device for monitoring the ground based on the amplitude difference is described below with reference to Figure 5.

Figure 4 illustrates an example of an embodiment of a device 100 for monitoring the ground connection of a piece of equipment with an insulative bearing. The circuit 28 may output signals at points A and B (as described above with respect to Figure 2) and the signals pass through a set of optional amplifiers 40 and 42 that amplify the signals. The outputs from points A and B (or the outputs from the optional amplifiers) are fed into a set

of inputs of a typical phase comparator 44 that may be implemented as a commonly known circuit built using an XOR gate (described at http://www.uoguelph.ca/~antoon/gadgets/pll/pll.html or at http://ocw.mit.edu/NR/rdonlyres/Electrical-Engineering-and-Computer-Science/6-331Advanced-Circuit-TechniquesSpring2002/80219724-F666-489D-8564-8B8E5DC94BCC/0/lab3.pdf.) If the phases of the signals are the same or within an acceptable limit, the phase comparator 44 indicates failure of ground connection with no signal. If the phase difference between the signals exceeds a preset limit, this indicates a good connection between the contact 34 to ground which is output at a stepped voltage signal as shown. Typically, the difference between capacitance from the connector to ground in pass and in fail state is substantial. The typical parasitic capacitance between the moving member and the stationary member of one type of air-bearing spindle is in the range of 1000 to 4000 pF, depending on construction, while the capacitance to ground of the connector that is disengaged from the moving member is a few picofarads.

Therefore, it is reasonable to anticipate a substantial phase difference between these two instances. It is prudent, however, to assess the parasitic capacitance and the resulting phase difference for each type of equipment since each type of equipment may have a different parasitic capacitance and therefore a different phase difference. Then, it is possible to make a device in accordance with the invention that will be able to monitor the parasitic capacitance (and phase difference) for most, if not all, of the difference pieces of equipment with insulative bearings despite the parasitic capacitance differences. The device 100 may optionally include an LED 46 and/or a buzzer 48 that indicate the pass/fail condition of the ground connection. An output signal 50 from the device 100 can be used for various purposes such as an external alarm, emergency stop of the tool, etc.

Figure 5 illustrates an example of another embodiment of a device 110 for monitoring the ground connection of a piece of equipment with an insulative bearing. This device relies on the amplitude change of the signals to monitor the ground connection. In this device, the signal from the contact 34 (point B in the circuit 28) passes through an optional amplifier 60 (to amplify the signal as needed) and then is rectified by a circuit that may, for example, include a diode 62, a capacitor 64 and a resistor 66. The output of the rectifier is connected to a first input of a comparator 68 (implemented as an operational amplifier) and a second input of the comparator is connected to a reference

voltage 70. If the connection between the contact 34 and the rotor is good, the signal at the contact is low and the comparator 68 will indicate that it is below the set reference level (shown as a high output signal). If connection between the contact and the rotor is interrupted, the signal at the contact is high and the comparator indicates the failure status by a low output signal. As with Figure 4, this device 110 may have the same outputs, LEDs, buzzers, etc. as was shown in Figure 4.

Figure 6 illustrates an example of yet another embodiment of the a device 120 for monitoring the ground connection of a piece of equipment with an insulative bearing. In this device 120, the output from the circuit components 60-66 (shown in Figure 5) is provided to an input of a processing unit 80, such as a microprocessor, with a built-in A/D converter 82. This device 120 performs the same function as the device shown in Figure 5 and can also provide advance warning of worsening of contact between button and rotor as indicated by a change in the signal that can be more precisely measured and monitored by the processing unit 80.

Figure 7 shows yet another method of monitoring the ground connection of the moving member. In this method, the ground connection is measured based on altering the oscillator frequency by changing the value of a capacitor that determines the frequency of the oscillator. While many types of such oscillators are generally known and may be used for the above method, a Collpitz LC oscillator 100 is shown for illustration. This oscillator 100 is comprised of a transistor 102, resistor 104, capacitors 106, 108, 110 and 112 and inductors 114 and 116. Operation of such oscillator is widely known and is not a subject of this invention. The inductors 114 and 116 provide ground path for rotor 36. A capacitance 36 formed by the rotor and the stator also participates in defining the oscillation frequency. Depending on a contact 34, the capacitor 36 is either in the circuit or not, thus changing the oscillator frequency. Therefore, by knowing the oscillator frequency, it is possible to know whether the rotor is adequately grounded or not.

In Figure 7, the output of the oscillator 100 is connected to an optional buffer 111 that reduces the influence of load on frequency of the oscillation. The output of the buffer 111 is connected to a bandpass filter comprised of capacitor 120 and LC tank using inductor 122 and capacitor 124. The output of the filter is then rectified by a diode 126 and filtered with capacitor 130 and resistor 132. This bandpass filter is tuned to the frequency of oscillation when the contact of the rotor with ground is satisfactory. Thus,

when the rotor is properly grounded, the frequency of oscillator is the same or sufficiently close to the frequency of the bandpass filter and the output of the detector is high. If the ground of the rotor is disconnected, the frequency of oscillation changes and the output of the detector is low. This status is detected by a comparator 134 which has a reference voltage 136 connected to its second input to define the threshold voltage of good ground status. It should be noted that other types of oscillators can be equally used, such as the one built on common 555 timer, as well as other solutions.

Figure 8A depicts a solution similar to those of Figure 7, but with different way of determining frequency deviation. In Figure 8A, the device has the same oscillator 100 with the same elements as those shown in Figure 7 although the particular elements of the oscillator are not labeled in Figure 8A. For this device, instead of a bandpass filter and detector, a frequency counter 140 is used. As shown in Figure 8B, a method 142 for measuring the ground connection is shown using the device of Figure 8A. In the method, the frequency of the oscillator is compared to a reference voltage in step 144. If the frequency of oscillation is within acceptable limits (tested in step 146), then the ground condition is determined to be satisfactory and the method 142 loops back to step 144. If the frequency is different, an alarm is issued in step 148. The device of Figure 8A may be easily implemented using a microcontroller.

While the foregoing has been with reference to a particular embodiment of the invention, it will be appreciated by those skilled in the art that changes in this embodiment may be made without departing from the principles and spirit of the invention, the scope of which is defined by the appended claims.

CLAIMS:

1. An object, comprising:
   a moving member;
   a stationary member separated from the moving member by an insulative bearing; and
   a circuit that measures a parasitic capacitance between the moving member and the
   stationary member in order to determine a connection to the moving member.

2. The object of claim 1, wherein the circuit further comprises one or both of an electrical contact to the moving member and an electrically conductive path from the electric contact to ground.

3. The object of claim 1, wherein the circuit further comprises an output signal whose amplitude changes depending on the grounding connection of the moving member.

4. The object of claim 3, wherein the circuit further comprises a rectifier circuit that rectifies the output signal to generate a rectified output signal and a device that compares the amplitude of the rectified output signal and a reference signal to generate a comparator output signal that indicates the grounding connection of the moving member.

5. The object of claim 4, wherein the device that compares the rectified output signal and the reference signal further comprises one or both of a comparator and a processing unit.

6. The object of claim 4, wherein the rectifier circuit further comprises a diode coupled to the output signal, a capacitor and a resistor in parallel, coupled between an output of the diode and ground.

7. The object of claim 1, wherein the circuit further comprises one or both of (a) an output circuit that indicates the grounding connection of the moving member and (b) an oscillator that generates a signal having a frequency wherein the frequency of the oscillator depends on the connection to the moving member.

8. The object of claim 1, wherein the circuit further comprises a pair of output signals whose phase differences depend on the grounding connection of the moving member.

9. The object of claim 8, wherein the circuit further comprises a phase comparator that compares the phase of the pair of output signals and outputs a phase output signal that indicates the grounding connection of the moving member.

10. The object of claim 1, wherein the circuit further comprises an oscillator that generates a signal having a frequency wherein the frequency of the oscillator depends on the connection of the moving member.

11. The object of claim 10, wherein the circuit further comprises one or both of (a) a bandpass filter coupled to the oscillator wherein the bandpass filter is tuned to a frequency of the oscillator when a good connection to the moving member exists and a comparator an output signal from the bandpass filter to a reference signal to generates a signal indicating a status of the connection to the moving member and (b) a frequency counter coupled to the oscillator that determines the frequency of the oscillator and generates a signal indicating a status of the connection to the moving member .

12. A device of monitoring the grounding of an object having a moving member and a stationary member separated by an insulative bearing, the device comprising:

a circuit that measures a parasitic capacitance between a moving member and a stationary member; and

a circuit that indicates a connection to the moving member.

13. The device of claim 12, wherein the circuit further comprises one or both of an electric contact to the moving member and an electrically conductive path from the electric contact to ground.

14. The device of claim 12, wherein the circuit that determines the grounding connection further comprises an output signal whose amplitude changes depending on the grounding connection of the moving member.

15. The device of claim 14, wherein the circuit that determines the grounding connection further comprises a rectifier circuit that rectifies the output signal to

generate a rectified output signal and a device that compares the rectified output signal and a reference signal to generate a comparator output signal that indicates the grounding connection of the moving member.

16. The device of claim 15, wherein the device that compares the rectified output signal and the reference signal further comprises one or both of a comparator and a processing unit.

17. The device of claim 15, wherein the rectifier circuit further comprises a diode coupled to the output signal, a capacitor and a resistor in parallel, coupled between an output of the diode and ground.

18. The device of claim 12, wherein the circuit that determines the grounding connection further comprises a pair of output signals whose phase differences depend on the grounding connection of the moving member.

19. The device of claim 18, wherein the circuit that determines the grounding connection further comprises a phase comparator that compares the phase of the pair of output signals and outputs a phase output signal that indicates the grounding connection of the moving member.

20. The device of claim 12, wherein the circuit further comprises an oscillator that generates a signal having a frequency wherein the frequency of the oscillator depends on the connection to the moving member.

21. The device of claim 20, wherein the circuit further comprises one or both of (a) a bandpass filter coupled to the oscillator wherein the bandpass filter is tuned to a frequency of the oscillator when a good connection to the moving member exists and a comparator an output signal from the bandpass filter to a reference signal to generates a signal indicating a status of the connection to the moving member and (b) a frequency counter coupled to the oscillator that determines the frequency of the oscillator and generates a signal indicating a status of the connection to the moving member.

22. A method for monitoring the grounding of an object having a moving member and a stationary member separated by an insulative bearing, the method comprising:

measuring a parasitic capacitance between the moving member and the stationary

determining a grounding connection to the moving member based on the measured parasitic capacitance.

23. The method of claim 22, wherein measuring the parasitic capacitance further comprises measuring the capacitance between an electrical contact connected to the moving member.

24. The method of claim 23, wherein measuring the capacitance between an electric contact connected to the moving member further comprises measuring the capacitance between the electrical contact with a path to ground and the moving member.

25. The method of claim 22 further comprising outputting an output signal whose amplitude changes depending on the grounding connection of the moving member.

26. The method of claim 25, wherein determining the grounding connection further comprises rectifying, using a rectifier circuit, the output signal to generate a rectified output signal and comparing the amplitudes of the rectified output signal and a reference signal to generate a comparator output signal that indicates the grounding connection of the moving member.

27. The method of claim 22 further comprising outputting a pair of output signals whose phase differences depend on the grounding connection of the moving member.

28. The method of claim 27, wherein determining the grounding connection further comprises comparing, using a phase comparator, the phase of the pair of output signals and outputs a phase output signal that indicates the grounding connection of the moving member.

29. The method of claim 22, wherein determining the ground connection further comprises generating, using an oscillator, a signal having a frequency wherein the frequency of the oscillator depends on the connection to the moving member.

30. The method of claim 29, wherein determining the ground connection further comprises one or both of (a) tuning a bandpass filter to a frequency of the oscillator

when a good connection to the moving member exists and comparing an output signal from the bandpass filter to a reference signal to generates a signal indicating a status of the connection to the moving member and (b) using a frequency counter coupled to the oscillator to determine the frequency of the oscillator and generates a signal indicating a status of the connection to the moving member.

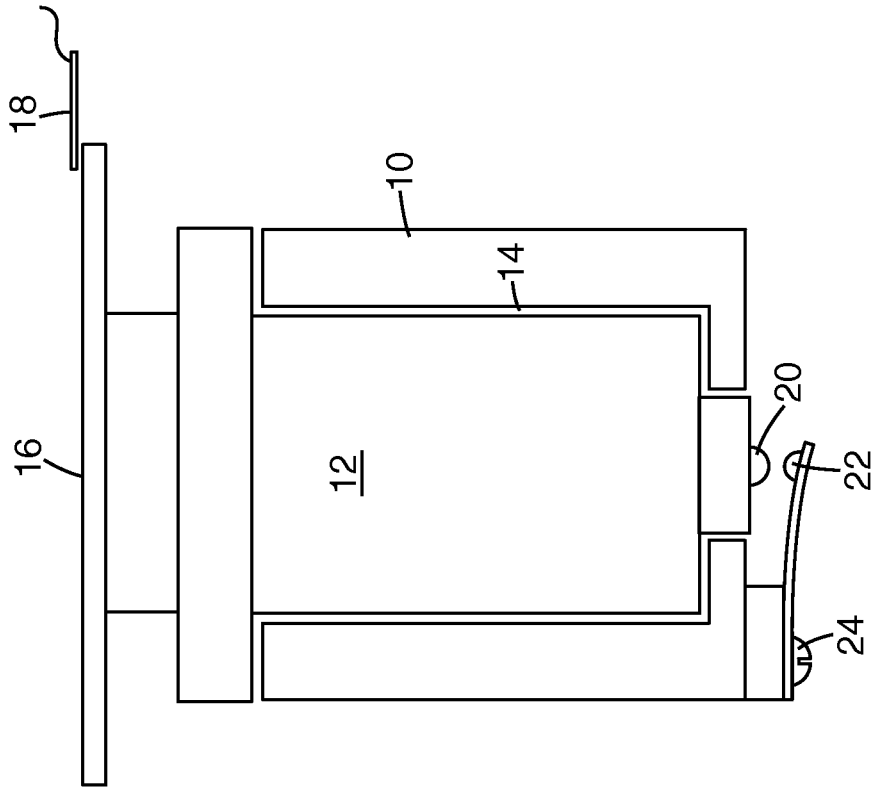

Fig. 1b

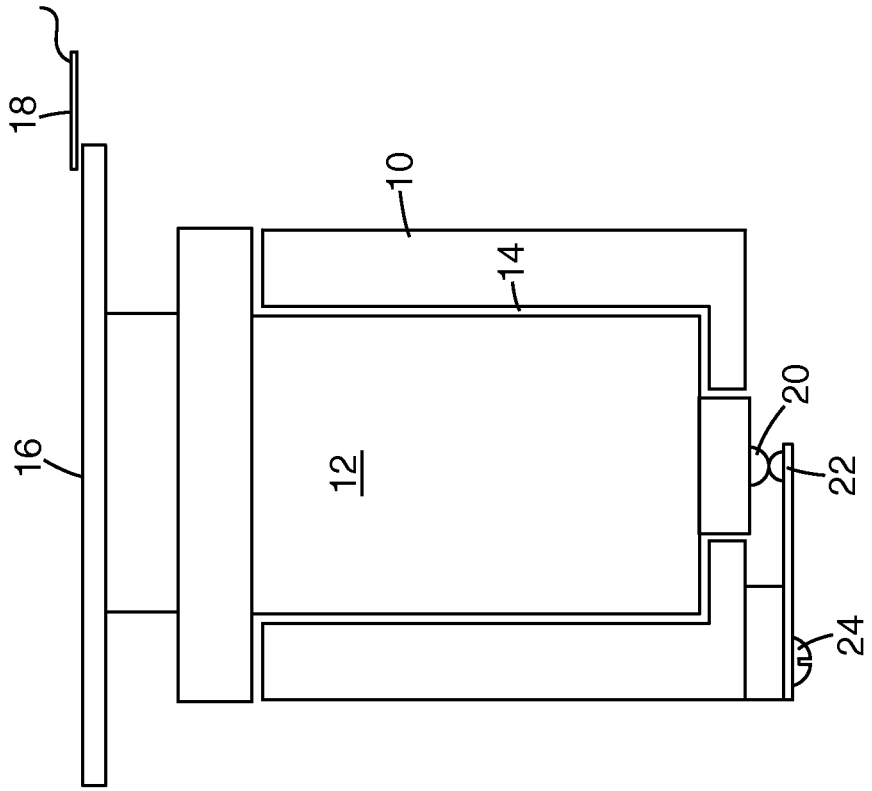

Fig. 1a

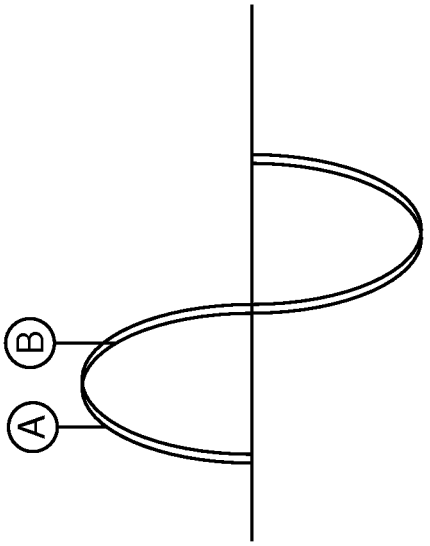

Fig. 3a

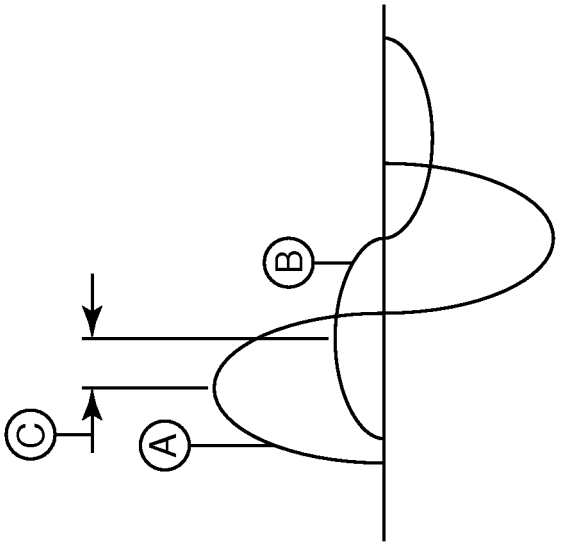

Fig. 3b

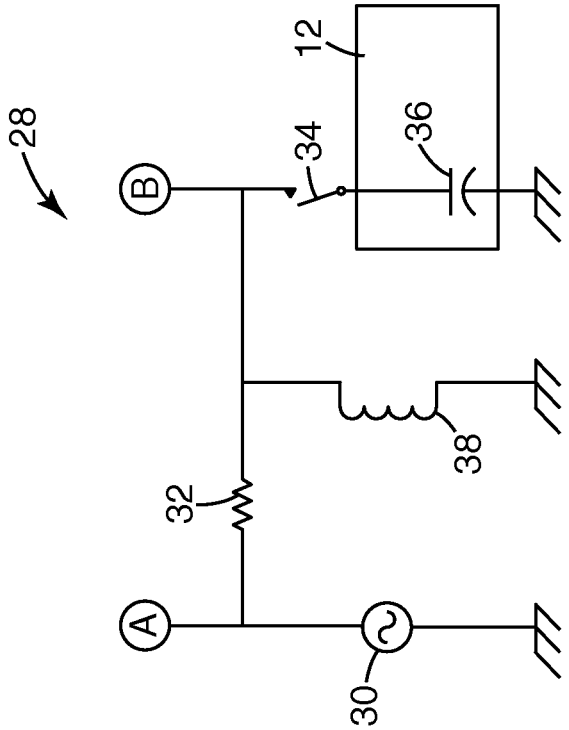

Fig. 2

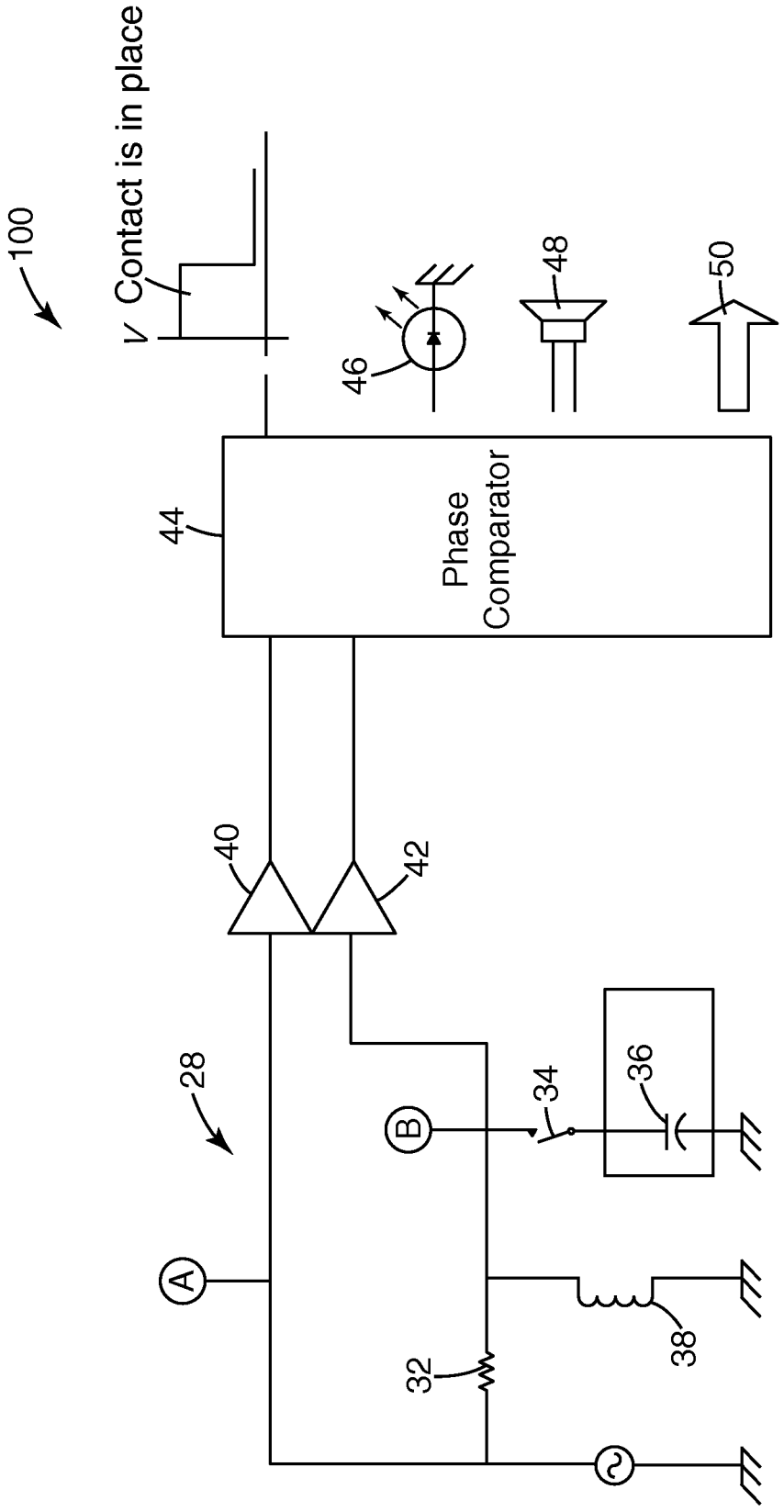
100
Contact is in place
46
48
50
44
Phase
Comparator
40
42
28
A
B
34
36
32
38

Fig. 4

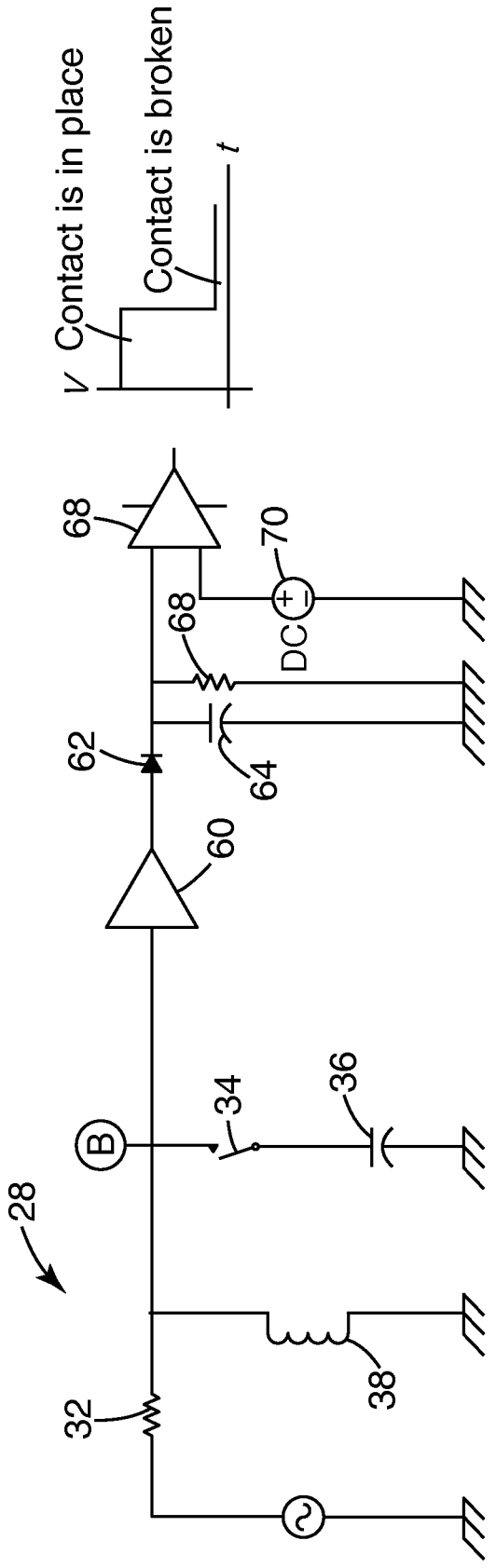
110
V
Contact is in place
Contact is broken
t
68
70
DC
68
62
64
60
28
B
34
36
32
38

Fig. 5

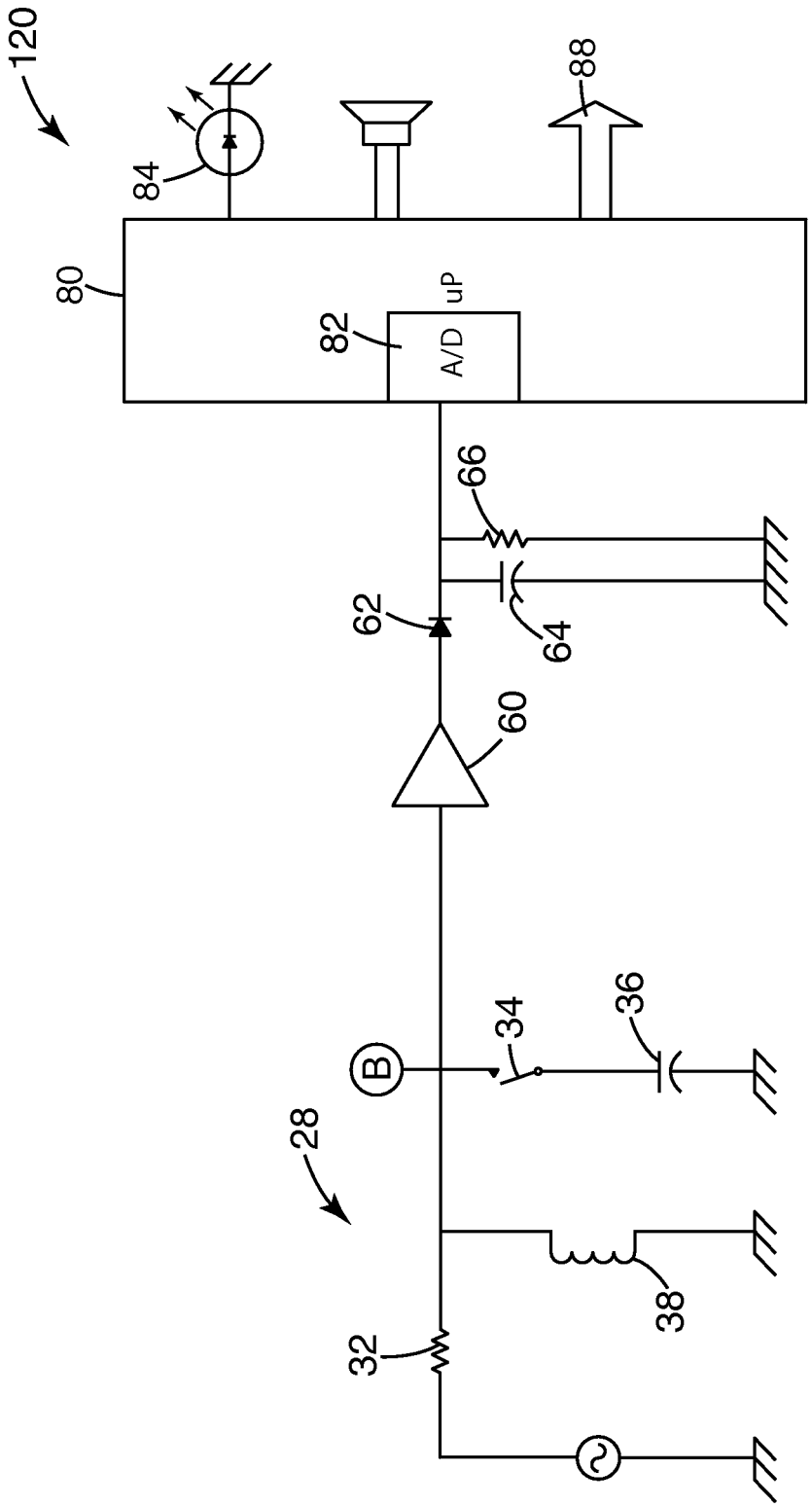

Fig. 6

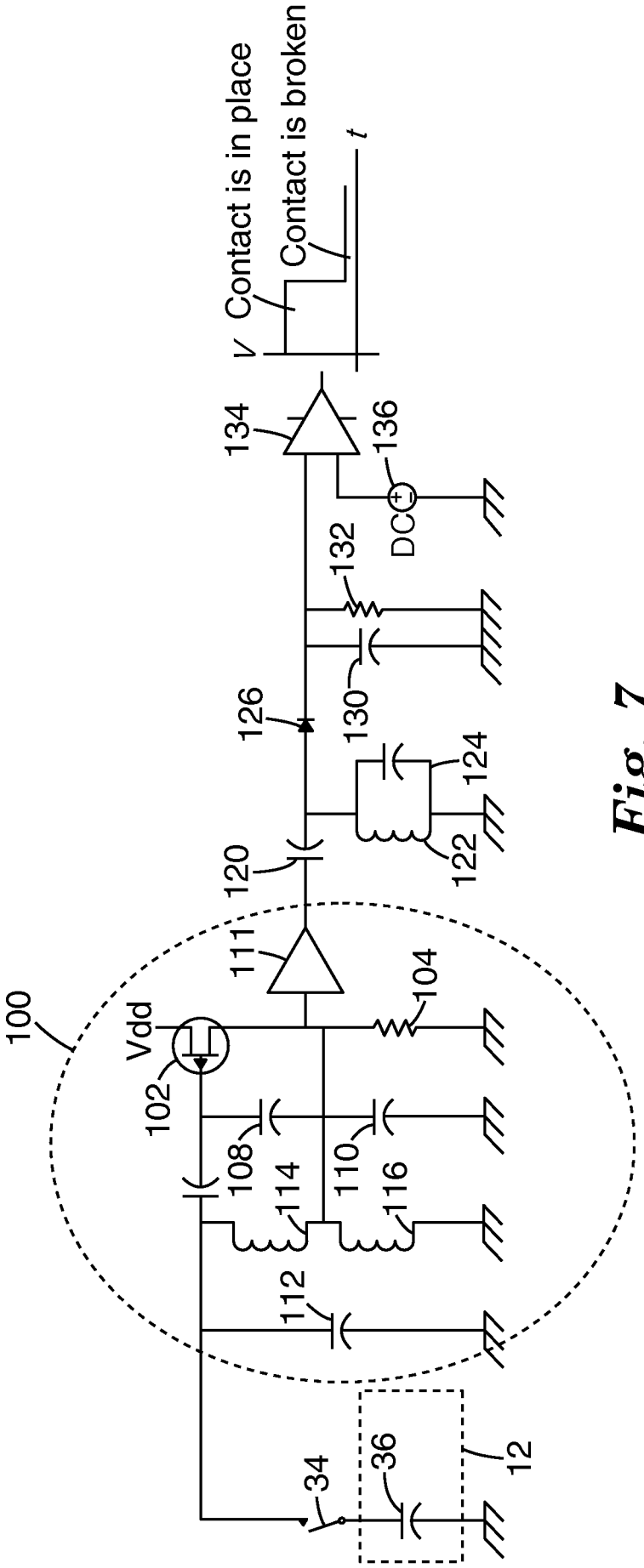
V
Contact is in place
Contact is broken
t
134
136
DC
132
130
126
124
122
120
111
104
100
Vdd
102
108
114
110
116
112
34
36
12

Fig. 7

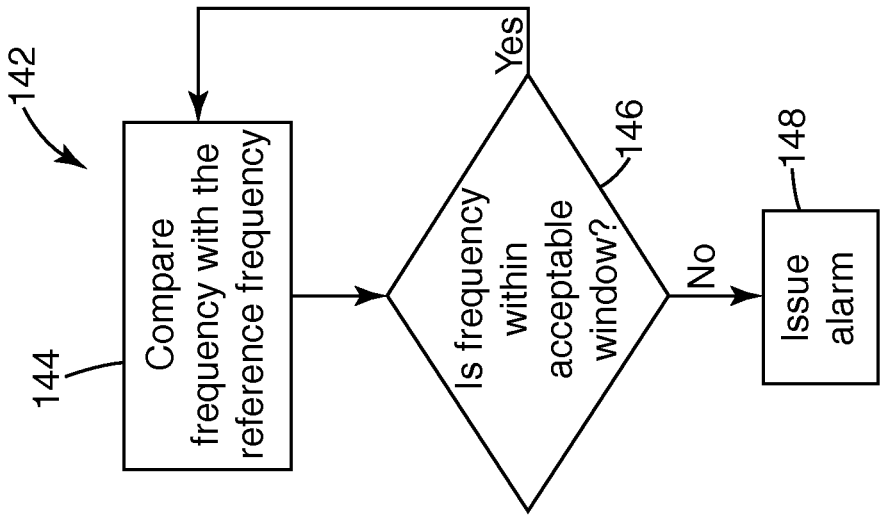
142
Compare frequency with the reference frequency
144
Is frequency within acceptable window?
146
Yes
No
Issue alarm
148

Fig. 8b

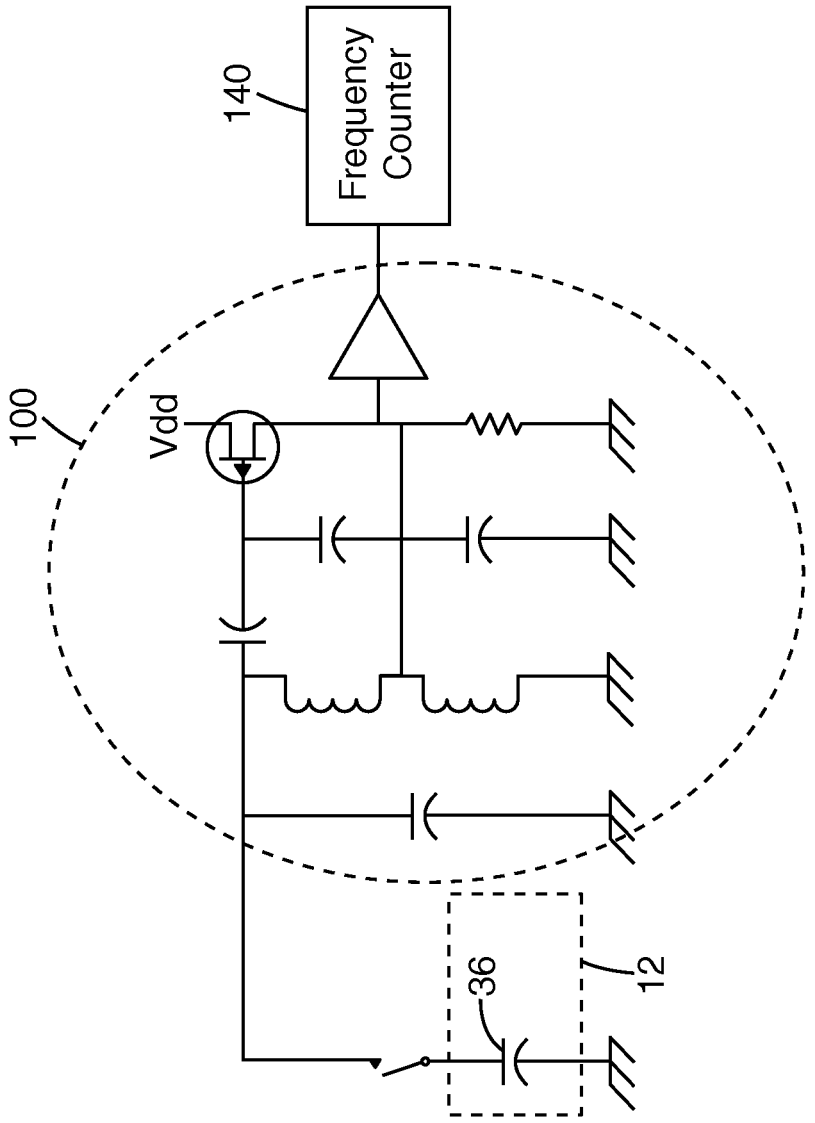
140
Frequency Counter
100
Vdd
36
12

Fig. 8a