US 20020042918A1

(19) United States

(12) Patent Application Publication (10) Pub. No.: US 2002/0042918 A1

Townsend et al. (43) Pub. Date: Apr. 11, 2002

# (54) RECEIVERS FOR TELEVISION SIGNALS

(75) Inventors: **Christopher Townsend**, Isleworth (GB); **David Holliday**, Isleworth (GB); **Robin Crossley**, Isleworth (GB); **Alun David Webber**, Isleworth (GB)

Correspondence Address:
**ROTHWELL, FIGG, ERNST & MANBECK, P.C.**
**555 13TH STREET, N.W.**
**SUITE 701, EAST TOWER**
**WASHINGTON, DC 20004 (US)**

(73) Assignee: **British Sky Broadcasting Ltd.**, Isleworth (GB)

(21) Appl. No.: **10/013,719**

(22) Filed: **Dec. 13, 2001**

**Related U.S. Application Data**

(62) Division of application No. 08/952,603, filed on Apr. 23, 1999, which is a 371 of international application No. PCT/GB96/01228, filed on May 22, 1996.

(30) **Foreign Application Priority Data**

Sep. 27, 1995 (GB) ..... 9519651.5
May 22, 1995 (GB) ..... 9510429.5

**Publication Classification**

(51) **Int. Cl.**[7] ..... **H04N 5/445**; G06F 13/00
(52) **U.S. Cl.** ..... **725/41**; 725/47

## (57) ABSTRACT

A receiver for television signals is arranged to receive video signals comprising video data and information data. The receiver is arranged to respond to viewer operation of a control device (**28**). The receiver includes a processor (**23**) for processing selected information data to convert the same into signals representative thereof for output to a television in combination with the video signals. In one mode of operation the decoder responds to manipulation of the control device by causing brief scheduling information pertaining to programs transmitted in the received signal to be displayed. In another mode of operation the receiver is arranged to display detailed scheduling information pertaining to plural different television signals. The receiver is operable to receive signals containing video data representing a plurality of video clips. The processor is arranged to process the signals and to cause simultaneous display of the clips on a television screen. The processor is arranged to respond to user manipulation of the control device by storing data for subsequent viewing of user selected programs. The decoder may further comprise a modem (**32**) and a CD-ROM drive (**25***a*).

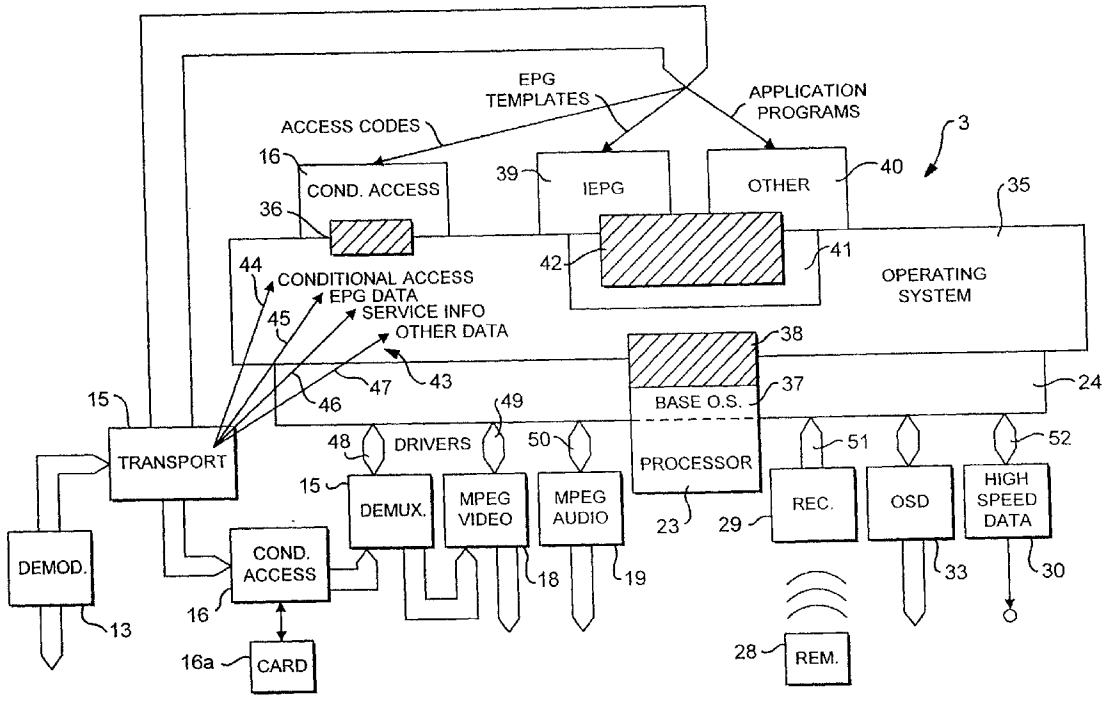

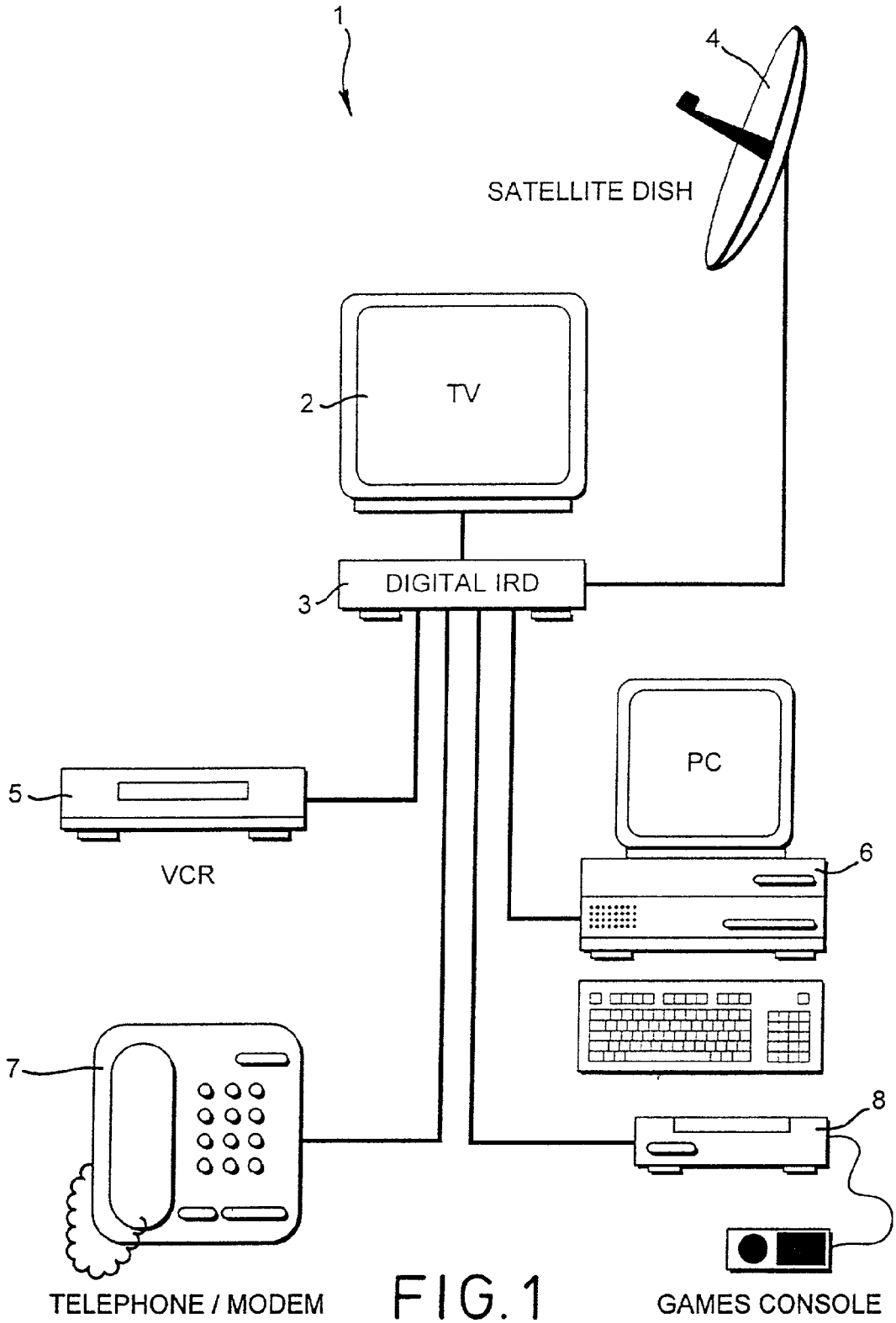
1
4
SATELLITE DISH
TV
2
DIGITAL IRD
3
PC
6
5
VCR
7
8
TELEPHONE / MODEM
GAMES CONSOLE

FIG. 1

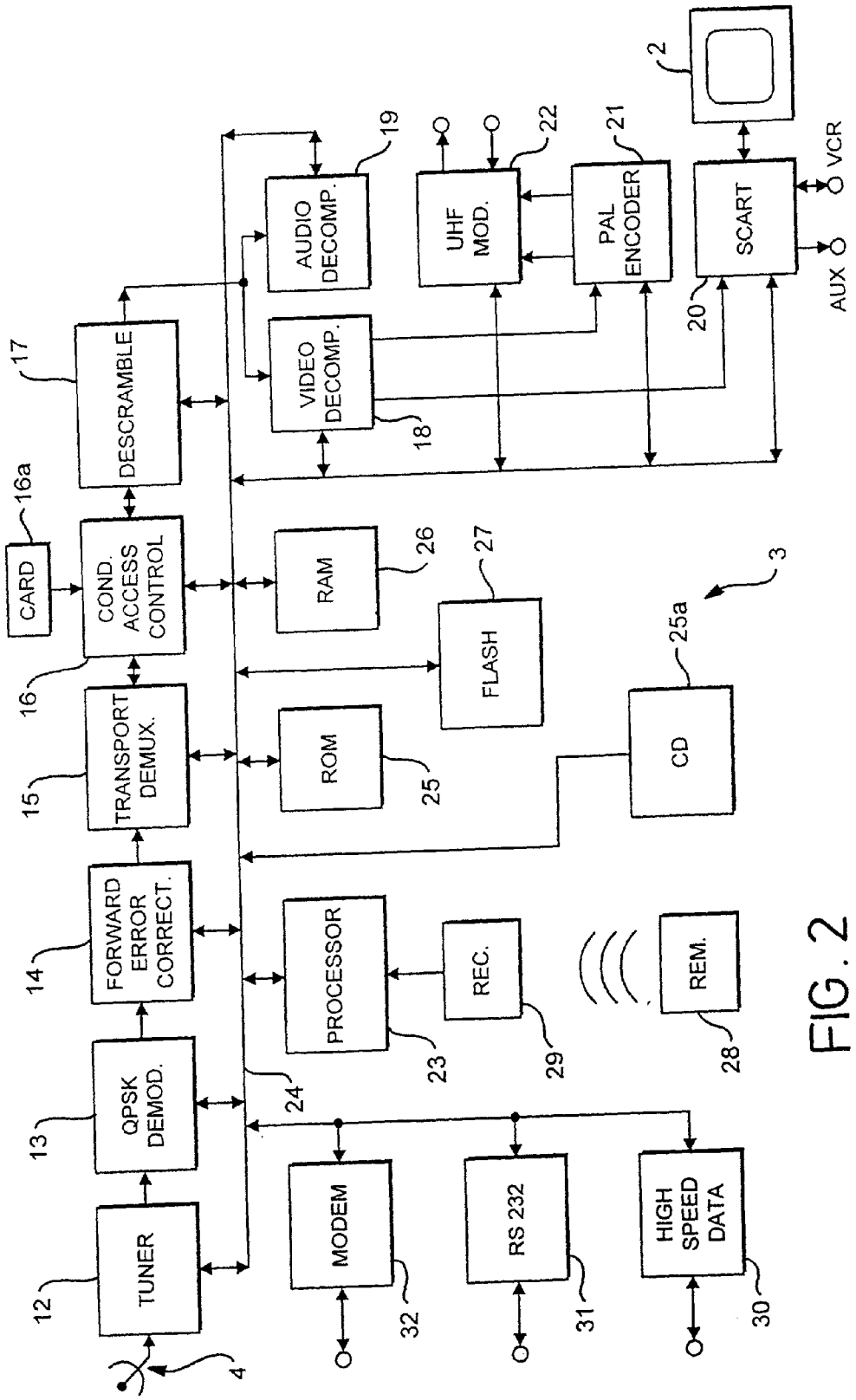
TUNER
12
QPSK DEMOD.
13
FORWARD ERROR CORRECT.
14
TRANSPORT DEMUX.
15
COND. ACCESS CONTROL
16
CARD
16a
DESCRAMBLE
17
VIDEO DECOMP.
18
AUDIO DECOMP.
19
SCART
20
PAL ENCODER
21
UHF MOD.
22
PROCESSOR
23
REC.
29
REM.
28
RAM
26
FLASH
27
ROM
25
CD
25a
MODEM
32
RS 232
31
HIGH SPEED DATA
30
VCR
AUX
2
3
4
24

FIG. 2

FIG. 3

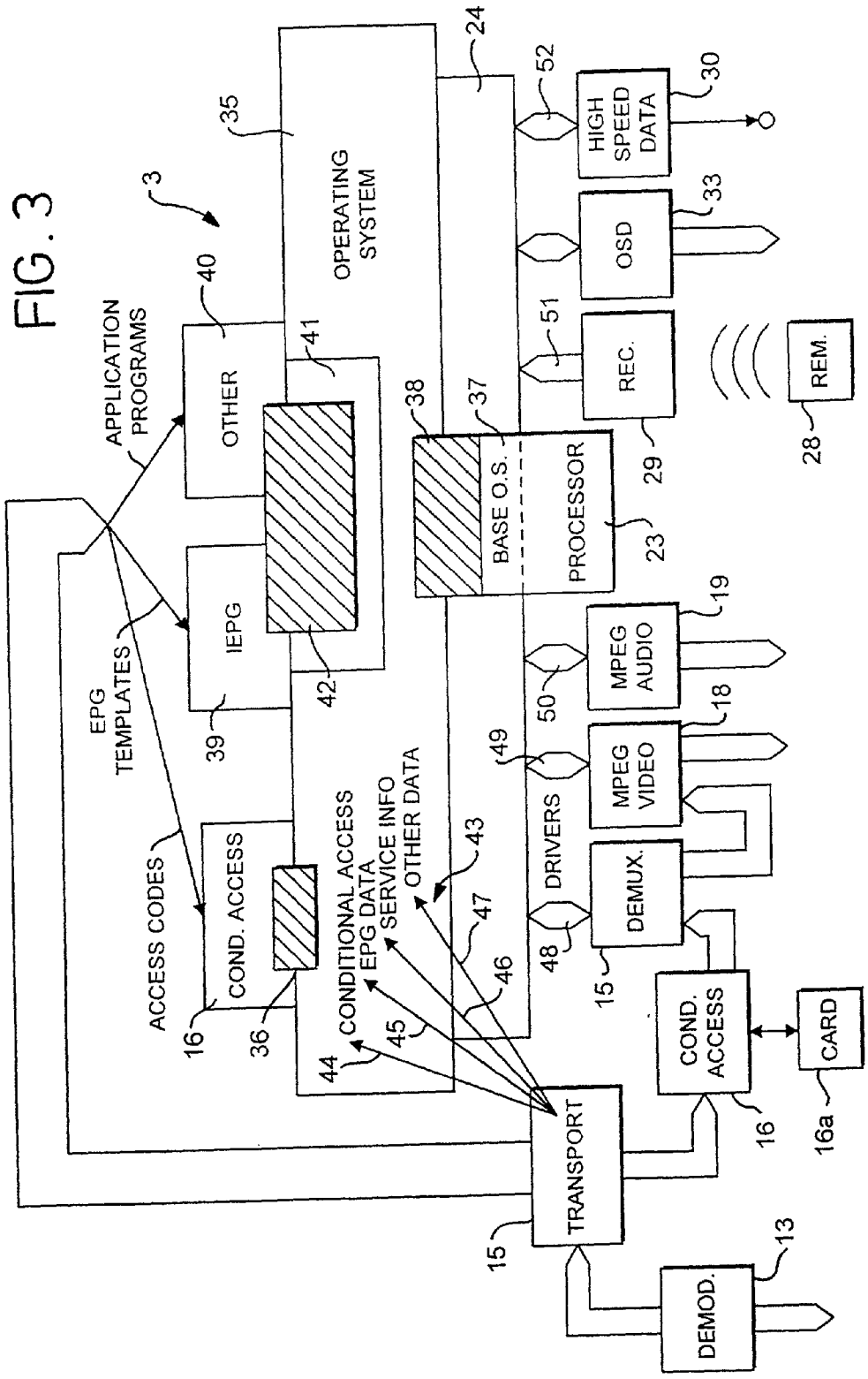
3
OPERATING SYSTEM
35
24
52
HIGH SPEED DATA
30
OSD
33
REC.
51
29
REM.
28
APPLICATION PROGRAMS
OTHER
40
41
IEPG
39
42
EPG TEMPLATES
ACCESS CODES
COND. ACCESS
16
36
CONDITIONAL ACCESS
EPG DATA
SERVICE INFO
OTHER DATA
43
47
46
45
44
38
37
BASE O.S.
PROCESSOR
23
MPEG AUDIO
19
50
MPEG VIDEO
18
49
DRIVERS
DEMUX.
48
15
COND. ACCESS
16
CARD
16a
TRANSPORT
15
DEMOD.
13

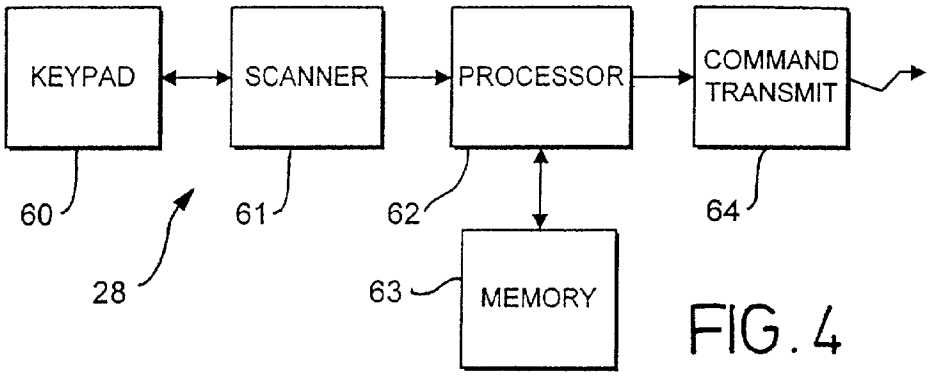
KEYPAD
SCANNER
PROCESSOR
COMMAND TRANSMIT
60
61
62
64
28
63
MEMORY

FIG. 4

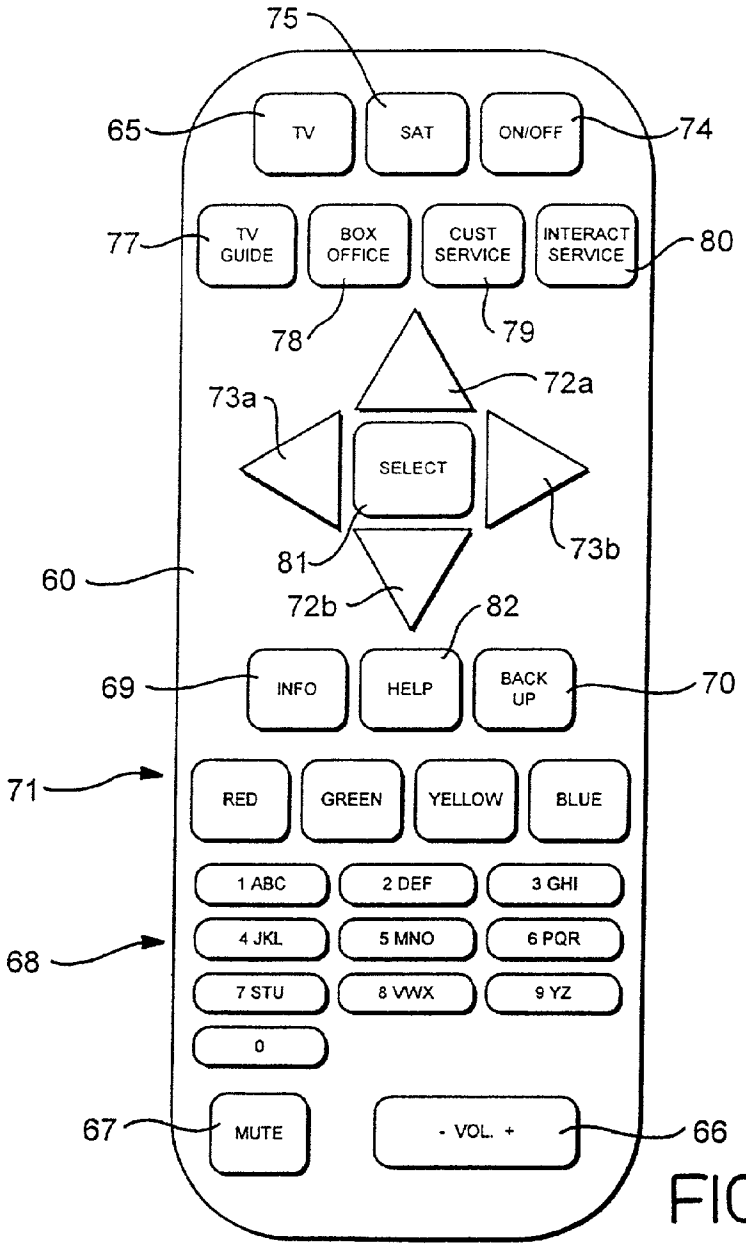
75
65
TV
SAT
ON/OFF
74
77
TV GUIDE
BOX OFFICE
CUST SERVICE
INTERACT SERVICE
80
78
79
73a
72a
SELECT
73b
81
60
72b
82
69
INFO
HELP
BACK UP
70
71
RED
GREEN
YELLOW
BLUE
1 ABC
2 DEF
3 GHI
4 JKL
5 MNO
6 PQR
68
7 STU
8 VWX
9 YZ
0
67
MUTE
- VOL. +
66

FIG. 5

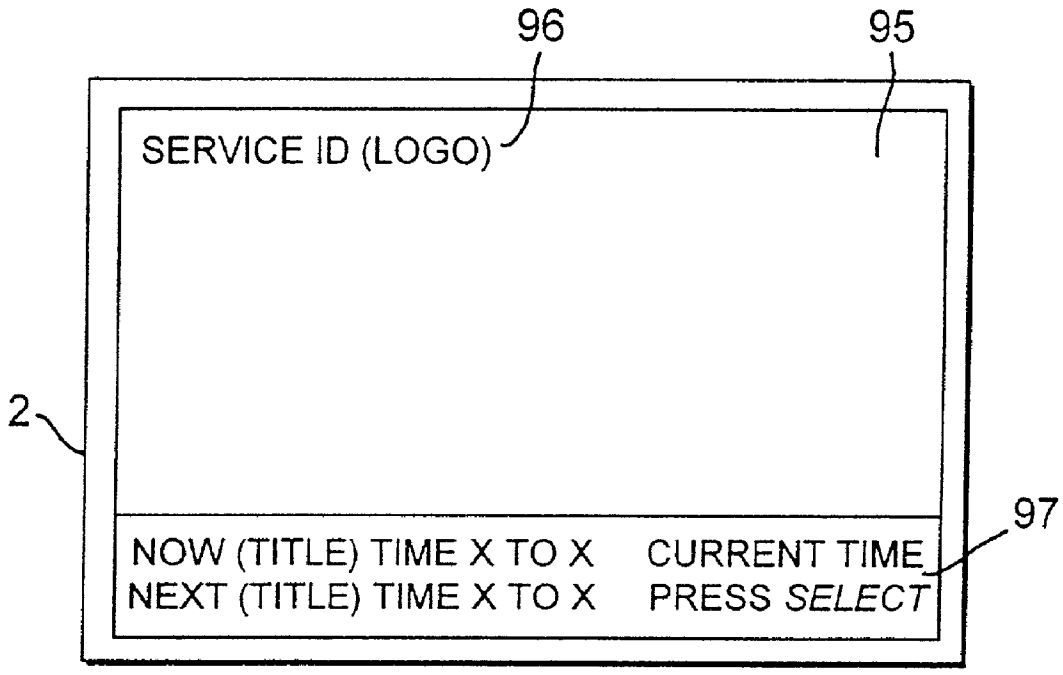
96
95
SERVICE ID (LOGO)
2
97
NOW (TITLE) TIME X TO X
NEXT (TITLE) TIME X TO X
CURRENT TIME
PRESS SELECT

FIG. 6

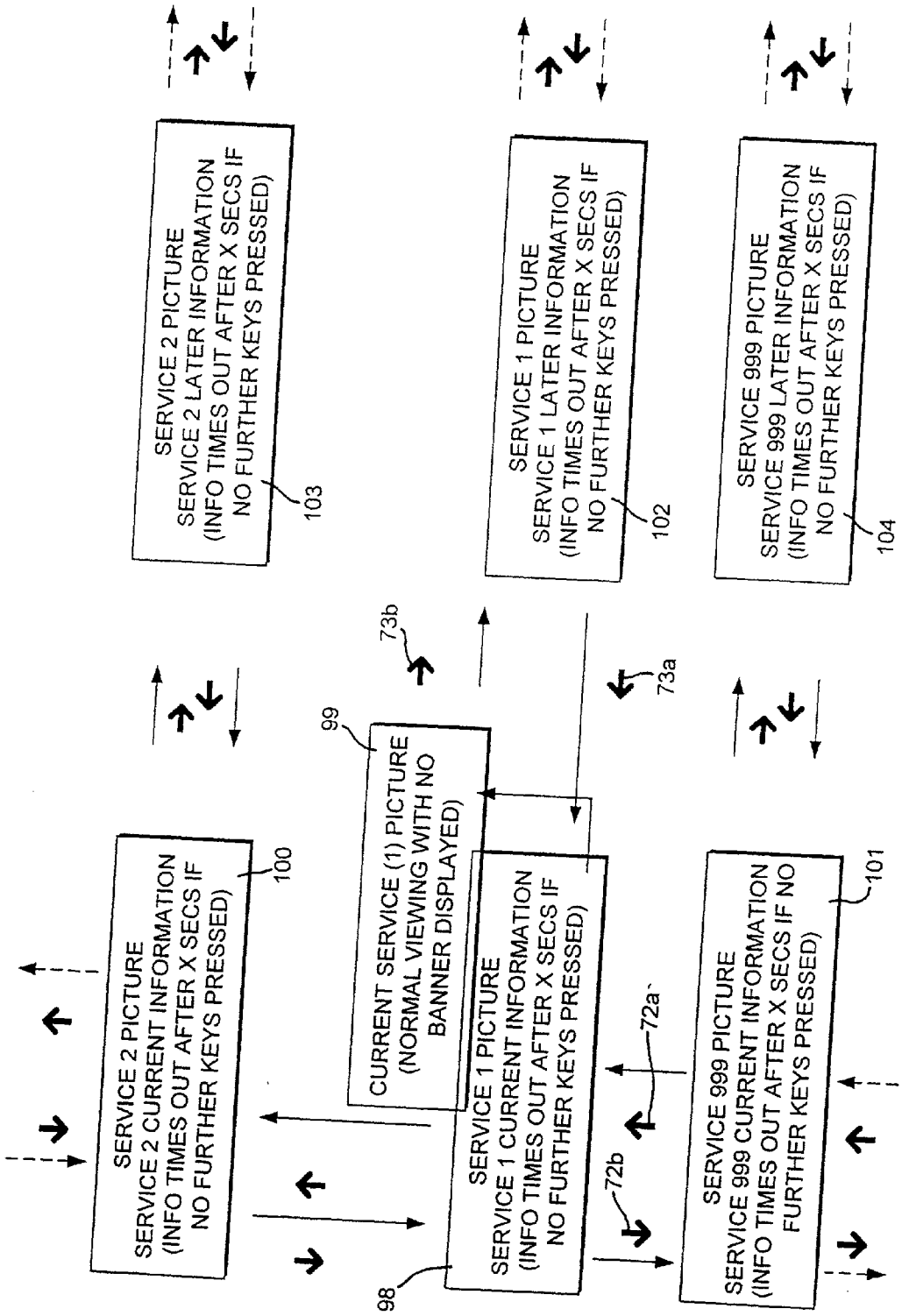
SERVICE 2 PICTURE
SERVICE 2 LATER INFORMATION
(INFO TIMES OUT AFTER X SECS IF
NO FURTHER KEYS PRESSED)
103
SERVICE 1 PICTURE
SERVICE 1 LATER INFORMATION
(INFO TIMES OUT AFTER X SECS IF
NO FURTHER KEYS PRESSED)
102
SERVICE 999 PICTURE
SERVICE 999 LATER INFORMATION
(INFO TIMES OUT AFTER X SECS IF
NO FURTHER KEYS PRESSED)
104
73b
73a
99
CURRENT SERVICE (1) PICTURE
(NORMAL VIEWING WITH NO
BANNER DISPLAYED)
SERVICE 2 PICTURE
SERVICE 2 CURRENT INFORMATION
(INFO TIMES OUT AFTER X SECS IF
NO FURTHER KEYS PRESSED)
100
SERVICE 1 PICTURE
SERVICE 1 CURRENT INFORMATION
(INFO TIMES OUT AFTER X SECS IF
NO FURTHER KEYS PRESSED)
98
72a
72b
SERVICE 999 PICTURE
SERVICE 999 CURRENT INFORMATION
(INFO TIMES OUT AFTER X SECS IF NO
FURTHER KEYS PRESSED)
101

FIG. 7

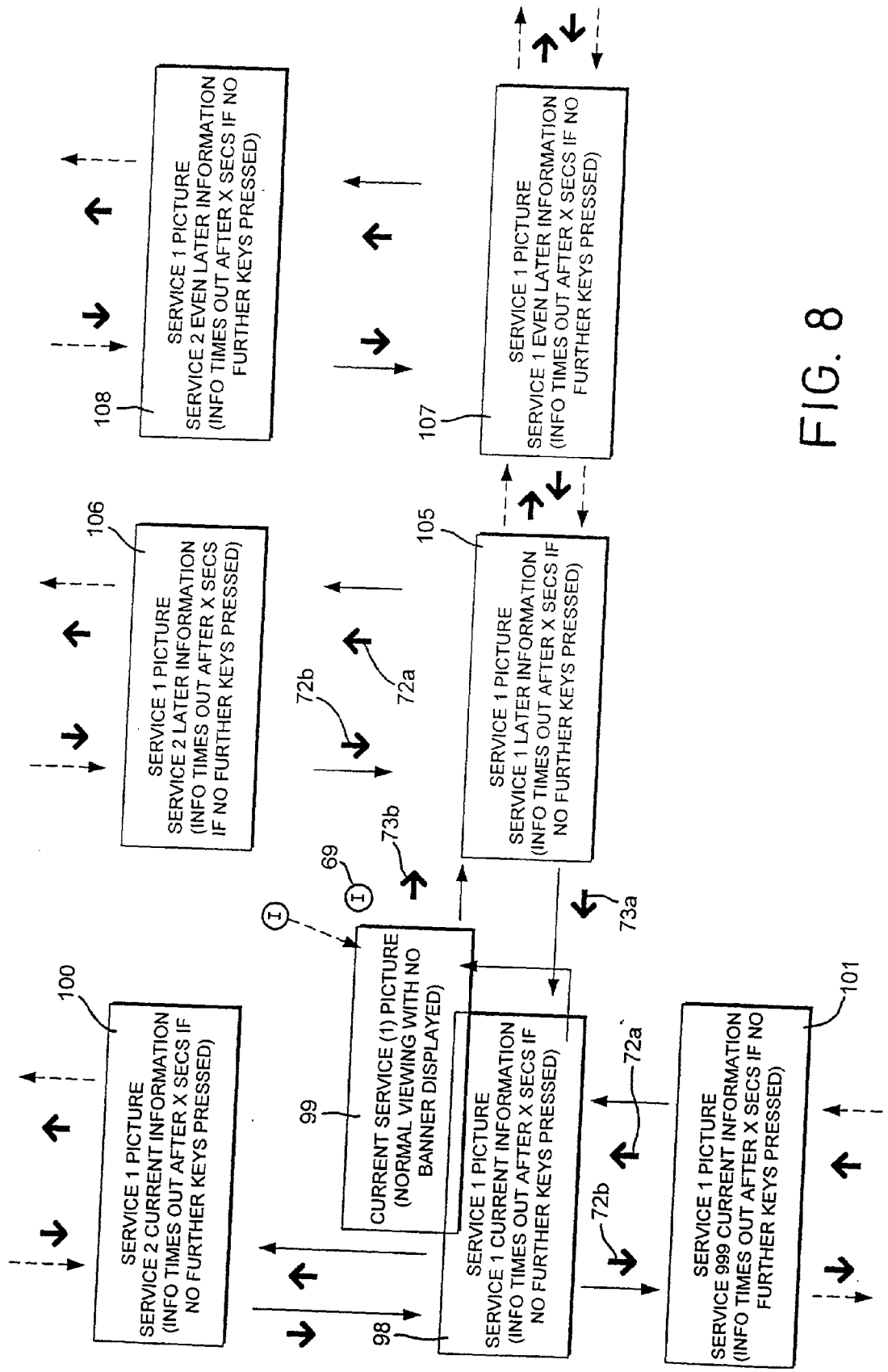
SERVICE 1 PICTURE
SERVICE 2 CURRENT INFORMATION
(INFO TIMES OUT AFTER X SECS IF
NO FURTHER KEYS PRESSED)
100
SERVICE 1 PICTURE
SERVICE 2 LATER INFORMATION
(INFO TIMES OUT AFTER X SECS
IF NO FURTHER KEYS PRESSED)
106
SERVICE 1 PICTURE
SERVICE 2 EVEN LATER INFORMATION
(INFO TIMES OUT AFTER X SECS IF NO
FURTHER KEYS PRESSED)
108
CURRENT SERVICE (1) PICTURE
(NORMAL VIEWING WITH NO
BANNER DISPLAYED)
99
I
69
I
73b
73a
72b
72a
SERVICE 1 PICTURE
SERVICE 1 CURRENT INFORMATION
(INFO TIMES OUT AFTER X SECS IF
NO FURTHER KEYS PRESSED)
98
SERVICE 1 PICTURE
SERVICE 1 LATER INFORMATION
(INFO TIMES OUT AFTER X SECS IF
NO FURTHER KEYS PRESSED)
105
SERVICE 1 PICTURE
SERVICE 1 EVEN LATER INFORMATION
(INFO TIMES OUT AFTER X SECS IF NO
FURTHER KEYS PRESSED)
107
72a'
72b
SERVICE 1 PICTURE
SERVICE 999 CURRENT INFORMATION
(INFO TIMES OUT AFTER X SECS IF NO
FURTHER KEYS PRESSED)
101

FIG. 8

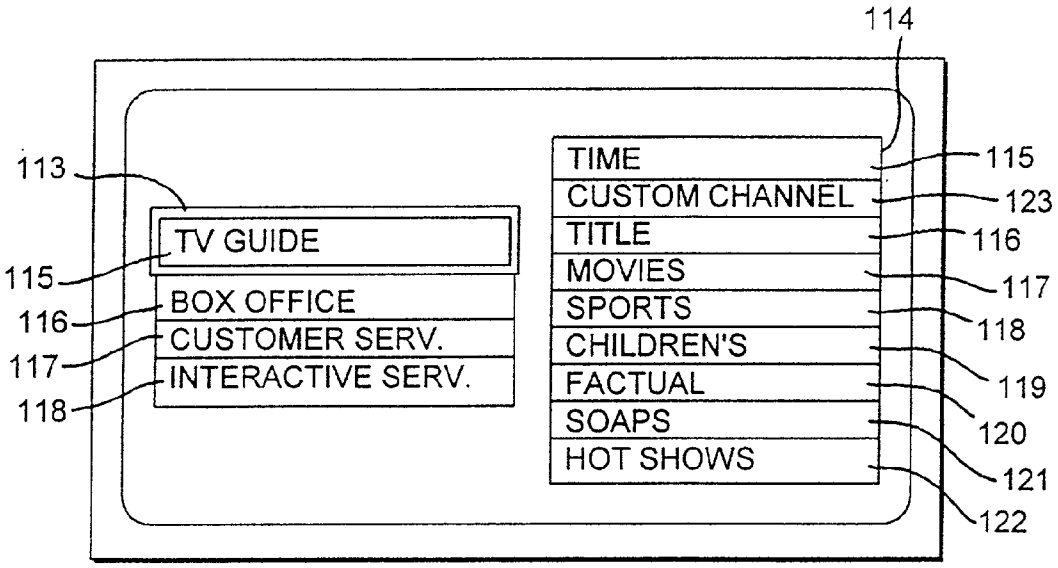
114
113
TV GUIDE
115
BOX OFFICE
116
CUSTOMER SERV.
117
INTERACTIVE SERV.
118
TIME
115
CUSTOM CHANNEL
123
TITLE
116
MOVIES
117
SPORTS
118
CHILDREN'S
119
FACTUAL
120
SOAPS
121
HOT SHOWS
122

FIG 9

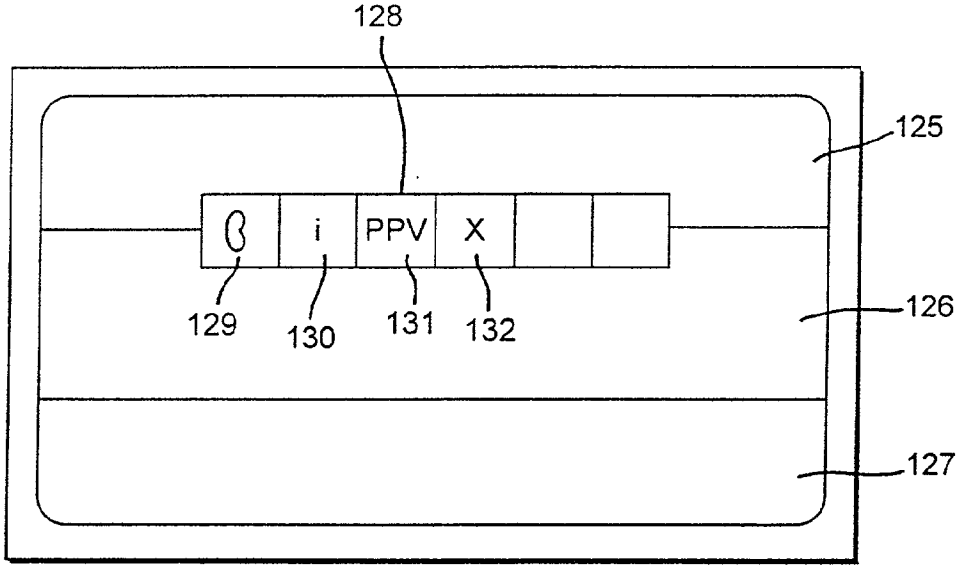
128
125
i
PPV
X
129
130
131
132
126
127

FIG. 10

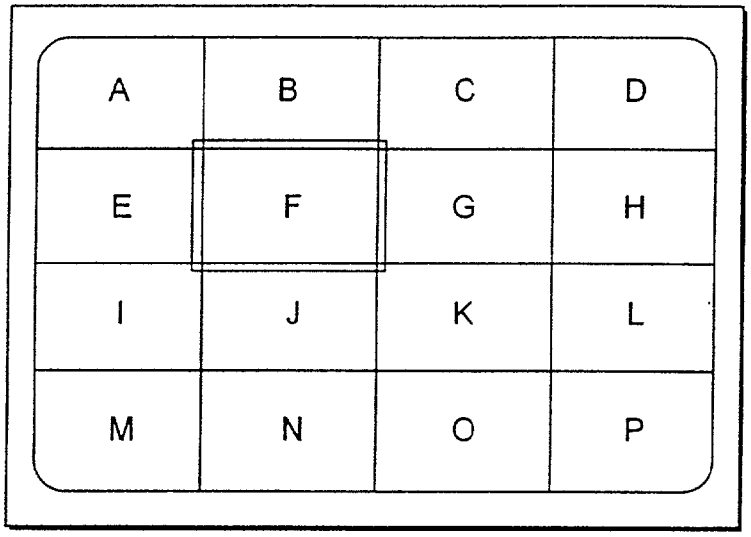
A
B
C
D
E
F
G
H
I
J
K
L
M
N
O
P

FIG. 11

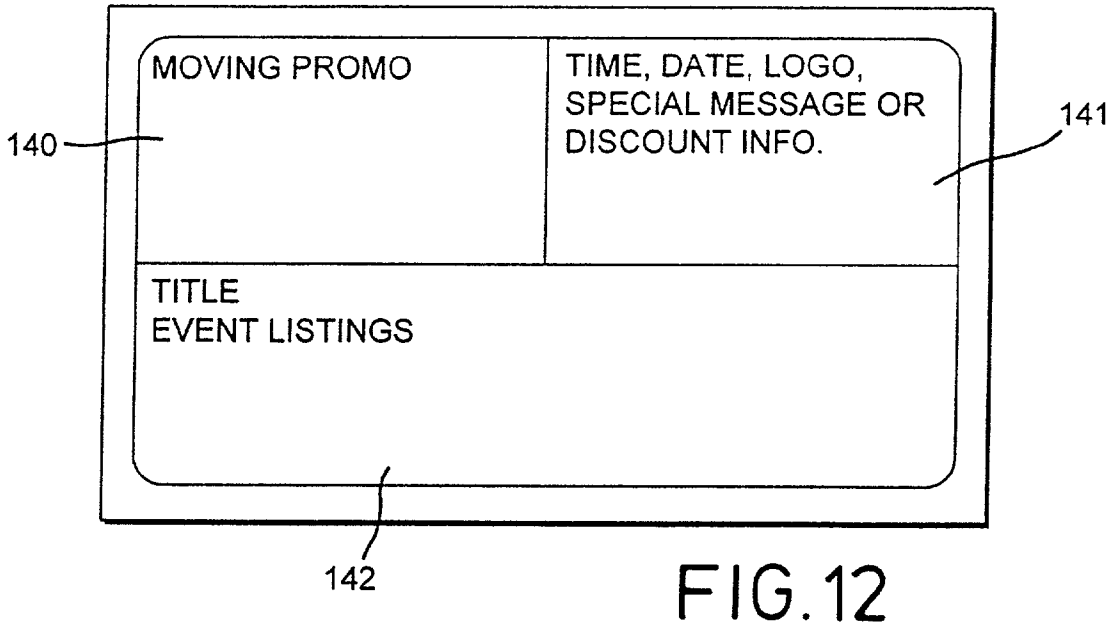
MOVING PROMO
TIME, DATE, LOGO, SPECIAL MESSAGE OR DISCOUNT INFO.
TITLE
EVENT LISTINGS
140
141
142

FIG. 12

# RECEIVERS FOR TELEVISION SIGNALS

[0001] The present invention is a divisional application of U.S. patent application Ser. No. 08/952,603 filed Apr. 23, 1999 which is a national stage filing under 35 U.S.C. §371 of international application No. PCT/GB96/01228, filed May 22, 1996, and claims priority under 35 U.S.C. §119 to Great Britain patent application No. 9519651.5 filed Sep. 27, 1995 and Great Britain patent application No. 9510429.5 filed May 22, 1995.

[0002] The invention relates to improvements in receivers for television signals.

## BACKGROUND OF THE INVENTION

[0003] Originally a television (TV) in a typical home comprised a single unit connectable to an antenna to receive UHF signals broadcast terrestrially in different channels each containing a single television programme from a respective television station. More recent advances in technology have meant that additional equipment, such as video cassette recorders (VCRs) and satellite/cable receiver/decoders (decoders) have become affordable and more widely used. A VCR enables the recording of broadcasts and the playback of previously recorded cassettes. A decoder enables the reception of additional television programmes broadcast in a relatively large number of channels in media using cable or satellite-based technology. Thus, a television system comprising a TV, a VCR and a decoder, enables a user to select for viewing or recording a wide range of terrestrial and satellite/cable programmes and to play back previously recorded programmes. Such a system therefore enables the user to select a programme for viewing from multiple different media.

[0004] As the size of a television system is increased by the addition of extra equipment, control and operation of the system becomes more complex. The VCR and the decoder can be linked to the TV via its UHF input by tuning the TV to receive UHF signals from the VCR in one channel and to receive UHF signals from the decoder in another channel. For this to operate satisfactorily, the VCR and the decoder must each be tuned to output signals in different channels than each other and in channels not used by terrestrial stations. The VCR and the decoder each contain a modulating circuit for placing the signals onto a UHF carrier so that the signals can be demodulated by the receiver within the TV. Such modulation and demodulation is undesirable because it results in some degradation (albeit generally undetectable by the viewer) in the programme from the VCR or decoder.

[0005] These problems can to some extent be avoided by the use of so-called SCART connectors between the TV, the VCR and the decoder. The SCART system avoids the unnecessary use of UHF carriers by providing a direct path between the VCR, the decoder and the TV. The SCART system includes control lines that enable the VCR to override signals from the TV receiver, thereby causing the programme from the VCR to be displayed on the TV screen, and similarly enable the decoder to override signals from both the TV receiver and the VCR so that the programme from the decoder is displayed on the TV screen. The use of SCART connectors thus simplifies connection between, and selection of, the TV, the VCR and the decoder.

[0006] However, the SCART system does not overcome the problem of user-friendly control and use of the system. Separate controls (usually in the form of remote handsets) are provided for each of the TV, the VCR and the decoder. Recording a satellite/cable programme on the VCR requires the user to programme the VCR at the required time and to programme the decoder to switch on to the required satellite/cable programme at the required time. While this is not difficult for viewers possessed of the appropriate skills, it is too much for a large number of viewers who find such technology bewildering.

[0007] At present most broadcasting, regardless of media, is analog based and comprises a single television service (e.g. SKY ONE, SKY SPORTS, SKY MOVIES) transmitted on a carrier signal or channel. However, the use of digital based broadcast technology is imminent. Digital broadcast technology will enable television service companies to transmit in a single channel high definition television programmes, or plural programmes at conventional definition or multiple customer services, or a combination of these.

[0008] In a conventional analogue-based television broadcast system programmes (or "services") are broadcast by separate television service companies on a single carrier signal ("channel"). In a digital based broadcast system it is possible to broadcast plural services multiplexed together on a single carrier. Unless the context requires otherwise the term "channel" will be used herein to refer to the bandwidth used by a single service to broadcast television programmes or other customer services. The term "channel" therefore encompasses both an entire carrier signal (when the signal is used entirely by a single service) and a portion of a carrier signal (when the signal is shared by plural services).

[0009] The ability to transmit multiple channels in a single carrier signal enables a far greater number of services to be provided in the digital domain than is possible in the analogue domain. Some of the channels in a carrier may be used to provide conventional television programmes while simultaneously other channels in the carrier are used to provide data for other customer services such as television programme listings, on-line programme ordering or so-called pay-per-view (PPV) services, and so on. Customer services should not be confused with the "services" provided by television companies as discussed hereinabove.

[0010] Clearly, as digital broadcasting technology is adopted by the station, the abovediscussed problems will increase.

[0011] The invention aims to provide a greater degree of integration within a television system.

[0012] The invention also aims to simplify user control over a television system. In an embodiment of the invention to be described in greater detail hereinbelow, this simplification is achieved by making the control more user friendly by making it more intuitive.

[0013] In one aspect the invention provides a remote control device for controlling a television system including a plurality of independently controllable units, the device comprising plural user selectable keys and being arranged to response to user selection of a key by transmitting separate command signals to each of the independently controllable units to cause the television systems to be configured in a first mode and thereafter responding to further user selection

of the keys by transmitting command signals pertinent to the first mode of the television system.

[0014] In another aspect the invention provides a receiver for receiving digital television signals transmitted in a plurality of channels each comprising video data and information data the receiver comprising: a decoder circuit operable on one selected channel for separating in the one channel the information data and the video data and converting the video data into signals for output for a television; a store for storing information data; a viewer operable control device; and a processor connected to receive the information data from the decoder circuit and/or the store, the processor being arranged to respond to viewer operation of the control device by processing selected information data to convert the same into signals representative thereof for output for a television in combination with the video signals.

[0015] In a farther aspect the invention provides a receiver for receiving television signals in a plurality of channels, each signal comprising video data defining a television programme and programme scheduling data defining the scheduling of programmes in the plurality of channels as scheduling events, the receiver being arranged to produce from a received television signal output signals defining an image of the television programme and an image of scheduling events for display on a television screen, the receiver comprising a user operable selector operable to select for display a schedule of events for one channel while displaying a television programme in another channel or to select for display a television programme in one channel while displaying a schedule of events for the one channel or another channel.

[0016] In another aspect the invention provides a receiver for receiving television signals defining television programmes in a plurality of channels, the receiver being arranged to produce output signals defining a plurality of video clips representing television programs available in the plural signal channels which output signals are output for display of the clips in respective areas on a television screen, the receiver comprising a user operable selector operable to select one of the displayed clips and responding to such user selection by storing data to cause the receiver to receive the television signals when the programme is transmitted in the corresponding channel for display of the programme on a television screen.

[0017] In a further aspect the invention provides a receiver for receiving television signals in a plurality of channels each defining a television programme and at least a signal in one of the channels further comprising programme scheduling data defining events in terms of channels, programmes and broadcast times, the receiver being arranged to produce output signals defining an image of events in the programme schedule for displaying on a television screen, the receiver comprising a user operable selector operable to select events identified in the displayed programme schedule and responding to such user selection by storing data to cause the receiver to receive television signals defining the programmes in the channels and at the times corresponding to the selected events.

[0018] In another aspect the invention provides a receiver for receiving a television signal comprising video data defining a video picture and information data defining information relating to user selectable services, the receiver being arranged to produce output signals defining an image representing available services for display on a television screen, the receiver comprising a user operable selector operable to select a displayed service and a modem responsive to such user selection for establishing a connection via a telephone line to a provider of the selected service.

[0019] In a further aspect the invention provides a receiver for receiving a television signal comprising video data defining a video picture and message data defining messages or information to be received by a destination specified by an identity code, the receiver being arranged to produce output signals defining the video picture for display on a television screen, the receiver having a unique identity code and being arranged to respond to reception of message data having an identity code corresponding to the unique identity code by producing output signals representing the message or information in the message data for display on a television screen.

[0020] The above and further features of the invention are set forth with particularity in the appended claims and together with advantages thereof will become clearer from consideration of the following detailed description of an exemplary embodiment of the invention given with reference to the accompanying drawings.

## BRIEF DESCRIPTION OF THE DRAWINGS

[0021] In the drawings:

[0022] **FIG. 1** is a schematic diagram of a television receiver system;

[0023] **FIG. 2** is a functional block diagram of a satellite decoder;

[0024] **FIG. 3** is a functional diagram showing interaction between hardware and software of the decoder of **FIG. 2**;

[0025] **FIG. 4** is a schematic functional diagram of a remote control unit;

[0026] **FIG. 5** is a schematic diagram of a keypad of the remote control unit;

[0027] **FIG. 6** is a schematic representation of a screen displayed when changing channels;

[0028] **FIG. 7** is a flow diagram representing a "surf" function;

[0029] **FIG. 8** is a flow diagram representing a "search" function;

[0030] **FIG. 9** is a schematic representation of an IEPG screen;

[0031] **FIG. 10** is a schematic representation of a TV Guide screen;

[0032] **FIG. 11** is a schematic representation of a programme mosaic screen; and

[0033] **FIG. 12** is a schematic representation of a Box Office screen.

## DETAILED DESCRIPTION OF AN EMBODIMENT OF THE INVENTION

[0034] System Overview

[0035] Referring now to **FIG. 1** of the accompanying drawings a television receiver system **1** comprises a television (TV), a digital integrated receiver decoder **3** (decoder) connected to receive signals from a satellite dish antenna **4**, and a video cassette recorder **5** (VCR). The system **1** optionally further comprises a personal computer **6** (PC) a telephone/modem **7** and a games console **8** each connected via respective lines to the decoder **3**. SCART connectors or other standard connectors may be used as appropriate. The decoder **3** acts as an interface between the TV **2** and the VCR **5**, PC **6**, modem **7** and games console **8** and thus serves to control the system **1**.

[0036] **FIG. 2** of the accompanying drawings shows the decoder **3** in greater detail. The dish antenna receives signals from a satellite (not shown).

[0037] Signals from the dish antenna **4** are input to a tuner **12** and from there to a quadrature phase shift key (QPSK) demodulator **13**. Demodulated signals are error corrected by way of a forward error corrector circuit **14**. Data from the forward error corrector circuit is supplied to a transport/demultiplexer **15** which separates the data into video data, audio data, user services data, programme scheduling data, etc. for distribution to various locations within the decoder. Satellite (and indeed cable) programmes are usually scrambled to prevent unauthorised access by non-authorised subscribers. The decoder **3** therefore comprises a conditional access control circuit **16** which cooperates with a smart card **16***a* to determine whether the viewer has subscribed to a particular channel and is therefore authorised to access the channel. Parental control over channel access is also provided, at least in part, by the access control circuit **16**. The decoder **3** further comprises a descrambling circuit **17** which is controlled by the access control circuit **16** to enable the descrambling of the signal by authorised subscribers.

[0038] The received signals comprise digitally encoded data. It is envisaged that the data will be compressed using for example the MPEG **2** standard which permits both programme data and additional data (for example customer service data) to be transmitted in a single channel. MPEG **2** enables high compression ratios to be achieved.

[0039] Descrambled signals from the descrambling circuit **17** are input to a video decompression and processing circuit **18** and an audio decompression and processing circuit **19**, operating according to the MPEG standard for example. Decompressed video signals are input to a SCART interface **20** for direct input to the TV **2** and to a PAL encoder **21** where they are encoded into the PAL format for modulation by a UHF modulator **22** for output to the UHF input of the TV if so desired.

[0040] The system **3** is controlled by a processor **23** which communicates with the various units of the system via a bus **24**. The processor **23** has associated with it ROM **25** (optionally including a CD-ROM drive **25***a*), RAM **26** (comprising both dynamic RAM and static RAM) and a flash (non-volatile and writable) memory **27**. As will be explained in greater detail hereinafter the processor **23** controls operation of the decoder **3** by controlling the tuner **12** to receive signals for the desired channel from the dish antenna **4** and to control demultiplexing, descrambling and decompression so that the desired programme and/or customer service data is displayed on the screen of the TV **2**. Viewer selection of desired programmes and customer services is controlled by way of a remote control unit **28** which in response to viewer manipulation thereof transmits control signals to a receiver **29** for input to the processor **23**.

[0041] The system **3** further comprises a high-speed data interface **30** and an RS232 interface **31** providing a serial link. The high-speed data interface **30** and the RS232 interface may be connected to the PC **6** and/or the games console **8** of **FIG. 1**. The decoder **3** further comprises a modem interface **32** for connecting to the telephone/modem **7** of **FIG. 1**.

[0042] Operation of the decoder **3**, especially the processor **23**, is controlled by software that makes the processor **23** responsive to control signals from the remote control unit **28** and to data included in the signal received by the dish antenna **4** and in the memory units **25** to **27**. A schematic representation of the interaction between hardware and software in the decoder **3** is shown in **FIG. 3** of the accompanying drawings. The data in an incoming signal is separated by the transporter **15** into video data and information data. The information data is distributed around the hardware and software, as will be described in greater detail hereinafter. The video data and the audio data is demultiplexed and output in suitable form for supply to a TV by the MPEG video and audio circuits **18** and **19**. When information is to be displayed either with or instead of the video, data representing the information is output in suitable form for supply to the TV via an on-screen driver **33** and the video circuit **18**. Signals from the OSD driver **33** and the video circuit **18** are combined as appropriate before being supplied to the TV. Operation of the software and hardware of the decoder **3** is based around an operating system **35**. The conditional access controller **16** has associated software which interfaces with the operating system via an application translator **36**. The processor **23** has its own base operating system **37** which interfaces to the decoder operating system **35** via an application translator **38**. Applications such as an intelligent electronic programming guide (IEPG) **39** and other applications **40** interface to the operating system **35** via an applications interface **41** and associated application translator **42**.

[0043] The software for applications such as the conditional access **16** and the intelligent electronic programming guide **39** are installed permanently within non-volatile memory, e.g. the ROM **25**, of the decoder **3**, but variable information such as new access codes and TV programme scheduling details is updated regularly via signals received from the dish antenna **4**. Demodulated signals from the demodulator **13** are input to the transport portion of the transport demultiplexer **15** which examines the data to decide where it should be sent. From time to time significant changes may be made to conditional access codes or to the manner in which the intelligent electronic programme guide (IEPG) **39** displays programme information. Also, programmes for new applications, say a new banking service for example, may be supplied via the satellite for the decoder. Such data is routed by the transporter **15** directly to the conditional access controller **16**, the IEPG **39** and areas of the store for other applications **40**.

[0044] Operating data **43** is supplied on a substantially continuous basis in every channel. The operating data **43** includes conditional access data **44** associated with a channel and/or programmes therein which enables the conditional access controller **16** to determine whether or not access should be allowed to a particular programme by descrambling the data therefor. Additionally, operating data relating to customer services is transmitted in dedicated channels which will be referred to herein as IEPG channels because they carry control and information data for use by the IEPG provided by the hardware and software of the processor **23** and the associated memory devices **25** to **27**. Thus, the operating data **43** depicted in **FIG. 3** also includes IEPG data **45** relating to specific programmes and the times at which those programmes will be broadcast, and service information **46** (for example relating to personal banking services) and indeed any other data **47** required on a substantially continuous or regular basis for the aforementioned customer services.

[0045] The transporter **15** is arranged to supply the operating data **43** to the processor **23** via the operating system **35**. The processor **23** responds to the data by sending appropriate commands or information to other units within the system. Control data is also transferred between the processor **23** and such units as the demultiplexer **15**, the video and audio decompressors **18, 19**, the remote control receiver **29** and the high-speed data interface **30** via respective drivers **48** to **52**.

[0046] The combined hardware and software of the decoder **3** enables the data in received channels to be decoded for display of viewer selected programmes and customer services. The scrambling is controlled on a continuous basis and the decoder can be updated with new descrambling codes as and when required. Data for customer services can also be supplied and updated substantially continuously and programmes relating to new services and applications can be down loaded into the decoder if so desired.

[0047] Remote Control Unit

[0048] Turning now to **FIG. 4** of the accompanying drawings, the remote control unit **28** comprises a keypad **60** which is scanned by a scanner **61**. In response to manipulation of a key by the viewer, the scanner **61** outputs a code representing the viewer selected key to a processor **62**. The processor **62** has associated with it a memory **63** containing programme data defining how the processor **62** should respond to codes from the scanner **61**. The processor **62** is connected to control a command transmitter **64** including for example an infrared light emitting diode (not shown) for transmitting signals to the TV, the decoder **3** and the VCR **5** of the system shown in **FIG. 1**. Data defining the codes for transmission by the transmitter are stored in the memory **63**. The memory **63** includes codes for the vast majority of televisions available in a given market (e.g. the UK market) and can therefore be said to be a "universal" remote control. Viewer selection of appropriate codes from the memory **63** can be made by any one of a large number of well known methods and therefore will not be described in further detail herein.

[0049] The keys comprising the keypad **60** are shown in greater detail in **FIG. 5** of the accompanying drawings. For the purpose of simplicity it will be assumed that control over the TV **2** and the decoder **3** only is required and that control over the VCR and other units is not required. It will, of course, be appreciated that the principles of operation of the remote control **28** in controlling the TV **2** and the decoder **3** can easily be extended to controlling also the VCR **5** and any other remotely controllable apparatus comprising the system **1**.

[0050] The keypad **60** includes a TV key **65** which causes the remote control to function as a controller for the TV **1**. When the TV key **65** is pressed the processor **62** responds by causing the transmitter **64** to transmit a command to the decoder to enter a standby mode in which signals are not transmitted via the SCART interface **20** (i.e. SCART pin **8** to the TV is set low). The transmitter also transmits a command to the TV **2** to select a predetermined channel, e.g. channel **1**. Thus, the system **1** is controlled by the remote control unit **28** to operate in a television configuration in which the television receives terrestrial-based signals.

[0051] Once the command signals have been transmitted to the TV **2** and the decoder **3**, the processor **62** in the remote control enters a mode corresponding to the television configuration of the system **1**. In the television mode the remote control unit **28** responds to viewer operation of keys on the keypad **60** by transmitting command signals exclusively for the TV **2**.

[0052] Most, if not all, of the functions of the TV controlled by the various keys of the keypad **60** shown in **FIG. 5** should be self-apparent, but for the sake of completeness the following comments will be made. The audio volume is controlled by a volume control key **66** so-arranged that pressing the left-hand side thereof reduces the volume of sound output from the TV and pressing the right-hand side increases the volume. Pressing a mute key **67** causes the remote control unit **28** to transmit a command to mute the sound from the TV. A set of ten numeric keys **68** control TV channel selection.

[0053] A key **69** carrying the legend "INFO" causes the television to enter a teletext mode when first pressed (assuming the TV has a teletext facility). Depending on the make and model of the TV, further operation of the key **69** will cause the television to toggle between "TEXT", "MIX", and "TV" teletext modes. The teletext mode is exited by pressing a key with the legend "BACKUP"**70**. A set of four coloured keys **71** (red, green, yellow and blue) enable so-called fast-text facilities to be utilised with the TV in teletext mode.

[0054] Pressing an upwardly pointing key (up key) **72***a* causes the TV to step up through the channels in the logical order in which they are tuned and pressing the downwardly pointing key (down key) **72***b* causes the TV to step down through the channels. The keypad also includes left and right keys **73***a* and **73***b* that serve no function when the remote control unit **28** is operating in the TV mode, but are used together with the up and down keys **72**, **72***b* to navigate around the IEPG when the system is in a satellite configuration.

[0055] The keypad includes an on/off key **74** for causing the TV to switch between an on mode and a standby mode. The keypad further comprises a "SAT" key **75**, the selection of which causes the remote control unit **28** to transmit command signals to the system **1** causing it to operate in a satellite configuration. When the SAT key **75** is pressed the

processor **62** responds by causing the transmitter **64** to transmit a command to the decoder **3** to enter a receive mode in which signals are received from the satellite dish **4**, and received signals are decoded and transmitted via the SCART interface **20** to the TV **2**. A command is also sent to the TV **2**, if appropriate, so that TV receives signals transmitted by the SCART interface **20**. If the TV **2** is not connected to the decoder **3** via a SCART lead, then the commands can be varied to ensure that the TV **2** instead receives signals via the UHF modulator **22**. Thus the system **1** is controlled to operate in a satellite configuration in which the decoder **3** receives satellite-based signals which are decoded and output in appropriate form to the TV **2**.

[**0056**] Once the command signals have been transmitted to the TV **2** and the decoder **3**, the processor in the remote control enters a satellite mode corresponding to the satellite configuration of the system **1**. In the satellite mode, the remote control unit **28** responds to viewer operation of keys on the keypad **60** by transmitting command signals both to the TV **2** and to the decoder **3** as appropriate.

[**0057**] Digital signals in the channels received via the satellite dish **4** contain programme schedule information which can be displayed under viewer control on the TV **2** when the system **1** is in the satellite configuration. That is to say, the decoder **3** can be controlled by way of the remote control unit **28** to operate as the intelligent electronic programme guide (IEPG) by causing the TV to display information relating to programme schedules, customer services and the like.

[**0058**] The remote control keypad **60** comprises a TV guide key **77**, selection of which causes the decoder **3** to output for display a TV guide main menu or screen. Similarly, selecting a box office key **78**, a customer service key **79** or an interactive service key **80** will cause the decoder to select an appropriate menu or screen for display to enable viewer interaction. The processor **62** is arranged to respond intelligently to the selection of any of the keys **77** to **80**. If the system **1** (and therefore also the remote control **28**) is in TV mode when any of the keys **77** to **80** are depressed, the processor **62** of the remote control responds by transmitting appropriate signals to the TV **2** and the decoder **3** to place the system **1** in the satellite configuration. The processor **62** then causes the remote control **28** to enter the satellite mode.

[**0059**] The remote control keypad **60** also includes a select key **81** provided to enable user interaction with IEPG screens displayed on the TV screen. The select key also enables interaction with other information displayed on the TV screen. A help key **82** causes the decoder to output for display help information. The processor **23** is arranged to respond intelligently by displaying help information appropriate to the IEPG screen displayed on the TV monitor when the help key **82** is selected. Selection of the info key **69** similarly causes the transmission of commands to the decoder causing the decoder processor **23** to output for display appropriate information depending on the IEPG menu displayed on the screen of the TV **2** when the info key **69** is selected.

[**0060**] When the remote control **28** is operating in the satellite mode, the processor **62** therein is arranged to respond to selection of any of the coloured keys **71** by transmitting so-called quick response commands to the decoder. The manner in which the decoder responds to the selection of the coloured keys **71** is software controlled and will vary between IEPG screens as will be described in greater detail hereinafter.

[**0061**] Decoder Functions

[**0062**] The decoder **3** provides several facilities based on information stored in the memory **25** to **27** of the decoder, information transmitted with video in television channels and information transmitted in dedicated IEPG channels. The facilities provided by the decoder will be described under separate headings as follows.

[**0063**] Surf, Search and Scan

[**0064**] It is envisaged that the data in each channel will be in compressed form, for example in accordance with the DVB/MPEG-2 standard. DVB allows both video data and other data to be combined in a single channel. In addition to the aforementioned operating data **43** (see **FIG. 3**) for use in controlling access to channels, the data in a channel can include brief programme scheduling data defining the scheduling of programmes in several of the channels as scheduling events.

[**0065**] One the scheduling data has been stored in the RAM the information relating thereto is available effectively instantaneously for display on the TV. The scheduling data is transmitted regularly (say every **10** seconds) so that the decoders are updated quickly after they are switched on. The information is brief (e.g. title of programme and its start and end times) and only covers a short period of time (e.g. 24 or 48 hours) to enable each channel to carry data for other channels provided by the same TV service company without excessive overheads in terms of bandwidth requirements in each channel and memory requirements in the decoder.

[**0066**] The decoder is arranged to enable a schedule of events for one channel to be displayed while displaying a television programme in another channel or to display a television programme in one channel while displaying a schedule of events for the one channel or another channel. These facilities (which will be referred to herein as "surf", "search" and "scan") allow the viewer to search through the programme scheduling information down-loaded from the received signals into the RAM **26** using the up and down keys **72***a*, **72***b* together with the left and right keys **73***a*, **73***b* on the remote control unit **28**. The "surf" feature allows the viewer to change channels and to view for the current channel scheduling information for the present programme and for the next scheduled programme simply by pressing the up and down keys **72**, **72***b* on the remote control keypad **60**. The "search" feature allows the viewer to move forward and backward in time through scheduling information for the current channel. Scheduling information for past programmes is deleted once the programme has finished. The "scan" feature is a combination of the "surf" and "search" features and allows a viewer to view the video for the current channel while inspecting scheduling information for other channels.

[**0067**] The processor **23** of the decoder is arranged so that the surf mode is entered simply by the viewer pressing the up and down keys **72***a*, **72***b*. When one of the keys **72***a*, **72***b* is depressed the decoder responds by selecting another channel and thereafter outputting the video and audio for that channel to the TV **2**. The processor adds information signals to the video signal so that the screen displayed on the

TV **2** is similar to the screen shown in **FIG. 6** of the accompanying drawings. The screen displayed on the TV comprises a programme portion **95** containing both the video for the selected channel and a channel identifier **96** and an information portion **97** containing information about the programme currently being received including its title and scheduling information and information about the next programme to be broadcast in the channel including its title and scheduling information. Other information such as the current time and instructions regarding the selection of programmes for other decoder features (e.g. the custom channel to be described in greater detail hereinafter) are also displayed in the information portion **97**.

[**0068**] The surf feature and the search feature are shown in greater detail in **FIG. 7** of the accompanying drawings. First the surf feature. When either of the up or down keys **72***a*, **72***b* are depressed the processor **23** causes the TV to display the current service picture (say service **1**) and information relating to that service. This is represented by the box **98** in **FIG. 7**. If no further keys are pressed within the predetermined period, the processor removes the service information from the display as represented by box **99**. If the up key **72***a* is depressed the processor is arranged to select the next logical service (i.e. service **2**) and to cause the TV to display the picture therefore together with information relating thereto as represented by box **100**. If the down arrow is instead depressed the processor will cause the TV to display the previous service picture together with information relating thereto as represented by box **101**. It should be noted that in box **91** service number **999** has been identified. This assumes that the decoder is able to receive **999** different services. The logic of the decoder is such that when the lowest number service is displayed pressing the down button will cause the receiver to select for display the highest number service and vice versa. Movement between the boxes **98**, **100**, **101** and other boxes relating to other service numbers (not shown) is, of course, controlled by the up and down keys of the remote control **28**. In the case of each box **98**, **100**, **101** the information portion for the service is removed so that only the picture is displayed if no further keys are selected on the remote control after a predetermined period of time, say ten seconds.

[**0069**] While the information is being displayed the viewer may use the search feature by selecting either the left or right key **73***a*, **73***b*. The right key is used to move forward in time, whereas the left key is used to travel backwards. Thus, for example starting at box **98**, with service **1** picture and service **1** current information displayed on the TV screen selection of the right key **73***b* causes the information to change to later information for service **1** as represented by box **102**. The viewer may return to the display represented by box **98** by pressing the left key **73***a* or may advance the scheduling information to even later information for service **1** by again pressing the right key **73***b*. Likewise, starting from box **100** the viewer can cause the later information for service **2** to be displayed with the picture for service **2**, as represented by box **103**, by pressing the right key **73***b*. Similar movement through scheduling information for other services, e.g. service **999** as represented by boxes **101** and **104**, is, of course, also possible.

[**0070**] **FIG. 8** of the accompanying drawings shows the scan feature in greater detail. It will be noted that the left hand column of boxes correspond to the boxes **98** to **101** representing the surf feature in **FIG. 7**. Starting at box **98** with service **1** picture and service **1** current information displayed on the TV screen, selection of an appropriate key of the remote control unit, e.g. the information key **69** or another dedicated scan key (not shown). Selection of the information key **69** with the information shown in **FIG. 6** displayed on the TV screen causes the processor to enter the scan function. An appropriate device representing the scan function may be displayed on the screen if so desired. Selecting the information key **69** again while in the scan function causes exit from the scan function to the normal TV screen represented by box **99**.

[**0071**] While in the scan mode or function, selecting the left and right keys **73***a*, **73***b* changes the displayed information to earlier or later information for the service currently selected, whereas selecting the up and down keys **72***a*, **72***b* changes the service for which information is displayed. At all times in the scan mode the video for the service displayed when the scan mode was entered (i.e. service **1** picture) remains displayed on the TV screen.

[**0072**] Thus, for example, starting from box **98** and selecting the information key **69** followed by the right key **73***b* causes the TV to continue displaying the picture for service **1** and changes the information to information for service **1**, as represented by box **105**. From box **105**, selecting the up key **72***a* causes the TV to display the picture for service **1** together with later information for service **2** as represented by the box **106**. If the up key **72***a* is again depressed the information will change to later information for service **3** (not shown). If, however, starting from box **105** the right hand key **73***b* is depressed the information displayed will change to even later information for service **1** while the picture for service **1** will continue to be displayed, as represented by box **107**. Starting from box **107** and selecting the up key **72***a* will result in the processor causing the TV to display service **2** even later information together with the service **1** picture as represented by box **108**.

[**0073**] In other words, while in scan mode selection of the left and right keys causes the displayed information to move through time and selection of the up and down keys causes the displayed information to move through services. At all times the picture for the service received when the scan mode was entered (i.e. service **1**) will remain displayed on the TV screen.

[**0074**] A similar logical flow can be developed from other starting points, e.g. box **100** or box **101**. The scan mode can be entered from either the surf mode or the search mode by way of the information key **69**. If a separate dedicated key is provided in the remote control keypad, the processor may be arranged to enter the scan mode directly without first entering the surf or search modes.

[**0075**] Intelligent Electronic Programme Guide (IEPG)

[**0076**] The processor **23** in the decoder is arranged to operate in an intelligent electronic programme guide (IEPG) mode in which information relating to programme listings, pay-per-view services, and other customer and interactive services is displayable on the screen of the TV **2**. The decoder is arranged to enter the IEPG mode in response to selection of any one of the TV guide, Box Office, Customer Services or Interactive Services keys **77** to **80** of the remote control keypad **60**. Selection of the TV guide key **77** causes

the decoder initially to output data to the TV **2** representing an IEPG screen comprising two panels of options **113** and **114** as shown in **FIG. 9** of the accompanying drawings. The left-hand panel **113** contains options corresponding to the keys **77** to **80** on the remote control keypad **60** and it will be noted that the box marked "TV Guide"**115** is highlighted as depicted by the double lines surrounding the "TV Guide" legend. In practice the box **115** would be highlighted for example by changing the shape and/or size of the box, increasing the brightness of the box, and/or changing the colour of the box. In the event that the viewer selected one of the other buttons **78** to **80**, then the corresponding one of the other boxes **116** to **118** would instead be initially highlighted. The boxes **115** to **118** serve as a reminder to the viewer that these facilities are available for selection. The viewer can move between the boxes by manipulating the keys **77** to **80** on the keypad **60** or the up and down keys **72***a*, **72***b*.

[**0077**] The right-hand panel **114** identifies options available for the IEPG facility highlighted in the left hand panel **113**. Thus, for example when the "TV Guide" box **115** is highlighted in the left hand panel, the right hand panel will identify the type of programme listings available in the TV guide.

[**0078**] TV Guide

[**0079**] Programmes can be listed by category, for example time **115**, title **116**, movies **117**, sports **118**, childrens **119**, factual **120**, soaps **121** or hot shows **122**. Additionally, a listing of programmes entered into a custom channel **123** (to be described hereinbelow) can be displayed. With the TV guide selected, the viewer may scroll through the available options in the panel **114** by way of the up and down keys **72***a*, **72***b* of the remote control unit and may select a listing in a desired format by operation of the select key **81**.

[**0080**] When a listing in a desired format is selected, the processor **23** causes the display to be changed to the TV Guide screen shown in **FIG. 10** of the accompanying drawings. The screen is divided into a top area **125**, a grid area **126**, and a lower area **127**.

[**0081**] The top area of the TV Guide screen contains information such as a "TV Guide" logo in, say, the top left-hand corner and the current time in, say, the top right-hand comer. A legend indicating the format selected (e.g. "listings by time") is displayed in the centre of the top area and the name of the day to which the listings relate is displayed, say, at the right-hand edge of the top area. The top area **125** also contains an event icon box **128** which displays graphical icons **129** to **132** indicating whether or not an event has subtitles (an ear icon), additional information (an "I" icon), is a pay-per-view event, is subject to parental or other restriction, and so on.

[**0082**] The grid area **126** contains several entries of the selected listing. Entries can be scrolled by way of the up and down keys **72***a*, **72***b* of the remote control **28**. The IEPG is arranged so that at any given time a selected one of the entries displayed in the grid area **126** is highlighted and the icons in the event icon box **128** relate to the highlighted entry.

[**0083**] The lower area **127** of the screen displays functions associated with the colour keys **71** of the remote control. The functions performed in responses to selection of the colour keys is determined by the IEPG software and will therefore vary between different IEPG screens. For example, if the currently displayed listing is "time" the IEPG may be arranged to respond to selection of the red key by changing the screen to the "title" listing, and to respond to viewer selection of the green key by changing the display to the "movies" listing.

[**0084**] When the "time" listing is selected the IEPG enables the viewer to access seven days of listings for all channels. When the "title" listing is selected a list of events for the next **48** hours is displayed in alphabetical order. When the "movies" listing is selected a list of movie titles is displayed in alphabetical order. Similarly, when the "sports", "childrens", "factual" and "soaps" listings are selected appropriate lists of programme titles and other information are displayed in alphabetical order on the TV screen. When the "hot shows" listing is selected a list of programmes which have been selected by the marketing department of the television service company is displayed in alphabetical order on the screen. Such shows may include first screenings, special events and the like that the marketing departments wish to promote.

[**0085**] The programme information for the listings is carried in a separate IEPG channel and can therefore be quite detailed. The displayed listing will include information about the day on which the programme is being shown, the time at which it starts and the time at which it finishes.

[**0086**] Programme Mosaic

[**0087**] In addition to displaying lists of television programmes available on several channels the processor is arranged to display a mosaic of promotional video clips simultaneously on the screen of the TV **2**. The high bandwidths made available using digital techniques make it both possible and cost effective to use a single channel as a promotional channels. It is envisaged that the promotional channel would only be accessible by way of the IEPG to enable viewers to inspect forthcoming promotions and to select for viewing programmes advertised in the IEPG promotional channel.

[**0088**] **FIG. 11** of the accompanying drawings shows an example of a mosaic display comprising sixteen different promotional video clips running in a respective cell A to P. Each of the promotional video clips is of relatively short duration (say 2 to 3 minutes) and is run in a continuous cycle. The clips are combined in the mosaic form by the TV service company before transmission, and the whole mosaic is transmitted as video data representing a single picture in a single channel. Data identifying the events being promoted in each cell is transmitted with the video data for use by the processor **23** in the decoder. When the mosaic is first displayed one of the cells, e.g. cell F, is highlighted. The processor **23** is arranged to respond to viewer manipulation of the up and down, and left and right keys **72***a*, **72***b* and **73***a*, **73***b* of the remote control **28** by changing the highlighted cell. In this way, the viewer is able to navigate about the screen to enable a cell to be selected.

[**0089**] Cell selection is by way of the select key **81**. The processor **23** is arranged to respond to manipulation of the select key for example in one of three ways. One way in which the processor **23** may respond is by tuning the receiver directly to the selected programme so that the

viewer may view the programme immediately. Another way in which the processor **23** may respond is by adding details of the selected programme to the custom channel (to be described in greater detail hereinafter). Another way in which the processor may respond is by changing the display to the Box Office format shown in **FIG. 12** of the accompanying drawings. That is to say, the processor **23** can be arranged so that the programme mosaic provides a route into the Box Office facility which will now be described.

[**0090**] Box Office (Pay-Per-View)

[**0091**] The Box Office facility may be accessed in several different ways. One way, as has already been mentioned herein, is for the viewer to select a cell from the promotional programme mosaic. Another way into the Box Office facility is for the viewer to select a pay-per-view programme from the TV guide.

[**0092**] The main route into the Box Office facility is via the IEPG initial screen shown in **FIG. 9** of the accompanying drawings. With the IEPG initial screen displayed on the screen of the TV **2**, viewer manipulation either of the box office key **78** or the up, down, left and right keys **72***a* and b, **73***a* and b together with select key **81** of the remote control unit **28** causes the processor **23** to output for display data in the Box Office format shown in **FIG. 12**. The format of the Box Office screen, and indeed the format of other screens described herein, is defined by the aforementioned template data. The template data may be predefined in memory or downloaded to the decoder in signals received via the satellite dish antenna **4**.

[**0093**] The box office screen **139** is divided into three areas. The top left hand quadrant **140** contains a moving promotional video. In the interest of bandwidth economy it is preferred that the promotional video is derived from the promotional video in an IEPG mosaic channel. This is achieved by the processor **23** increasing the size of the video clip from the IEPG mosaic channel from 1/16 screen size to ¼ screen size by way of pixel replication, interpolation, etc. Of course, a separate IEPG channel containing only four ¼ size videos could instead be utilized with a suitable number of channels being employed to cover all desired pay-per-view events, although this is more wasteful of bandwidth. The top right hand quadrant **141** contains useful information such as the time and date and the television service logo.

[**0094**] As has previously been mentioned, each promotional video clip has associated with it data defining such information as the title of the programme and the time or times when the programme is to be broadcast. The processor uses the received information data together with the template data to generate a title and an event listing which are both displayed in the lower half **142** of the box office screen. Additional information such as special messages or discount information may also be associated with the promotional video clip. This additional information may be displayed in the right hand quadrant **141** or the lower half **142** of the box office screen, as desired.

[**0095**] In general the lower half **142** of the screen will display, in addition to the title and start time (including both time of day and day) of the next showing, information including at least some of the following. Some programmes, especially movies, are shown more than once. The additional information will include the frequency of showing if a programme is to be shown more than once. The rating of movies will also be shown. The price of viewing the programme will be shown in local currency. An "I" symbol will be displayed if an extended description of the programme is available. Finally, an ordering message such as "Press SELECT to order now" will be displayed in the lower half **142** of the Box Office screen.

[**0096**] As with previously described screens, the processor **23** is arranged to respond to manipulation of the up and down, and left and right keys of the remote control unit **28** by moving a highlight, or other suitable marker such as a cursor, around the Box Office screen.

[**0097**] In the event that the viewer presses the select key on the remote control unit **28**, the processor **23** will respond by outputting for display data representing a box office ordering screen. The ordering screen is also displayed if the Box Office facility is entered either from the promotional mosaic or from the TV Guide. The purpose of the ordering screen is to enable the viewer to specify in detail the exact programme that he wishes to order. The ordering screen therefore includes such information as the title of the programme, the start time of the programme, or in the case of a movie the next showing of the movie, and the price of the programme. For movies additional information regarding the rating and the frequency of showing will also be shown. If a discount is to be made available for viewing at certain times that too will be shown. When there is more than one showing of a programme, legends will be displayed for the time of each showing and the viewer will be able to select the desired showing by way of the up, down, left and right keys **72***a*, **72***b*, **73***a*, **73***b* of the remote control unit **28**.

[**0098**] The decoder may include a PIN (Personal Identification Number) facility to prevent unauthorised ordering of programmes, for example, or the ordering of adult rated movies by minors. If a PIN facility is included, the ordering screen will include a portion with which the viewer must interact to enter the PIN number via the remote control unit **28** before the order can be placed.

[**0099**] Once the viewer is satisfied with the order defined in the order screen displayed on the TV **2**, the viewer may confirm the order by pressing the select key **81** of the remote control unit. The processor **23** is arranged to respond to the select command signal from the remote control unit by outputting data defining a confirmation screen for display on the TV **2**. The confirmation screen contains the same information as the ordering screen together with a message such as "For Final Confirmation Press SELECT". If any time the viewer wishes to back out of an order or change an order to a different programme instead, pressing the back up key **70** will cause the processor **23** to return to displaying of the previous screen. The viewer pressing the select key **81** of the remote control unit causes the processor **23** to respond by entering an order placing routine.

[**0100**] If the decoder **3** is connected to a telephone line via the modem **7**, the processor **23** will send data via the modem **7** to the TV service company placing the order for the viewer. The processor **23** is arranged to wait for confirmation that the order has been accepted, or otherwise, before controlling the modem to hang up. If the order has been accepted the processor will output a confirmatory message for display on the TV screen. If the order is not accepted the

processor will instead output for display appropriate instructions to the viewer, such as "Please contact the TV service company".

[0101] Where the decoder does not include a modem or where connection cannot be made via the modem the processor will output for display suitable instructions to the viewer advising the viewer how to place the order by telephone.

[0102] The CD-ROM drive **25***a* can optionally be utilized in order to save bandwidth. Use of the CD-ROM drive **25***a* makes it possible for TV service companies to send some data direct to viewers via a compact disc (CD) for insertion into the CD-ROM drive **25***a*. The CD may contain template data and other similar data associated with the routine operation of the processor **23**. The CD may also contain data defining a whole month (say) of listings for all services broadcast by the same company, and may even contain data defining the promotional video clips used in the mosaic display and the Box Office display. Non-changing information such as the title of a programme may be delivered to the customer with the video clip data on CD, and changing information such as future showing times may be included in the signals transmitted via satellite.

[0103] Alternatively, or additionally, the modem can be utilized in the transfer of data to viewers. A command signal may be transmitted via the satellite instructing the processor **23** to cause a message to be displayed immediately or when the decoder is next switched on. The message would instruct the viewer to connect the modem to a specified number at a specified time for the downloading of new data. Of course, the processor **23** can be arranged to bypass the viewer entirely by responding to a suitable command signal by causing the modem to connect to the specified number. The approach used to download new or updating data is simply a matter of viewer and service company preference.

[0104] Custom Channel

[0105] The information carried in each channel includes data for the processor **23** to enable the decoder **3** to be programmed to switch at appropriate times to events selected by the viewer. The processor **23** is therefore able to create under viewer control a so-called custom channel comprising a sequence of programmes or events selected in advance by the viewer from the displayed TV guide from the Mosaic or Box Office displays or by surfing and searching the brief scheduling information stored in RAM. In other words, the custom channel is a virtual channel programmed by the viewer in accordance with his or her planned viewing schedule.

[0106] Data defining the custom channel is held in a look up table in the RAM **26**. When the viewer selects a programme by pressing the select button **81** of the remote control unit a prompt is displayed asking the viewer to confirm that the programme is to be entered onto the custom channel for future viewing. The viewer confirms the selection by pressing the select key **81** again.

[0107] The titles and other details of programmes in the custom channel can be viewed at any time by selecting the "custom channel" option from the TV listings display shown in **FIG. 6** of the accompanying drawings. Should there be a clash of programmes selected for the custom channel, the viewer is presented with a prompt screen identifying the clash and providing alternative options. The presentation of programme details on the custom channel is displayed a day at a time in time order. The processor **23** is arranged to respond to selection of the up and down keys **72***a*, **72***b* by moving through time on the day displayed and to respond to selection of the left and right keys **73***a*, **73***b* by changing the displayed information to previous or subsequent days.

[0108] If the custom channel has no events added to it by the viewer then it remains inactive. However, once events have been added to the custom channel by the viewer, operation of the decoder depends on the custom channel. The processor **23** is arranged so that when an event in the custom channel is one minute away from starting a prompt message is output for display on the TV screen reminding the viewer that the event previously selected is about to start. The prompt also asks the viewer for confirmation that he or she still wishes to tune to the event when it is scheduled to start. If the viewer presses the select key **81** of the remote control unit the decoder will remain tuned to the current service until the scheduled start time of the custom channel event, at which time the decoder will tune to that event. If the viewer presses the backup key **70** on the remote control, the prompt will be removed from the display and the decoder will remain tuned to the currently viewed service. The event will not, however, be removed from the custom channel listing. Consequently, should the viewer choose simply to extend the viewing of the currently viewed event, he can return to the preprogrammed event at a later time simply by entering the custom channel, for example via the TV guide listing screen shown in **FIG. 6**. If no key is pressed within a predetermined period of time, the prompt is removed from the display. All entries in the custom channel are automatically deleted from the RAM once the events have finished.

[0109] A programme may be related in some way to other programmes to be transmitted at different times and/or on different channels by the same TV service company. Obviously, programmes in daily or weekly serials are related to each other. Other relationships are less obvious. For example, a TV service company may wish to run a season of James Bond movies over a number of different channels with each movies being shown one or more times. Broadcasting in the digital domain makes it easy to include in the data for the showings of each movie further data linking that movie to other movies in the season. The processor **23** is arranged to respond to such linking data by displaying prompts when the viewer selects one movie for the custom channel. The prompts alert the viewer to other movies in the season and ask the viewer whether he/she wishes any of the other movies to be included in the custom channel. Interaction between the viewer and the IEPG then proceeds in a similar manner to that already discussed hereinabove to allow the viewer to add some or all of the linked programmes to the custom channel as desired.

[0110] Customer Services

[0111] The provision of a smart card enables every decoder to be uniquely identified. In view of the large data carrying capacity of compressed digital signals it is therefore possible for a TV service company to transmit personal messages to individual subscribers. In a conventional e-mail system receipt of a message depends on the destination being connected to a telephone line. Transmitting e-mail type messages to satellite decoders with smart cards does not

suffer from this weakness. Unless a supply of power is physically removed from a decoder, the decoder will not normally be switched off. Decoders are designed to enter a stand-by mode when they are switched "off" by the viewer. In the standby mode a decoder can still receive signals via the satellite dish antenna.

[0112] When the user switches "off" the decoder **3**, the processor **23** enters a stand-by mode in which the information data context of received signals is monitored for general updating control and programme scheduling data and also for message data specifically for the decoder **23** as determined by the identity data in the smart card **16**a. In this way, a simple and inexpensive e-mail type message broadcasting system may be realised. The inclusion of the modem **32** within the decoder means that communication from the viewer back to the TV service company is also possible.

[0113] Interactive Services

[0114] The provision of the modem **32** within the decoder **3** also makes viewer interactive services possible. One application of this is to allow viewers to vote on the progress of a game show by pressing keys of the remote control unit **28**. In the interactive mode the processor **23** is arranged to respond to signals from the remote control unit by transmitting appropriate data to a central polling station via the modem **32**. Data representing instructions on how to interact with the game (i.e. which keys to press on the remote control unit) and commands to the processor **23** are transmitted as information data with the video data. The information data is decoded by the processor **23** which reacts as appropriate to the commands (i.e. connecting the modem to a telephone number if the viewer wishes to participate in the game) and also outputs the game instructions for display with the game programme on the screen of the TV **2**.

[0115] The modem **32** also makes it possible for a viewer to interact with on-line services such as banking, insurance and mail order. It is envisaged that a channel similar to the above-discussed mosaic channel would carry promotional video and other promotional information for several companies offering an on-line service. The processor **23** can be arranged to enable the viewer to select a service from a service mosaic display screen in much the same way as programmes can be selected the promotional mosaic display screen shown in **FIG. 11** of the drawings. Viewer selection of a service would result in the processor **23** establishing connection with the service via the modem **32**.

[0116] It can take tens of seconds for a modem to establish connection. The processor is arranged to display the promotional video for the selected service together with additional information relating to the service on, say, a screen similar to the box office screen shown in **FIG. 12** while the modem connection is being made. Such a display entertains the viewer while the modem connection is being established and is replaced with a more appropriate screen for interaction with the service once the connection has been made.

[0117] It will be appreciated by those possessed of the appropriate skills and knowledge that the invention is not limited to television signals transmitted via satellite or cable. The invention can be applied equally to any system for receiving digital television signals including the digital signal systems currently under investigation by terrestrial broadcasters in the UK and elsewhere.

[0118] Having thus described the present invention by reference to a preferred embodiment it is to be well understood that the embodiment in question is exemplary only and that modifications and variations such as will occur to those possessed of appropriate knowledge and skills may be made without departure from the spirit and scope of the invention as set forth in the appended claims and equivalents thereof.

**1**. A receiver for receiving a television signal comprising video data defining a video picture and information data defining information relating to user selectable services, the receiver being arranged to produce output signals defining an image representing available services for display on a television screen, the receiver comprising a user operable selector operable to select a displayed service and a modem responsive to such user selection for establishing a connection via a telephone line to a provider of the selected service.

**2**. A receiver as claimed in claim 1, wherein output signals are produced from received video data for display of the video picture represented thereby on a television screen while the connection is established by the modem.

* * * * *