June 21, 1949. K. J. STIEFEL 2,473,617

ELECTRICAL CONTROL SYSTEM

Filed Oct. 27, 1944 2 Sheets-Sheet 1

FIG. 1.

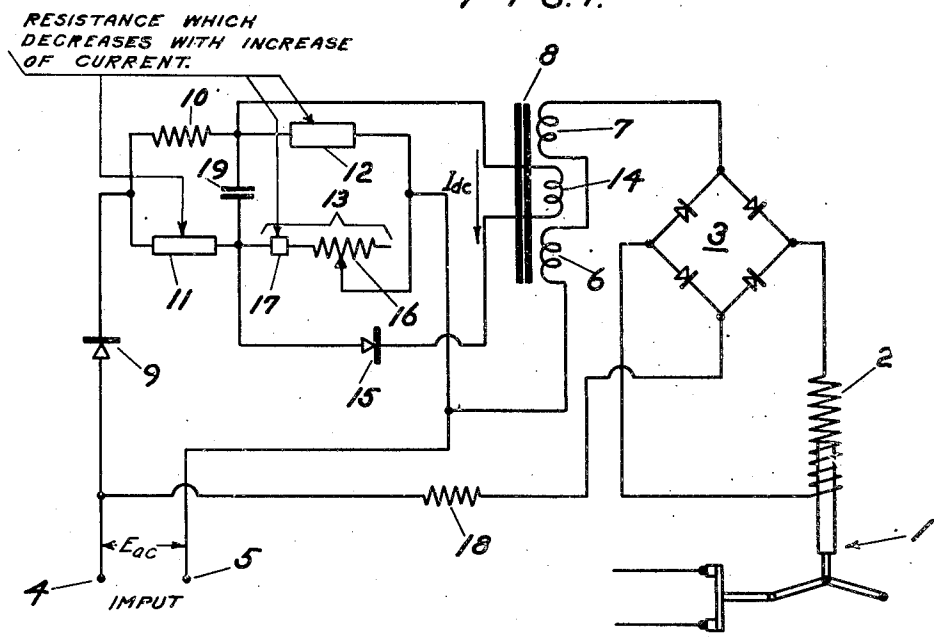

FIG. 2.

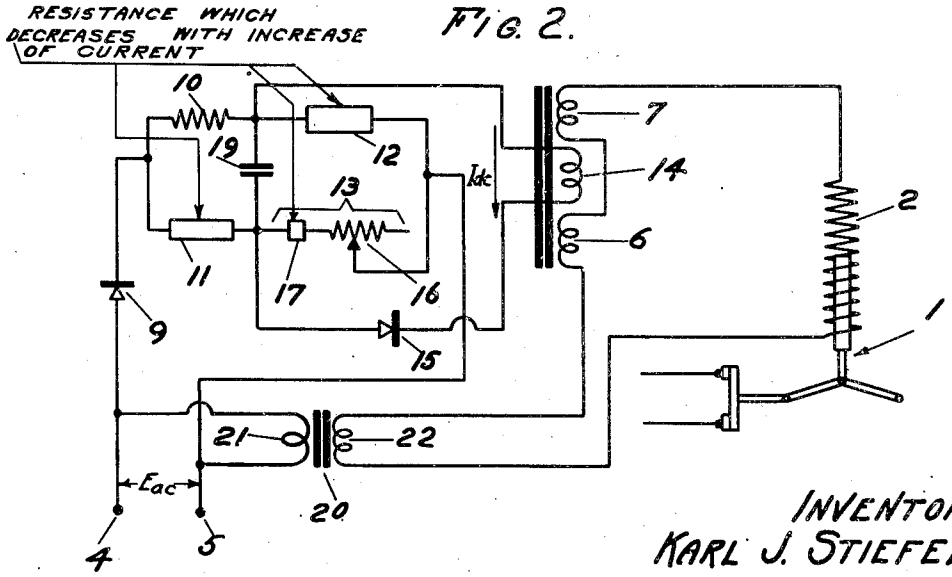

INVENTOR.
KARL J. STIEFEL,
BY Elmer J. Gorn
ATTY.

June 21, 1949. K. J. STIEFEL 2,473,617

ELECTRICAL CONTROL SYSTEM

Filed Oct. 27, 1944 2 Sheets-Sheet 2

FIG. 3.

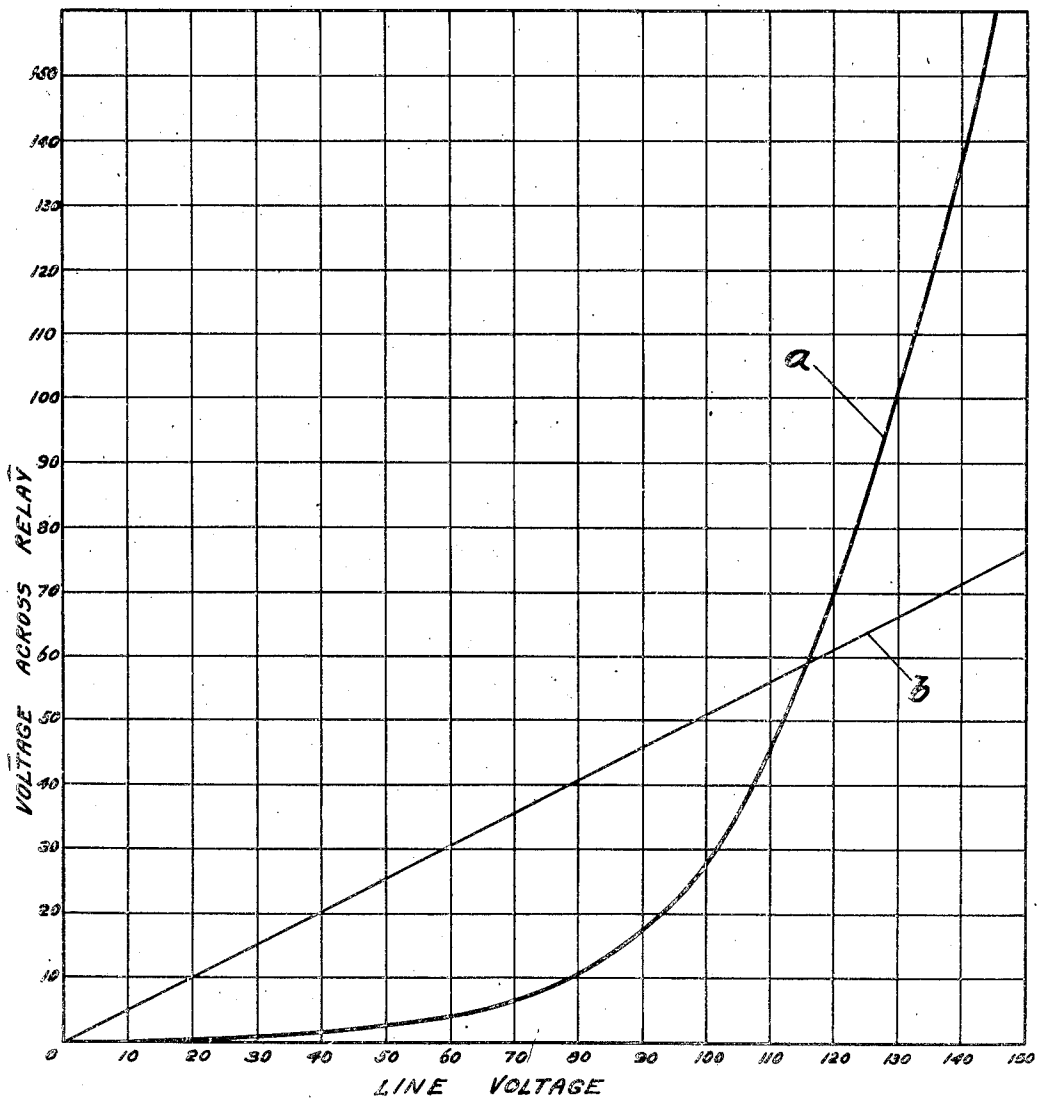

INVENTOR.
KARL J. STIEFEL,
BY Elmer J. Gorn ATTY.

Patented June 21, 1949 2,473,617

UNITED STATES PATENT OFFICE

2,473,617

ELECTRICAL CONTROL SYSTEM

Karl J. Stiefel, Waltham, Mass., assignor to Raytheon Manufacturing Company, Newton, Mass., a corporation of Delaware

Application October 27, 1944, Serial No. 560,650

2 Claims. (Cl. 175—294)

1

This invention relates to electrical control systems, and more particularly to an over-voltage control system for opening a circuit when the current therethrough exceeds a predetermined value.

Systems of the type to which the invention relates have heretofore been unreliable under conditions involving shock and vibration or when subjected to large changes in the ambient temperature. When all of these conditions are present, such systems become highly unreliable. In my copending application, Serial No. 556,446, filed September 29, 1944, there is disclosed a system which overcomes these defects of the prior art so that, when the relay is subjected to shock or vibration, the same will not be snapped into open position when the current through the actuating solenoid thereof is far below the value of the current at which the relay would normally function. The present invention contemplates a system which, while effecting the functions of the system of the copending application, provides a relay system having a still greater sensitivity to changes in the input voltage at the desired cut-off value thereof.

The above and other objects and features of the invention will be made fully apparent to those skilled in the art from a consideration of the following detailed description, taken in conjunction with the accompanying drawings in which:

Fig. 1 is a circuit diagram of a system embodying my invention;

Fig. 2 is a circuit diagram of a further embodiment of the invention; and

Fig. 3 is a curve illustrating certain operating characteristics of the invention.

Referring to the drawings, the solenoid 2 of a relay 1 is supplied with current from a bridge rectifier 3. The rectifier 3 is supplied with alternating current from a circuit connected across the terminals 4 and 5 of a suitable source of supply. In this circuit and in series with the bridge rectifier circuit are the coils 6 and 7 of a saturable reactor 8. Also connected across the terminals 4 and 5 through a rectifier 9 is a bridge circuit, including resistors 10, 11, 12 and 13, one in each of the arms of the bridge. The resistors 10 and 11 are jointly connected to one of the terminals 4 and 5 and the resistors 12 and 13 are jointly connected to the other of these terminals. The junction between the resistors 10 and 12 is connected to a coil 14 of the saturable reactor 8, and the junction between the resistors 11 and 13 is connected to the opposite end of the coil 14. A blocking rectifier 15 is included in the connections between the bridge circuit and the coil 14.

2

The resistor 10 may be of the usual type in which the resistance remains substantially constant with variations in the current therethrough, or it may be of the type in which the resistance increases with an increase in current. For example, it may be the tungsten filament of a lamp or a number of them. The resistors 11 and 12 are of a material the resistance of which rapidly decreases as the current therethrough is increased. Such resistance elements are known per se in the art and may be composed of a ceramic resistance material comprising graphite and silicon carbide, for example, "Thyrite." In such materials the resistance decreases in accordance with an exponential function of the current forced through it. It will be understood that any resistor, of the type in which the resistance decreases rapidly as the current therethrough increases, is suitable for the purposes of the present invention. Since the curve of the resistance-current characteristics of such an element has a negative slope, resistance elements of this type are commonly said to have negative resistance-current characteristics. Also where the resistance is a non-linear function of the current, the resistance element may be said to have negative non-linear resistance-current characteristics. The resistor 13 comprises a variable resistance 16 and a temperature compensating resistance element 17. The element 17 is preferably the same material as the resistors 11 and 12, but is heat-insulated to compensate for the variation of the resistance of the other elements with changes in ambient temperature.

In the operation of the circuit just described, when the alternating potential, indicated as E_{ac}, across the supply source is at a normal predetermined value, say 110 volts, the resistance of the elements 10, 11, 12 and 13 is such that the bridge circuit is balanced and no current flows through the coil 14 of the saturable reactor 8. In other words, if R_1, R_2, R_3 and R_4 denote the values of the resistance of the elements 10, 11, 12 and 13, respectively, these values are so chosen that the relation therebetween at the predetermined value of the applied potential may be expressed by the equation:

$$\frac{R_1}{R_2}=\frac{R_3}{R_4}$$

If the potential at the input source falls below this predetermined value, then the value of the resistance elements 11 and 12 is increased and the bridge circuit becomes unbalanced. However,

the bridge circuit is unbalanced in such a direction under these conditions that no current can flow through the coil 14 due to the blocking rectifier 15. When no current flows through the coil 14, the inductive reactance of the saturable reactor 8 is high and only a low current can flow through the coils 6 and 7 and hence the rectified current which is supplied to the solenoid 2 of the relay 1 is far below the value required to actuate the relay 1. When the potential E_{ac} of the source increases above the predetermined value, the resistance of the elements 11 and 12 is greatly decreased, the bridge circuit becomes unbalanced, and a current I_{dc} flows through the coil 14 in such a direction that it is not blocked by the rectifier 15. This current through the coil 14 tends to saturate the saturable reactor 8, a tendency which is increased by the increase in current through the coils 6 and 7 due to the increase in the potential of the source. As the reactor 8 becomes saturated, the impedance to the flow of current through the coils 6 and 7 is sharply decreased, and hence the rectified current supplied to the solenoid 2 of the relay 1 is sharply increased to a value at which the relay is actuated.

From the foregoing it will be seen that the voltage across the solenoid 2 increases far more rapidly than the corresponding increase in the line voltage as the predetermined cut-off voltage is approached. The relationship between the voltage across the relay and the line voltage in one successful application of the invention is shown by the curve *a* of Fig. 3, in which the ordinates represent the voltage across the relay, which in this case has a resistance of 1000 ohms, and the abscissas represent the line or input voltage. In this case the desired cut-off value of the input voltage was 115 volts. It will be seen that as the line voltage increases to this value from 110 volts, the voltage across the relay increases from about 45 to nearly 60 volts. When the system of the present invention is not used and the relay is connected across the line through the usual current-limiting resistance, the voltage across the relay varies linearly with variations in the line voltage, the relation therebetween being that of the curve *b*. It will be seen that without the system of the present invention, the approach to the desired cut-off value is much more gradual so that, even though the line voltage is substantially below the predetermined cut-off value of about 115 volts, the voltage across the relay is almost sufficient to actuate the same. Under these conditions, factors independent of the line voltage, such as slight shocks or vibrations to which the relay may be subjected, may cause the relay to be jolted into open position. Also, small differences in the force required to actuate the relay arising in the mechanical parts of the same may cause it to be actuated over a substantial range of line voltages instead of within a relatively limited range of voltages close to a desired predetermined voltage. For example, if any part of the switch mechanism tends to stick slightly, the voltage across the line must be materially above the desired cut-off voltage before the switch is opened. In the case of the present invention, if the mechanical parts of the switch tend to stick slightly, then a very small increase in the line voltage over the predetermined cut-off value results in a large increase in the voltage across the relay, so that the same is nevertheless actuated, while the line voltage is still close to the desired cut-off value.

While, in the embodiment of the invention shown in Fig. 1, the relay is supplied with a direct current from a suitable rectifier 3 in series with the coils 6 and 7 of the saturable reactor 8, it will be understood that when the relay is of the type suitable for operation on alternating current, the solenoid 2 of the relay 1 may be directly connected in the circuit without the interposition of such a rectifier. Also, in the form shown in Fig. 1, the relay circuit is connected directly across the input terminals 4 and 5. In some instances it is desirable to provide a transformer between the supply line and the relay, as shown in Fig. 2. Referring to this figure, in which corresponding elements of the system of Fig. 1 are similarly numbered, current is supplied to the relay circuit from a transformer 20 having a primary winding 21 connected across the input terminals 4 and 5, and a secondary winding 22. The number of turns of the secondary winding may bear any desired step-up relation to the number of turns of the primary winding. In this figure the relay 1 is directly connected in the circuit, and it will be understood that it might also be connected through a rectifier in the manner shown in Fig. 1.

While there have been herein described exemplary embodiments of the invention, other embodiments within the scope of the appended claims will be apparent to those skilled in the art from a consideration of the embodiments shown and the teachings hereof. Accordingly a broad interpretation of the appended claims commensurate with the scope of the invention within the art is desired.

What is claimed is:

1. In combination, a saturable reactor having a saturable magnetic core, a main winding on said core and adapted to be connected to a source of alternating current, a control winding on said core, a bridge circuit for supplying saturating direct current to said control winding in response to a predetermined condition, said bridge circuit having four arms each including a resistor, two of said resistors in diametrically opposite arms having negative resistance current characteristics, another of said resistors having a substantially constant resistance current characteristic, and the fourth resistor having a small component of negative resistance current characteristic and a large component having substantially constant resistance current characteristic, said resistors being arranged to unbalance said bridge circuit when the current therethrough differs from a predetermined value, and an electromagnetic relay having an operating coil connected in series with said main winding, whereby said relay is operated in response to the flow of saturating direct current through said control winding.

2. In combination, a saturable reactor having a saturable magnetic core, a main winding on said core and adapted to be connected to a source of alternating current, a control winding on said core, a bridge circuit for supplying saturating direct current to said control winding in response to a predetermined condition, said bridge circuit having four arms each including a resistor, two of said resistors having negative resistance current characteristics, another of said resistors having a substantially constant resistance current characteristic, and the fourth resistor having a small component having negative resistance current characteristic, and a large component having substantially constant resistance current characteristic, said resistors being arranged to unbalance said bridge circuit when the current therethrough differs from a predetermined value,

a rectifier in series with said control winding whereby said control winding will be energized by unbalance of said bridge in one direction only, an electromagnetic relay having a direct current operating coil connected in series with said main winding, and a rectifier also connected in series with said main winding, whereby said relay is operated in response to the flow of saturating direct current through said control winding.

KARL J. STIEFEL.

REFERENCES CITED

The following references are of record in the file of this patent:

UNITED STATES PATENTS

Number	Name	Date
1,210,058	Fortesque	Dec. 26, 1916
1,276,589	Steinmez	Aug. 20, 1916
1,715,684	Thomas	June 4, 1929
1,871,822	Ollendorff et al.	Aug. 16, 1932
1,885,908	Gilson	Nov. 1, 1932
1,907,559	Nickle	May 9, 1933
1,948,372	Fitz Gerald	Feb. 20, 1934
2,067,143	Logan	Jan. 5, 1937
2,085,387	Merrill	June 8, 1937
2,112,098	Johnson	Mar. 22, 1938
2,244,058	Crofford	June 3, 1941
2,377,506	McWhirter et al.	June 5, 1945
2,399,266	Stiefel	Apr. 30, 1946