AU9656587

(12) PATENT ABRIDGMENT (11) Document No. AU-B-56587/96
(19) AUSTRALIAN PATENT OFFICE (10) Acceptance No. 696290

(54) Title
PRINTING APPARATUS FOR CONTAINERS OF CIRCULAR CROSS SECTION

International Patent Classification(s)
(51)[6] **B41F 017/18**

(21) Application No. : **56587/96** (22) Application Date : **08.05.96**

(87) PCT Publication Number : **WO96/35580**

(30) Priority Data

(31) Number	(32) Date	(33) Country
7-110803	**09.05.95**	**JP JAPAN**

(43) Publication Date : **29.11.96**

(44) Publication Date of Accepted Application : **03.09.98**

(71) Applicant(s)
KABUSHIKI KAISHA YAKULT HONSHA

(72) Inventor(s)
SHINICHIRO NO; SHINICHIRO WATANABE

(74) Attorney or Agent
DAVIES COLLISON CAVE , GPO Box 3876, SYDNEY NSW 2001

(56) Prior Art Documents
JP 63-37707
JP 50-4017

(57) Claim

1. A printing apparatus for a container that has a circular cross section to print by transferring ink on a circular cross sectional cylindrical container having a constricted portion inward along the radius, said printing apparatus comprising

imprint rolls for each portion having a different radially length on the circular sectional container,

said imprint rolls being arranged in a way that the imprint roll for printing a portion having the largest radial section of said container among portions to be printed is first placed at an upstream point along a rotational direction of a transfer drum, then other rolls are placed from next to the first roll in decreasing order in length of the radius of the corresponding portion to be printed by the roll,

said transfer drum having a fixed transfer surface member and a movable transfer surface member, and

said movable transfer surface member being resiliently biased along a direction of protrusion by a resilient means.

2. A printing apparatus for printing a container having a circular cross section to transfer ink on a cylindrical container which has a shoulder portion and a circular sectional constricted portion recessed from the surface of said shoulder portion and a barrel portion having the

.../2

same length of diameter as said shoulder portions, said printing apparatus comprising:

a transfer drum having a fixed transfer surface member for said shoulder portion, a ring-shaped groove, a plurality of movable transfer surface members being arranged in a reciprocal manner with reference to said groove and being biased along a direction of protrusion, and a fixed transfer surface member for a barrel portion;

a cleaning roll and first imprint roll, which are arranged along one side of said transfer drum in a rotatable manner and make contact in pressure with said fixed transfer surface member for the shoulder portion, said fixed transfer surface member for the barrel member and said movable transfer surface member;

a second imprint roll contacting in pressure with said movable transfer surface member;

an arc-shaped guide being arranged around another side of said transfer drum with a clearance from said transfer drum;

a timing screw; and

a guide rail.

OPI DATE 29/11/96 APPLN. ID 56587/96
AOJP DATE 23/01/97 PCT NUMBER PCT/JP96/01214
AU9656587

(51) 国際特許分類6
B41F 17/18

A1

(11) 国際公開番号 WO96/35580

(43) 国際公開日 1996年11月14日(14.11.96)

(21) 国際出願番号 PCT/JP96/01214
(22) 国際出願日 1996年5月8日(08.05.96)

(30) 優先権データ
特願平7/110803 1995年5月9日(09.05.95) JP

(71) 出願人（米国を除くすべての指定国について）
株式会社 ヤクルト本社
(KABUSHIKI KAISHA YAKULT HONSHA)[JP/JP]
〒105 東京都港区東新橋1丁目1番19号 Tokyo, (JP)
(72) 発明者；および
(75) 発明者／出願人（米国についてのみ）
野慎一郎(NO, Shinichiro)[JP/JP]
〒105 東京都港区東新橋1丁目1番19号
株式会社 ヤクルト本社内 Tokyo, (JP)
渡辺新一郎(WATANABE, Shinichiro)[JP/JP]
〒113 東京都文京区千駄木3-10-20 Tokyo, (JP)
(74) 代理人
弁理士 高橋敏忠, 外(TAKAHASHI, Toshitada et al.)
〒105 東京都港区西新橋二丁目13番3号 藤喜ビル Tokyo, (JP)

(81) 指定国
AU, BR, CN, KR, US, 欧州特許(AT, BE, CH, DE, DK, ES, FI, FR, GB, GR, IE, IT, LU, MC, NL, PT, SE).

添付公開書類 国際調査報告書

(54) **Title** : PRINTING APPARATUS FOR CONTAINERS OF CIRCULAR CROSS SECTION

(54) 発明の名称 円形断面容器の印刷装置

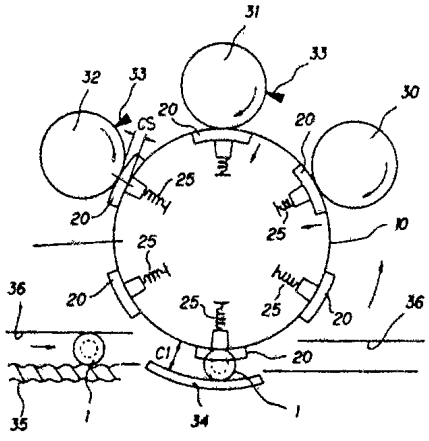

(57) **Abstract**

The invention has its object to effect simultaneous multi-color printing on a container having drum sections recessed from a drum portion by means of a simple construction. To attain such object, according to the invention, a timing screw (35) conveys containers (1), a transfer drum (10) is rotated, a first marking roll (31) transfers ink to stationary shoulder transfer surface portions (11) and stationary drum transfer surface portions (13), a second marking roll transfers ink to movable transfer surface portions (20), and after ink is transferred to shoulder portions (4), drum portion (6) and a neck portion (5) of a container (1) held between a guide (34) and the transfer roll (10) and moved in rotation and printing is performed, a cleaning roll (30) removes the remaining ink on the stationary shoulder transfer surface portions (11), stationary drum transfer surface portions (13) and the movable transfer surface portions (20).

(57) 要約

本発明の目的は、簡単な構造で胴部に対し引込んだ胴部を有する容器に同時に多色印刷することである。

その様な目的を達成するため、本発明によれば、タイミングスクリュー（35）で容器（1）を搬送すると共に転写ドラム（10）を回転し、第1刻印ロール（31）で肩部固定転写面部（11）及び胴部固定転写面部（13）にインクを転写し、第2刻印ロールで可動転写面部（20）にインクを転写し、ガイド（34）と転写ロール（10）とに挟持され回転移動する容器（1）の肩部（4）、胴部（6）及びくびれ部（5）にインクを転写して印刷したのち、クリーニングロール（30）で肩部固定転写面部（11）、胴部固定転写面部（13）及び可動転写面部（20）の残余インクを除去している。

情報としての用途のみ
PCTに基づいて公開される国際出願をパンフレット第一頁にPCT加盟国を同定するために使用されるコード

AL アルバニア
AM アルメニア
AT オーストリア
AU オーストラリア
AZ アゼルバイジャン
BA ボスニア・ヘルツェゴビナ
BB バルバドス
BE ベルギー
BF ブルキナ・ファソ
BG ブルガリア
BJ ベナン
BR ブラジル
BY ベラルーシ
CA カナダ
CF 中央アフリカ共和国
CG コンゴ
CH スイス
CI コート・ジボアール
CM カメルーン
CN 中国
CU キューバ
CZ チェッコ共和国
DE ドイツ
DK デンマーク
EE エストニア
ES スペイン
FI フィンランド
FR フランス
GA ガボン
GB イギリス
GE グルジア
GH ガーナ
GN ギニア
GR ギリシア
HU ハンガリー
IE アイルランド
IL イスラエル
IS アイスランド
IT イタリア
JP 日本
KE ケニア
KG キルギスタン
KP 朝鮮民主主義人民共和国
KR 大韓民国
KZ カザフスタン
LC セントルシア
LI リヒテンシュタイン
LK スリランカ
LR リベリア
LS レソト
LT リトアニア
LU ルクセンブルグ
LV ラトヴィア
MC モナコ
MD モルドヴァ共和国
MG マダガスカル
ML マリ
MN モンゴル
MR モーリタニア
MW マラウイ
MX メキシコ
NE ニジェール
NL オランダ
NO ノールウェー
NZ ニュージーランド
PL ポーランド
PT ポルトガル
RO ルーマニア
RU ロシア連邦
SD スーダン
SE スウェーデン
SG シンガポール
SI スロヴェニア
SK スロヴァキア
SN セネガル
SU ソビエト連邦
TD チャド
TG トーゴ
TJ タジキスタン
TM トルクメニスタン
TR トルコ
TT トリニダード・トバゴ
UA ウクライナ
UG ウガンダ
US アメリカ合衆国
UZ ウズベキスタン
VN ヴィエトナム

PRINTING APPARATUS FOR CIRCULAR SECTIONAL CONTAINER

The present invention relates to a printing apparatus for container having a circular cross section. The printing apparatus comprises transferring ink on a cylindrical container having a constricted portion, particularly a cylindrical container having a shoulder portion, a circular sectional constricted portion having a shorter radius than the radius of the should portion and a barrel portion having the same diameter as the shoulder portion.

The present applicant discloses in the Japanese Patent Application Publication No. 63-37707 a technique relating to simultaneously print in multiple colours as shown in Fig. 6 on a shoulder portion 4, a constricted portion 5 and a barrel portion 6 of a container 1 having a cap 2, a tapered mouth portion 3, the cylindrical shoulder portion 4, the constricted portion 5 of a circular cross section, and the barrel portion 6 which has the same diameter as the diameter of the shoulder portion.

This well known technique above described is structured so that a transfer surface member for the constricted portion can be protruded from a flat surface of a transfer drum with cams and springs, but the structure is very complicated.

It is an object of the present invention to provide a simultaneous printing apparatus of a simple structure for circular cross sectional containers which simultaneously prints in multiple colours on the container having the constricted portion whose surface is recessed from the surface of the barrel portion.

According to one aspect of the present invention there is provided a printing apparatus for a container that has a circular cross section to print by transferring ink on a circular cross sectional cylindrical container having a constricted portion inward along the radius, said printing apparatus comprising imprint rolls for each portion having a different radially length on the circular sectional container, said imprint rolls being arranged in a way that the imprint roll for printing a portion having the largest radial section of said container among portions to be printed is first placed at an upstream point along a rotational direction of a transfer

AUSTRALIAN PATENT OFFICE

drum, then other rolls are placed from next to the first roll in decreasing order in length of the radius of the corresponding portion to be printed by the roll, said transfer drum having a fixed transfer surface member and a movable transfer surface member, and said movable transfer surface member being resiliently biased along a direction of protrusion by a resilient means.

According to another aspect of the present invention there is provided a printing apparatus for printing a container having a circular cross section to transfer ink on a cylindrical container which has a shoulder portion and a circular sectional constricted portion recessed from the surface of said shoulder portion and a barrel portion having the same length of diameter as said shoulder portions, said printing apparatus comprising: a transfer drum having a fixed transfer surface member for said shoulder portion, a ring-shaped groove, a plurality of movable transfer surface members being arranged in a reciprocal manner with reference to said groove and being biased along a direction of protrusion, and a fixed transfer surface member for a barrel portion; a cleaning roll and first imprint roll, which are arranged along one side of said transfer drum in a rotatable manner and make contact in pressure with said fixed transfer surface member for the shoulder portion, said fixed transfer surface member for the barrel member and said movable transfer surface member; a second imprint roll contacting in pressure with said movable transfer surface member; an arc-shaped guide being arranged around another side of said transfer drum with a clearance from said transfer drum; a timing screw; and a guide rail.

For the resilient means, it is preferable to use, for instance, a spring.

In performing the present invention when the shoulder portion, the barrel portion, and the constricted portion of the container having a circular cross section are different in each radial length, a transfer surface member for a portion of the circular sectional container having the longest radial length is treated as a fixed transfer surface member and other transfer surface members are treated as movable transfer surface members. In such cases, a protruding length for each movable surface member is adjusted by a

AUSTRALIAN PATENT OFFICE

resilient means, for instance, a spring. And the imprint rolls may be arranged in decreasing order of radius of each corresponding container portion so that ink is first transferred by an imprint roll for a transfer surface member for the container portion having the longest radial length.

It is preferable to form a protruded portion of the movable transfer surface member according to the shape of a corresponding portion of the container to be printed. Or the protruded portion is preferably shaped into a corner cut shape, a chamfered shape, a round corner shape, and a curved shape to prevent friction or interference with other portions on pressing with the imprint roll.

It is also preferable to be composed of an elastic material such as rubber for a surface portion of the fixed transfer surface member and the movable transfer surface member which contact with the container.

In a printing apparatus for a circular cross sectional container being constructed as mentioned above according to the present invention, when an imprint roll which prints an imprint for a portion of the container excepting the constricted portion on the movable transfer surface member engages an already printed movable transfer surface member, the transferred ink on the movable transfer surface member interferes and causes a disadvantage. This disadvantage may be occurred when the apparatus is structured so as to bias the transfer surface member for the constricted portion along a direction of the protrusion only by a spring, though the disadvantage can be avoided when the movable transfer surface member is engaged with the imprint roll at a spot of a predetermined imprint roll using a cam and a spring as described in a patent publication as a well known technique.

However, in the present invention, since the imprint roll for printing a portion having a long radial length is positioned at the upstream side in the rotational direction of the transfer drum, the movable transfer surface member for printing a portion having a short radial length is pressed by the imprint roll but ink is not transferred. Therefore, no disadvantage is produced for the printing.

In a case that a container has a plurality of the constricted portions, the present invention can also be applied in the same way.

The present invention can be applied to a circular cross sectional container having a shoulder portion, a constricted portion, and a barrel portion. When portions having a long radial length are the shoulder portion

AUSTRALIAN PATENT OFFICE

and the barrel portion. in practice of the printing. the container is carried by a timing screw. While rotating a transfer drum. ink is transferred on the transfer drum for the shoulder portion and the barrel portion through the first imprint roll, and the ink is then transferred only on the movable transfer surface member through the second imprint roll. At this time, the second imprint roll is positioned away from the fixed transfer surface member by a distance of protrusion, so that the second imprint roll transfers ink only on the protruded movable transfer surface member. Then inks on the fixed transfer surface member for the shoulder portion and for the barrel portion are transferred on the shoulder portion and the barrel portion of the container which is inserted between the guide member and the transfer drum and moved in rotating on the axis thereof, and at the same time the ink on the movable transfer surface member is transferred on the constricted portion of the container. Then a remaining inks of the fixed transfer surface members and the movable transfer surface member are removed by means of a cleaning roll.

As described above, in carrying out the present invention, it is also applicable for a container having different radius in length of the shoulder portion, barrel portion and the constricted portion. In such a case, the transfer surface member for a portion having the longest radial length in the circular sectional container is taken as the fixed transfer surface member and other transfer surface members are taken as the movable transfer surface members. The protrusion lengths of the movable transfer surface members are adjusted by a resilient means (for instance, a spring). And the imprint rolls may be arranged in decreasing order in radius of each corresponding container portion so that ink is first transferred by an imprint roll for a transfer surface member to print on the container portion having the longest radial length, then by a corresponding imprint roll for a portion having a second longest radial length and other rolls are in the same manner.

It is preferable for preventing friction or interference with other portion when pressed by an imprint roll to make a protruded portion of the movable transfer surface member into the same shape with a corresponding portion of the container or to remove a sharp corner so as to make a chamfered corner or a round corner.

Incidentally, there is a difference (speed difference) between the fixed transfer surface and the movable transfer surface in a circumferential

AUSTRALIAN PATENT OFFICE

velocity, caused by a difference between distances from the rotation axis to the fixed transfer surface member and to the movable transfer surface member, in other words, a difference in length in the radial direction. And in a case that the constricted portion of the container has a archery shaped cross section, the movable transfer surface member can intimately contact because of an elasticity of the material thereof. But there is a difference (speed difference) in a circumferential velocity between a top-and-bottom position and a central position of the movable transfer surface member.

These mechanical problems are all resolved by existence of a slip occurred between the container material and the transfer surface member. A distortion of a print image produced by the slip in printing can be ignored from experience when a difference between the longest radial length and the shortest radial length of the container is less than twenty percent. The quality of print has almost no problem when the distortion amount is beforehand considered and corrected in a plate-making design.

Brief Description of Drawings

Fig. 1 is a top view of an experiment of the present invention;

Fig. 2 is a fragmentary perspective view of a main part in Fig. 1;

Fig. 3 is a perspective view of a transfer member for a constricted portion;

Fig. 4 is an exploded view of Fig. 3;

Fig. 5 is a side elevational view of another experiment of a second imprint roll;

Fig. 6 is a side elevational view of an example of containers related to the present invention;

Fig. 7 is a side elevational view of still another example of containers related to the present invention;

Fig. 8 is a plane view of a main part of another experiment of the present invention; and

Fig. 9 is a fragmentary enlarged sectional view of Fig. 8.

Best Mode for Carrying out the Invention

An experiment of the present invention will now be described with reference to the attached drawings.

In Figs. 1-2, an apparatus of the present invention is comprised of a

AUSTRALIAN PATENT OFFICE

transfer drum using the designation 10 to show a total Fig., a cleaning roll 30 provided in a slidable manner, a first imprint roll 31 and a second imprint roll 32 arranged around one side of the transfer drum 10 in the above described order from an upstream along a rotational direction shown by an arrow in the Fig., and a guide 34, a timing screw 35, a guide rail 36 arranged around another side of the transfer roll 10.

On the transfer drum 10, a fixed transfer surface member 11 for printing on a shoulder portion 4 of a container 1, a ring-shaped groove 12 which carries a plurality of movable transfer surface members 20 (six members in the drawing), and a fixed transfer surface member 13 for printing on a barrel portion 6 of the container 1 are arranged in the order just described beginning from the upstream along a rotational direction of the transfer drum.

The movable transfer surface member 20 is mainly defined by a transfer member 21 and a holder 27 as shown in Figs. 3-4. The transfer member 21 is consisted of an arc-shaped transfer piece 22, a yoke 23 fixing the transfer piece 22 with screws a, an axle member 24 protruding from the yoke 23, and a holding pin 25 thrusting through the axle member 24 and intersecting therewith at right angles. The holder 27 is consisted of a main body 28 holding the axle member 24 in a slidable manner and a base member 29 fixing the main body 28 with screws b. The base member 29 is fixed on the bottom surface of the transfer drum 10 with screws c. A spring 26 is inserted between an inner hole 28a and an inner hole 24a of the axle member 24 and the transfer member 21 is biased outward along the radius of the transfer drum 10. The transfer member 21 is held along a direction of rotation and the axle by the holding pin 25.

The cleaning roll 30 is based on a well known technique.

The first imprint roll 31 is based on a well known technique and an imprint member 31a for the shoulder portion and another imprint member 31b for the barrel portion are provided on the peripheral surface thereof.

The second imprint roll 32 is based on a well known technique and has an clearance CS (almost equal to the thickness of the transfer piece 22) with the transfer drum 10 and a movable imprint member 32a is provided on the peripheral surface thereof. The imprint roll 31 and 32 are biased toward the transfer drum 10 by not shown springs having a larger force than that of the spring 26. Doctors 33, 33 based on a well known technique are arranged in making contact on the peripheries of the imprint rolls 31 and 32.

AUSTRALIAN PATENT OFFICE

The guide 34 is formed in an arc shape, coaxial with the transfer drum 10 and an clearance C1 of very small length shorter than the outer diameter of the container 1 is formed between the guide 34 and the transfer drum 10 so that the container 1 is held in the clearance C1 between the guide 34 and the rotating transfer drum 10, and moved in rotating by friction.

The timing screw 35 and the guide rail 36 are based on a well known technique.

The movable transfer surface member 20 can be vertically arranged in plural number, and both the imprint roll 32 and the cleaning roll 30 can be arranged in plural numbers.

A printing process is explained here.

The container 1 is carried by the timing screw 35 and the transfer drum 10 is concurrently rotated in the direction of the arrow. Ink on the imprint member 31a for the shoulder portion and the imprint member 31b for the barrel portion are transferred to the fixed transfer surface member for the shoulder portion 11 and the fixed transfer surface member for the barrel portion 13 from the first imprint roll 31. At this time the movable transfer surface member 20 is pressed inside the ring-shaped groove 12 of the transfer drum 10 by the pressure of the roll 31 and becomes the same surface level with the surface of the fixed transfer surface member for the shoulder portion 11 and the surface of the fixed transfer surface member for the barrel portion 13.

Ink on the second imprint member 32a is next transferred with pressure to the transfer piece 22 protruded from the transfer drum 10 by a spring 25. The ink on the transfer drums 11 and 13 are transferred to the shoulder portion 4 and the barrel portion 6 of the container 1 rotationally moved by the guide 34, and concurrently the ink on the transfer piece 22 is transferred to the constricted portion 5. Finally residual inks on the fixed transfer surface member for the shoulder portion 11, the fixed transfer surface member for the barrel portion 13 and the movable transfer surface member 20 are removed by the cleaning roll 30.

Another experiment of the second imprint roll is shown in Fig. 5. A movable imprint member 32b is formed in a vertically wide manner and a roll 32A is structured in a vertically movable manner. In the experiment, plural date portions are provided on an imprint member 32a (6 pieces in the Fig.) and the roll is moved vertically in accordance with a corresponding date and

AUSTRALIAN PATENT OFFICE

transfers the ink so that the usable period of the roll 32A is extended.

Still another experiment of the present invention is shown from Figs. 7-9.

A container 41 having a circular cross section is defined by a mouth portion 43, a shoulder portion 44, a constricted portion 45, a barrel portion 46 as shown in Fig. 7 and the radial lengths of the mouth portion, shoulder portion, barrel portion, and the constricted portion are all different. In order to print on the container 41 having an above described shape, a transfer drum 50 and other members are structured as shown in Fig. 8.

A cleaning roll 30 provided in a rotatable manner, a first imprint roll 51, a second imprint roll 52, and a third imprint roll 53 are arranged around one side of the transfer drum 50 in order from upstream of rotational direction shown with an arrow. A fixed transfer surface member to transfer ink on the barrel portion 46 of the container 41(similar structure with the fixed transfer surface member 13 for the barrel portion: not clearly shown in the Figs. 7-9), a movable transfer surface member 20a for the constricted portion 45, a movable transfer surface member 20b for a shoulder portion 44, a ring-shaped groove to carry the movable transfer surface members 20a and 20b (not clearly shown in Figs. 7-9) are arranged on the transfer drum 50.

As for a distinction between the fixed transfer surface member and the movable transfer surface members 20a, 20b, a transfer surface member to transfer on the barrel portion 46 having the longest radial length in the container 41 having a circular cross section is designated as the fixed transfer surface member and transfer surface members for other portions are de signated as the movable transfer surface members. The rolls 30, 51, 52 and 53 are arranged in decreasing order of radius from a transfer surface member corresponding to a portion having longer radial length in the circular cross sectional container 41, more specifically, the roll 51 for the barrel portion 46, the roll 52 for the constricted portion 45, and the roll 53 for the shoulder portion 53 are successively arranged for transferring ink. The protrusion amount of the movable transfer surface member 20a and 20b are adjusted by springs 26a, 26b of a resilient means. (Fig. 9).

In Figs. 8-9, the movable transfer surface members 20a and 20b are shaped in accordance to corresponding transfer portions (the constricted portion 45 and the shoulder portion 44) of the container 41 and at the same time the whole portion of outer the radius direction of the movable transfer

AUSTRALIAN PATENT OFFICE

surface member 20a is curved and a portion of outer of the radius direction of the movable transfer surface member 20b is chamfered. The above described formings eliminate friction and interference of the movable transfer surface members 20a, 20b with the imprint rolls 51, 52 and 53 when transferring.

Incidentally, the techniques shown from Figs. 1-9 are only examples and not intended to limit the technical scope of the present invention.

Effect of the Invention

The present invention is structured described above, a container having a constricted portion recessed from a surface of a portion having a long radial length can be concurrently printed in multiple colours with a simple structure using a spring.

And even when the lengths in the radial direction of the shoulder portion, the barrel portion, and the constricted portion differ with each other, a printing work or a transfer work for each portion can be suitable performed.

Throughout this specification and the claims which follow, unless the context requires otherwise, the word "comprise", and variations such as "comprises" or comprising" , will be understood to imply the inclusion of a stated integer or step or group of integers or steps but not the exclusion of any other integer or step or group of integers or steps.

AUSTRALIAN PATENT OFFICE

THE CLAIMS DEFINING THE INVENTION ARE AS FOLLOWS :

1. A printing apparatus for a container that has a circular cross section to print by transferring ink on a circular cross sectional cylindrical container having a constricted portion inward along the radius, said printing apparatus comprising

imprint rolls for each portion having a different radially length on the circular sectional container,

said imprint rolls being arranged in a way that the imprint roll for printing a portion having the largest radial section of said container among portions to be printed is first placed at an upstream point along a rotational direction of a transfer drum, then other rolls are placed from next to the first roll in decreasing order in length of the radius of the corresponding portion to be printed by the roll,

said transfer drum having a fixed transfer surface member and a movable transfer surface member, and

said movable transfer surface member being resiliently biased along a direction of protrusion by a resilient means.

2. A printing apparatus for printing a container having a circular cross section to transfer ink on a cylindrical container which has a shoulder portion and a circular sectional constricted portion recessed from the surface of said shoulder portion and a barrel portion having the same length of diameter as said shoulder portions, said printing apparatus comprising:

a transfer drum having a fixed transfer surface member for said shoulder portion, a ring-shaped groove, a plurality of movable transfer surface members being arranged in a reciprocal manner with reference to said groove and being biased along a direction of protrusion, and a fixed transfer surface member for a barrel portion;

a cleaning roll and first imprint roll, which are arranged along one side of said transfer drum in a rotatable manner and make contact in pressure with said fixed transfer surface member for the shoulder portion, said fixed transfer surface member for the barrel member and said movable transfer surface member;

a second imprint roll contacting in pressure with said movable transfer surface

AUSTRALIAN PATENT OFFICE

member;

an arc-shaped guide being arranged around another side of said transfer drum with a clearance from said transfer drum;

a timing screw; and

a guide rail.

3. Printing apparatus substantially as hereinbefore described with reference to the accompanying drawings.

Dated this 7th day of July, 1998

KABUSHIKI KAISHA YAKULT HONSHA

By Its Patent Attorneys

DAVIES COLLISON CAVE

AUSTRALIAN PATENT OFFICE

ABSTRACT

It is an object of the present invention to simultaneously print in multiple colours with an apparatus of a simple structure on a container having a constricted portion recessed from a barrel surface.

In order to achieve the object, according to the present invention, the container (1) is carried by a timing screw (35) while rotating a transfer drum (10), ink is transferred by a first imprint roll (31) on a fixed transfer surface member (11) for printing a shoulder portion (4) and a fixed transfer surface member (13) for printing a barrel portion (6). Ink is transferred by a second imprint roll on a movable transfer surface member (20), and after printing with transferring ink on the shoulder portion (4), the barrel portion (6) and a constricted portion (5) of the container (1) which is inserted between a guide member (34) and a transfer roll (10) and moved while rotating residual inks on the fixed transfer surface member (11) for the shoulder portion, the fixed transfer surface member (13) for the barrel portion, and the movable transfer surface member (2) are removed by a cleaning roll (30).

AUSTRALIAN PATENT OFFICE

56587/96

Fig. 1

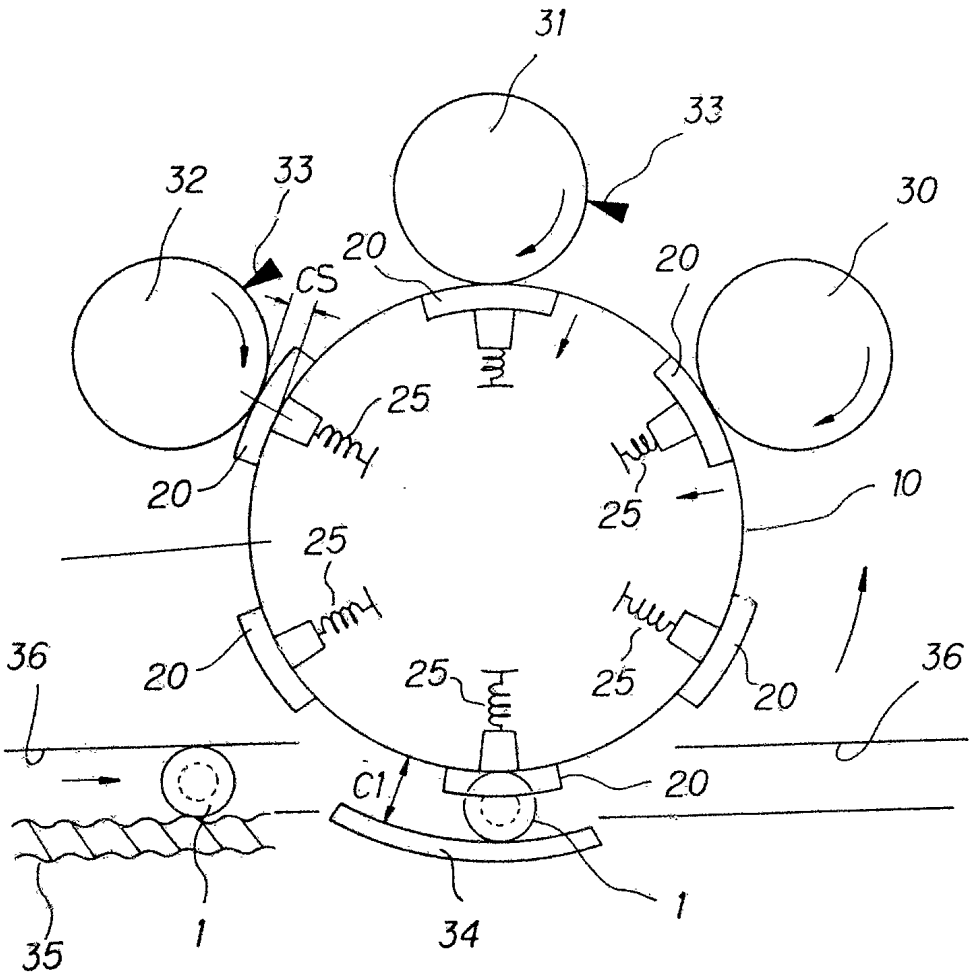

56587/96

Fig. 2

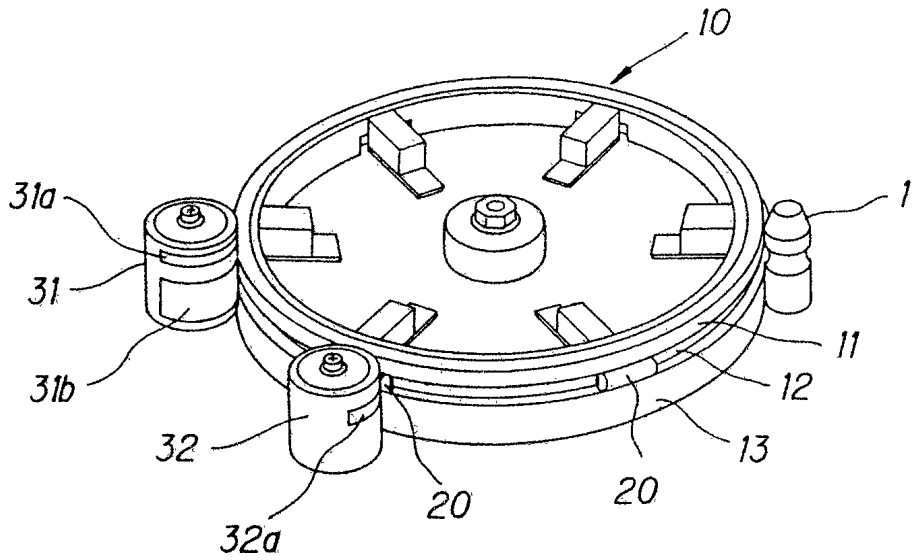

Fig. 3

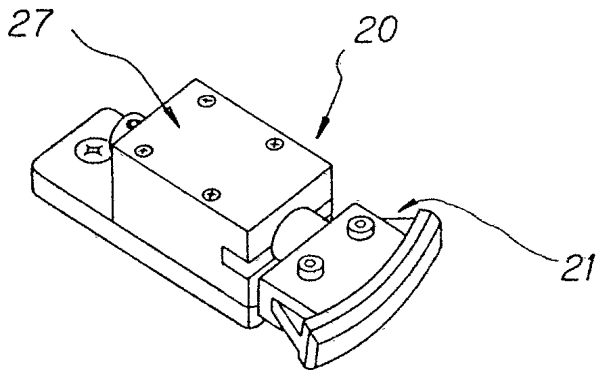

Fig. 4

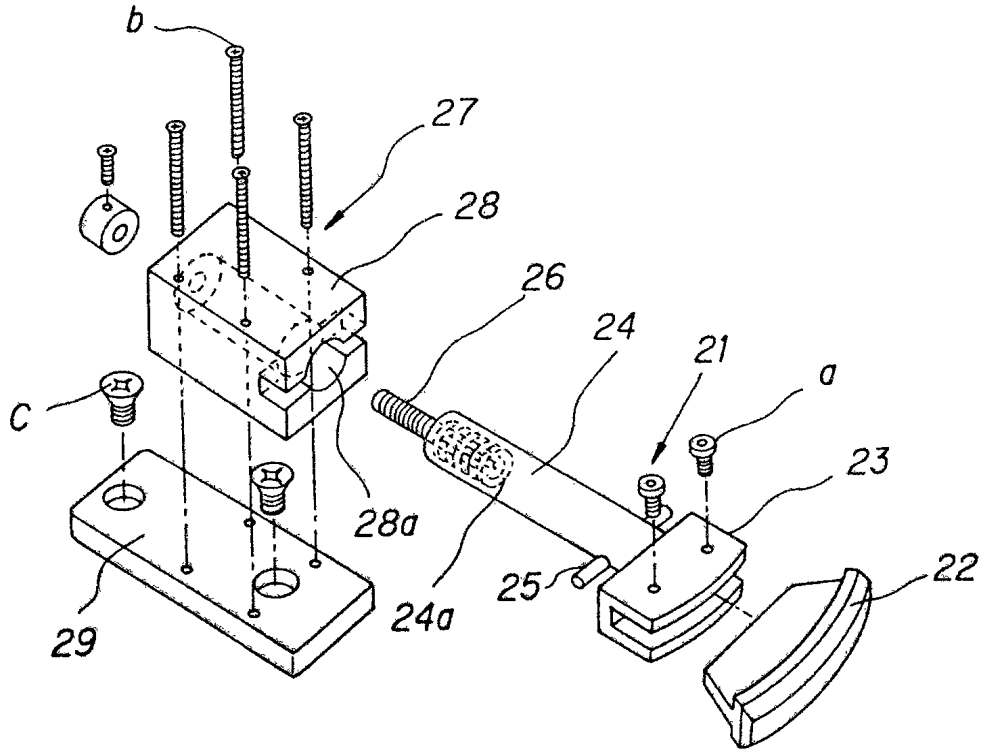

Fig. 5

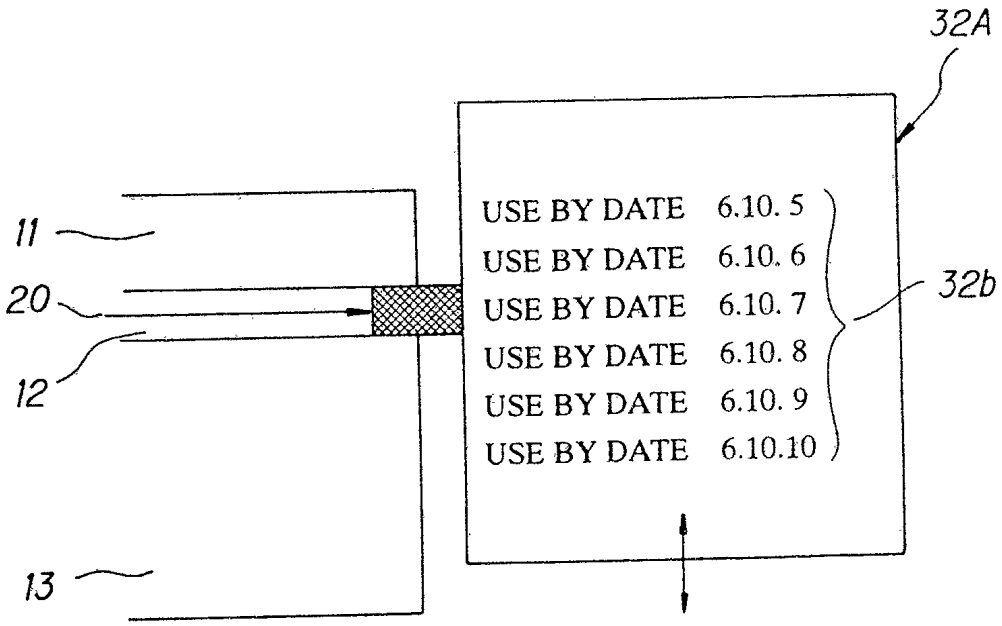
32A
11
20
12
13
USE BY DATE 6.10. 5
USE BY DATE 6.10. 6
USE BY DATE 6.10. 7
USE BY DATE 6.10. 8
USE BY DATE 6.10. 9
USE BY DATE 6.10.10
32b

Fig. 6

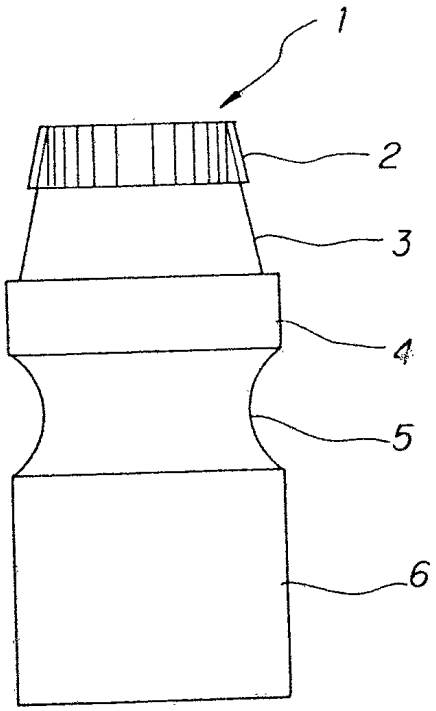

Fig. 7

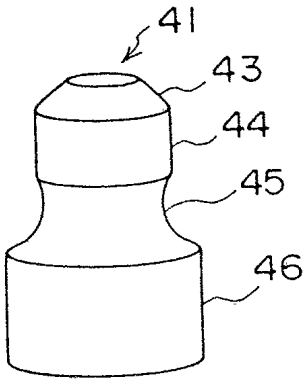

Fig. 8

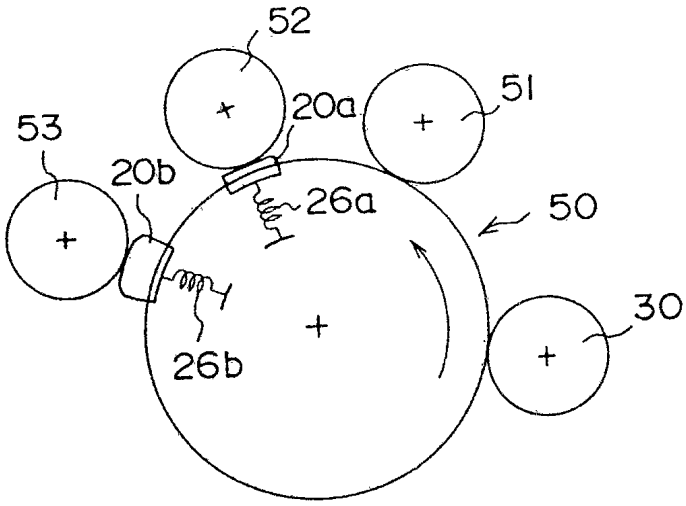

Fig. 9

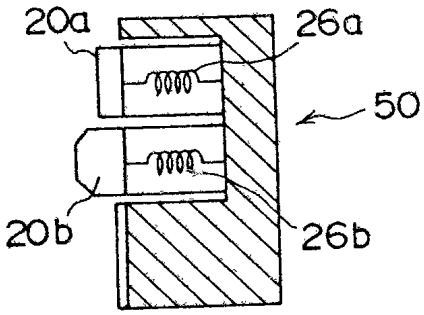

INTERNATIONAL SEARCH REPORT

International application No.
PCT/JP96/01214

A. CLASSIFICATION OF SUBJECT MATTER

Int. Cl^6 B41F17/18

According to International Patent Classification (IPC) or to both national classification and IPC

B. FIELDS SEARCHED

Minimum documentation searched (classification system followed by classification symbols)

Int. Cl^6 B41F17/18, B41K1/26

Documentation searched other than minimum documentation to the extent that such documents are included in the fields searched

Jitsuyo Shinan Koho 1924 - 1996
Kokai Jitsuyo Shinan Koho 1971 - 1995
Toroku Jitsuyo Shinan Koho 1994 - 1996

Electronic data base consulted during the international search (name of data base and, where practicable, search terms used)

C. DOCUMENTS CONSIDERED TO BE RELEVANT

Category*	Citation of document, with indication, where appropriate, of the relevant passages	Relevant to claim No.
Y	JP, 63-37707, B2 (Yakult Honsha Co., Ltd.), July 26, 1988 (26. 07. 88), Column 3, line 10 to column 4, line 28; Figs. 1 to 3 (Family: none)	1, 2
Y	JP, 50-4017, Y1 (Kiyotaka Furuno), February 3, 1975 (03. 02. 75), Column 1, lines 28 to 34; Fig. 1 (Family: none)	1, 2

☐ Further documents are listed in the continuation of Box C. ☐ See patent family annex.

* Special categories of cited documents:

"A" document defining the general state of the art which is not considered to be of particular relevance

"E" earlier document but published on or after the international filing date

"L" document which may throw doubts on priority claim(s) or which is cited to establish the publication date of another citation or other special reason (as specified)

"O" document referring to an oral disclosure, use, exhibition or other means

"P" document published prior to the international filing date but later than the priority date claimed

"T" later document published after the international filing date or priority date and not in conflict with the application but cited to understand the principle or theory underlying the invention

"X" document of particular relevance; the claimed invention cannot be considered novel or cannot be considered to involve an inventive step when the document is taken alone

"Y" document of particular relevance; the claimed invention cannot be considered to involve an inventive step when the document is combined with one or more other such documents, such combination being obvious to a person skilled in the art

"&" document member of the same patent family

Date of the actual completion of the international search	Date of mailing of the international search report
July 25, 1996 (25. 07. 96)	August 6, 1996 (06. 08. 96)
Name and mailing address of the ISA/ Japanese Patent Office	Authorized officer
Facsimile No.	Telephone No.

Form PCT/ISA/210 (second sheet) (July 1992)

国際調査報告	国際出願番号　PCT／JP96／01214

A.　発明の属する分野の分類（国際特許分類（IPC））

Int. Cl⁶　B41F17／18

B.　調査を行った分野

調査を行った最小限資料（国際特許分類（IPC））

Int. Cl⁶　B41F17／18, B41K1／26

最小限資料以外の資料で調査を行った分野に含まれるもの

日本国実用新案公報　　1924－1996年
日本国公開実用新案公報　1971－1995年
日本国登録実用新案公報　1994－1996年

国際調査で使用した電子データベース（データベースの名称、調査に使用した用語）

C.　関連すると認められる文献

引用文献のカテゴリー＊	引用文献名　及び一部の箇所が関連するときは、その関連する箇所の表示	関連する請求の範囲の番号
Y	JP, 63－37707, B2（株式会社ヤクルト本社），26. 07. 1988（26. 07. 88），第3欄，第10行－第4欄，第28行 第1－3図（ファミリーなし）	1，2
Y	JP, 50－4017, Y1（古野清孝），03. 02. 1975（03. 02. 75），第1欄，第28－34行，第1図（ファミリーなし）	1，2

☐ C欄の続きにも文献が列挙されている。　☐ パテントファミリーに関する別紙を参照。

＊　引用文献のカテゴリー
「A」特に関連のある文献ではなく、一般的技術水準を示すもの
「E」先行文献ではあるが、国際出願日以後に公表されたもの
「L」優先権主張に疑義を提起する文献又は他の文献の発行日若しくは他の特別な理由を確立するために引用する文献（理由を付す）
「O」口頭による開示、使用、展示等に言及する文献
「P」国際出願日前で、かつ優先権の主張の基礎となる出願の日の後に公表された文献
「T」国際出願日又は優先日後に公表された文献であって出願と矛盾するものではなく、発明の原理又は理論の理解のために引用するもの
「X」特に関連のある文献であって、当該文献のみで発明の新規性又は進歩性がないと考えられるもの
「Y」特に関連のある文献であって、当該文献と他の1以上の文献との、当業者にとって自明である組合せによって進歩性がないと考えられるもの
「&」同一パテントファミリー文献

国際調査を完了した日	国際調査報告の発送日
25. 07. 96	06.08.96

国際調査機関の名称及びあて先	特許庁審査官（権限のある職員）	
日本国特許庁（ISA／JP） 郵便番号100 東京都千代田区霞が関三丁目4番3号	白樫泰子	2C　6863
	電話番号　03－3581－1101　内線　3222	

様式PCT／ISA／210（第2ページ）（1992年7月）