US 20140115813A1

(19) **United States**

(12) **Patent Application Publication**

(10) **Pub. No.: US 2014/0115813 A1**

(43) **Pub. Date: May 1, 2014**

Tussy

(54) **DUSTPAN**

(71) Applicant: **Kevin Alan Tussy**, Henderson, NV (US)

(72) Inventor: **Kevin Alan Tussy**, Henderson, NV (US)

(21) Appl. No.: **14/067,554**

(22) Filed: **Oct. 30, 2013**

Related U.S. Application Data

(60) Provisional application No. 61/720,158, filed on Oct. 30, 2012.

Publication Classification

(51) **Int. Cl.**
A47L 13/52 (2006.01)

(52) **U.S. Cl.**
CPC *A47L 13/52* (2013.01)
USPC **15/257.1**

(57) **ABSTRACT**

A dustpan comprising a dustpan body having a collection area to hold debris swept into the dustpan and a front edge, a thin plate attached to the underside of the dustpan body at the front edge so that it forms a sharp leading edge of the dustpan, and a plurality of teeth spaced along the front edge of the dustpan, forming a protective comb over the sharp leading edge of the dustpan.

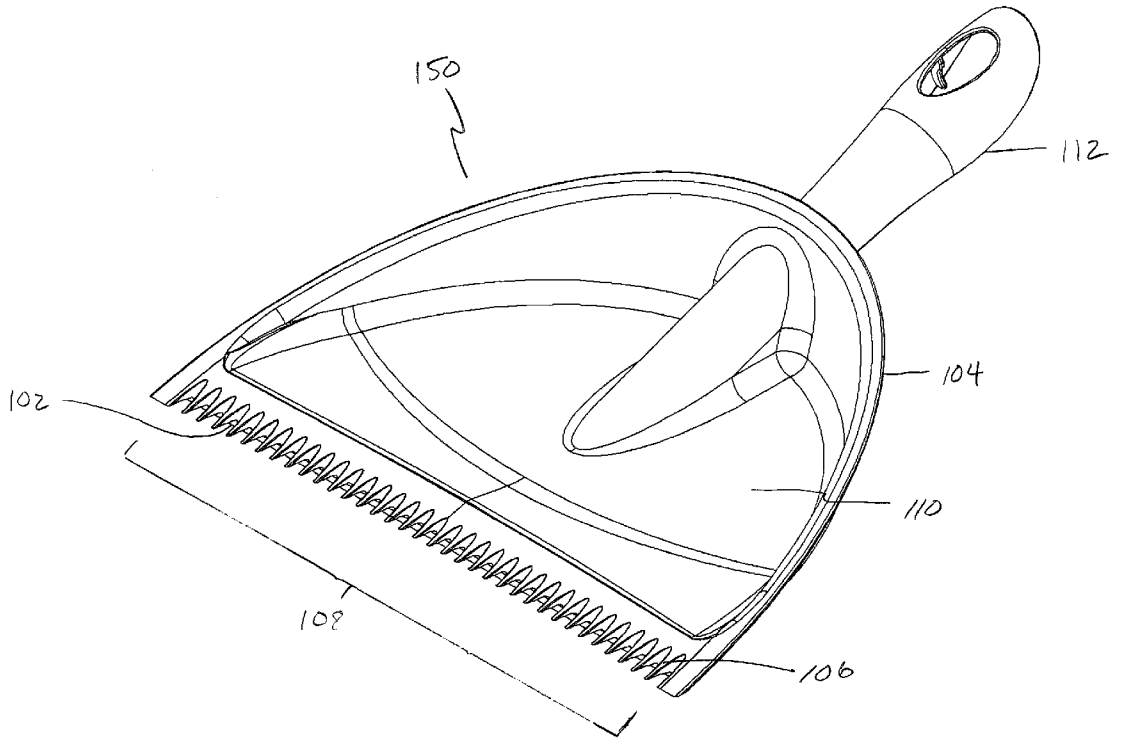

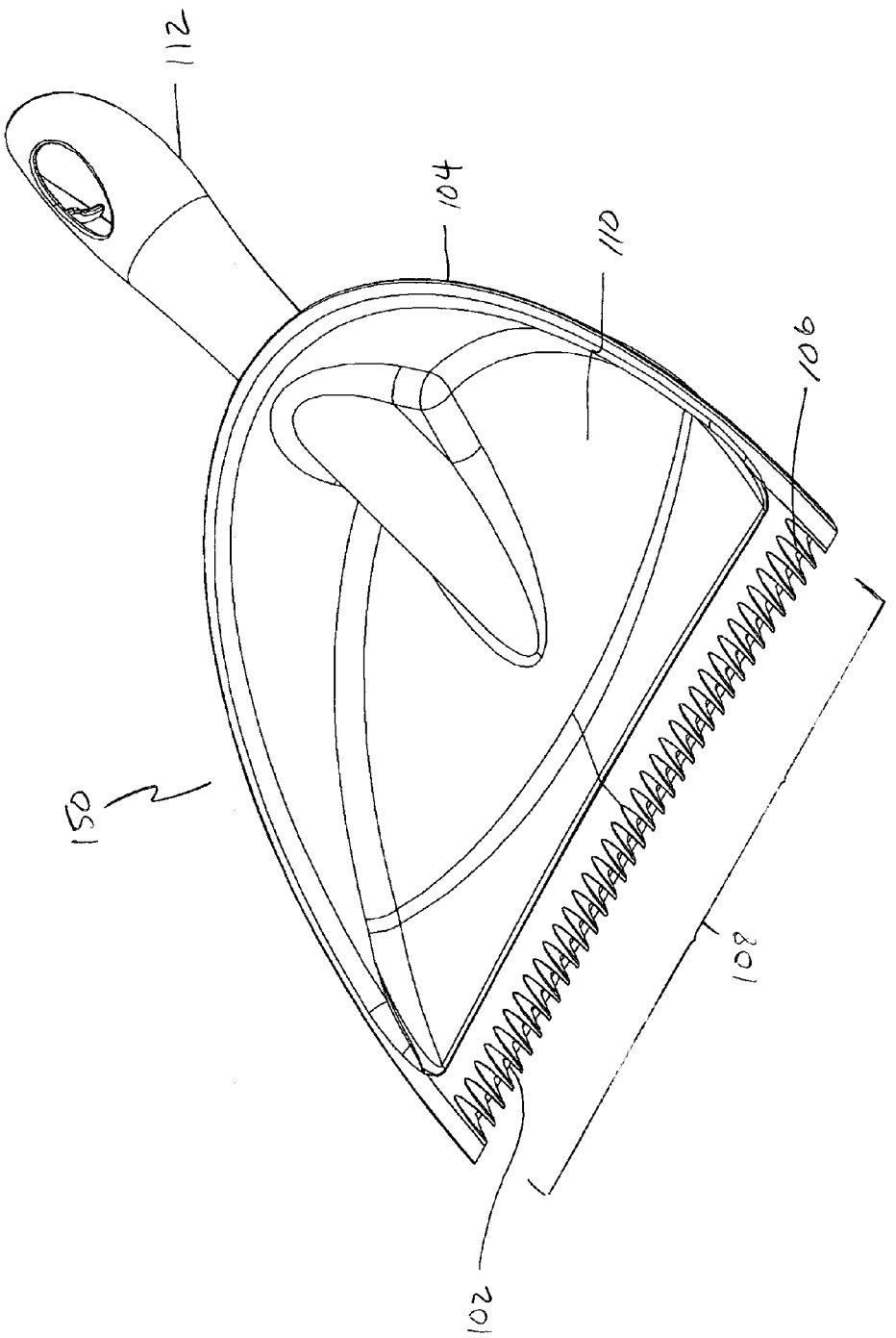

FIG. 1

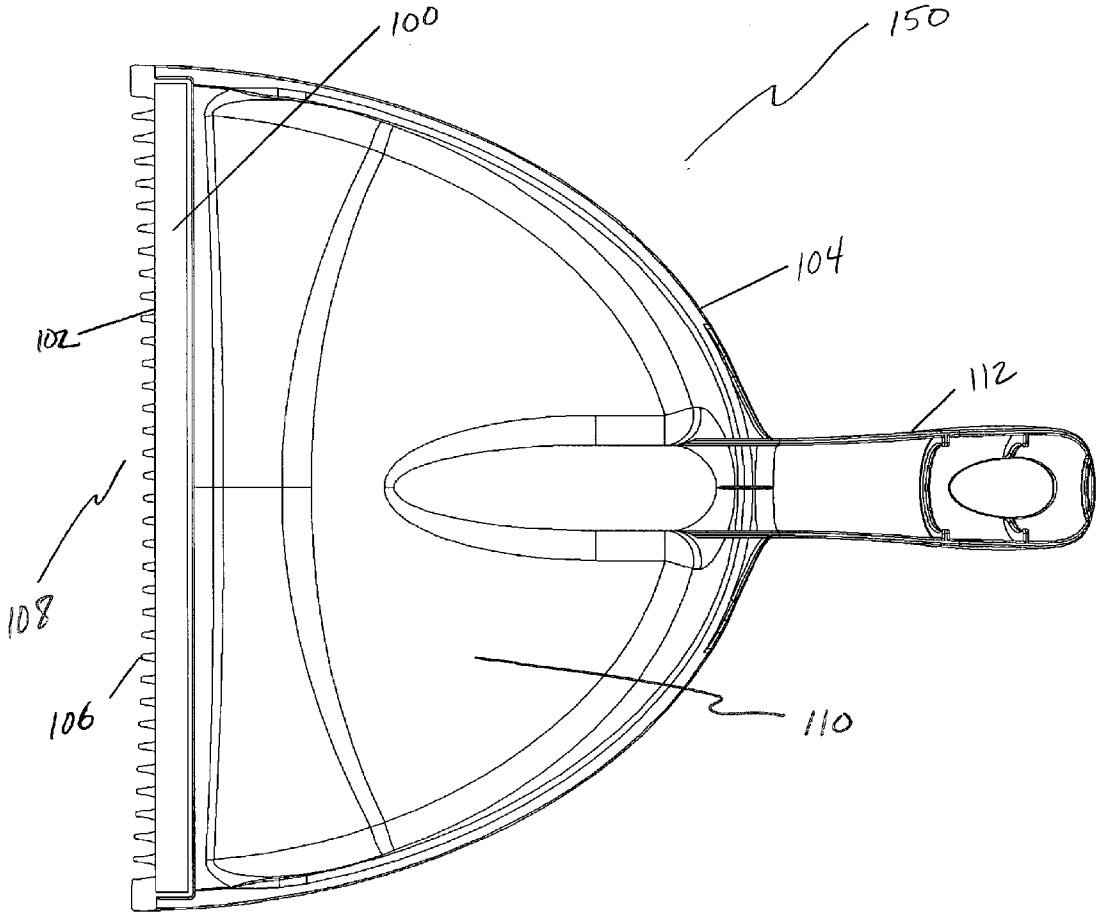

FIG. 2

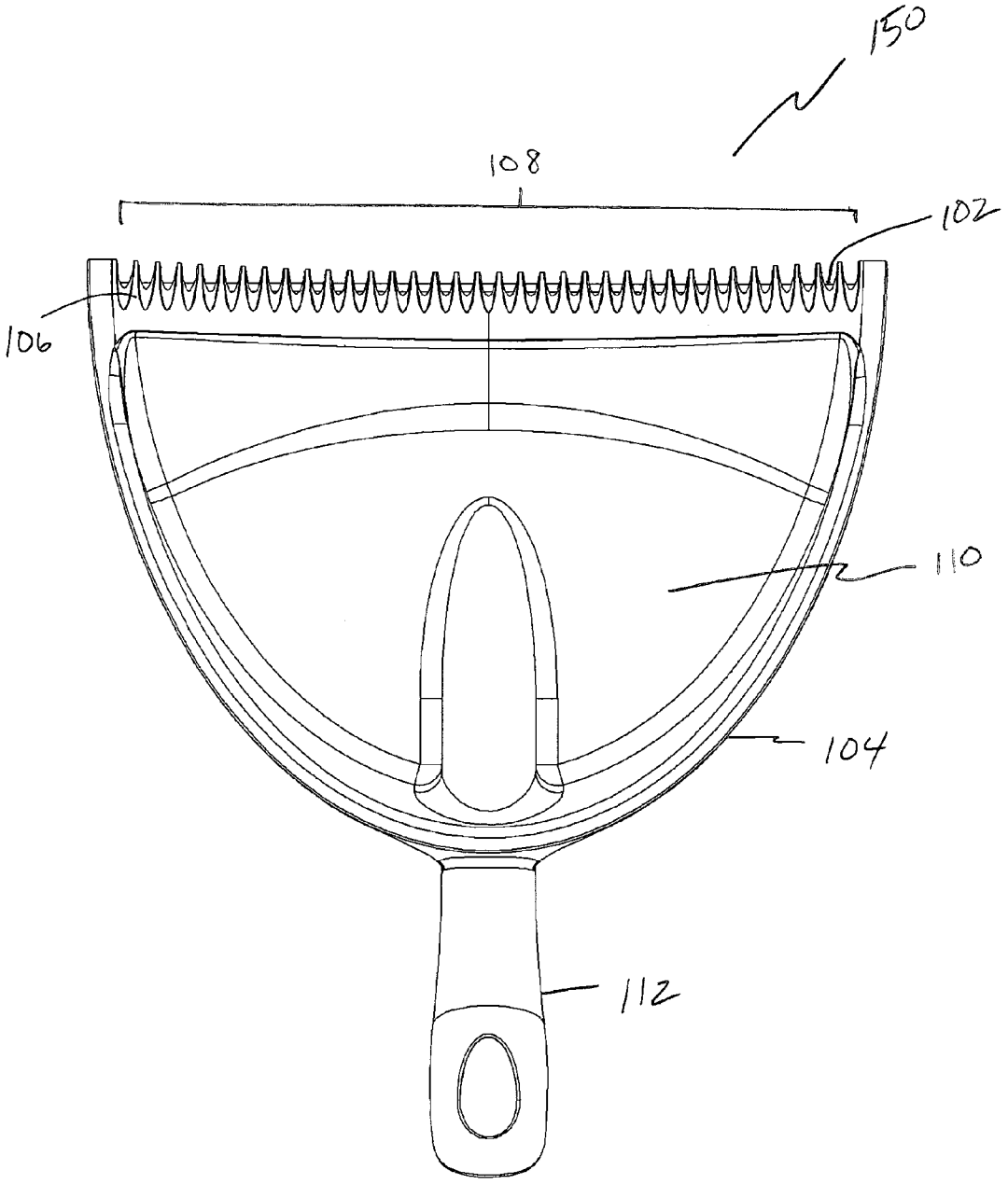

FIG. 3

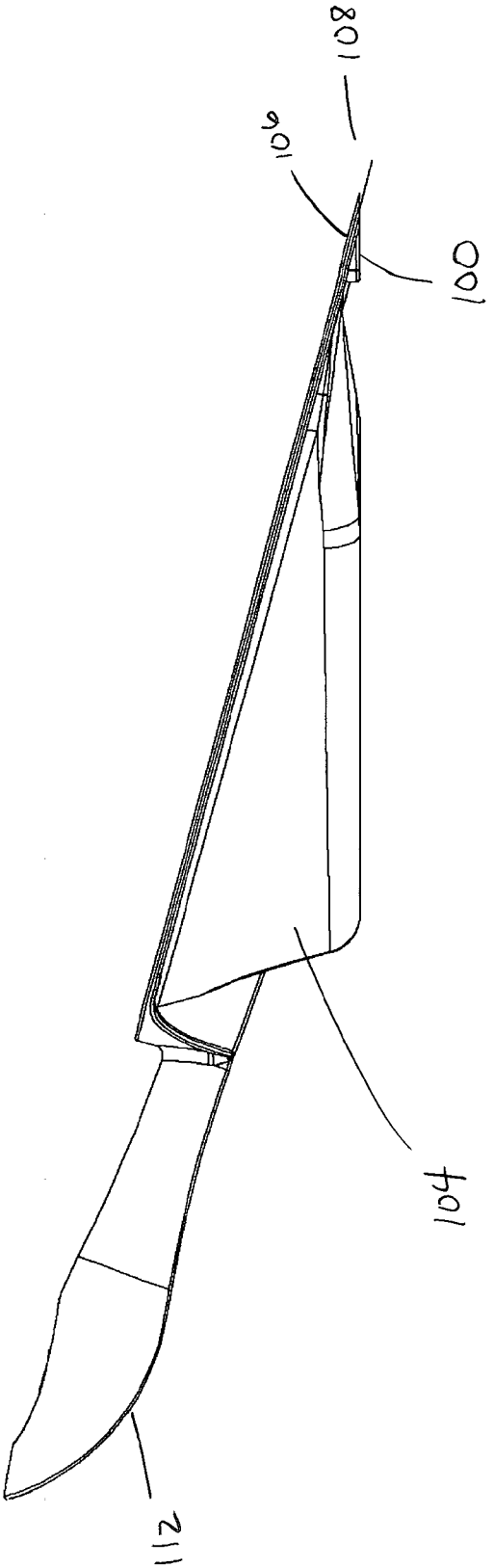

Fig. 4

DUSTPAN

BACKGROUND OF THE INVENTION

[0001] This application claims the benefit of U.S. Provisional Patent Application No. 61/720,158 filed on Oct. 30, 2012, and which is hereby incorporated by reference in its entirety as if set forth herein.

FIELD OF THE INVENTION

[0002] The present invention relates to field of dustpans.

DESCRIPTION OF RELATED ART

[0003] For as long as there have been brooms and dustpans, users have been frustrated by the thin line of dust that is left behind after the dustpan is used to sweep up a pile of dust and debris. Because the leading edge of prior art dustpans is not sufficiently sharp, some dust gets caught on the edge and simply cannot make the jump up into the dustpan. The present invention overcomes this problem, providing an improved dustpan with an extremely sharp leading edge that prevents the remnant dust line.

SUMMARY OF THE INVENTION

[0004] In various exemplary embodiments, a dustpan comprising a dustpan body having a collection area to hold debris swept into the dustpan and a front edge, a thin plate attached to the underside of the dustpan body at the front edge so that it forms a sharp leading edge of the dustpan, and a plurality of teeth spaced along the front edge of the dustpan, forming a protective comb over the sharp leading edge of the dustpan. In an exemplary embodiment, the teeth of the dustpan are uniformly spaced along the front edge of the dustpan. In various exemplary embodiments, the thin plate is made of metal, plastic, ceramic, glass or rubber.

BRIEF DESCRIPTION OF THE DRAWINGS

[0005] FIG. **1** is a top perspective view of an exemplary embodiment of the dustpan disclosed and claimed herein.

[0006] FIG. **2** is a bottom view of an exemplary embodiment of the dustpan disclosed and claimed herein.

[0007] FIG. **3** is a top view of an exemplary embodiment of the dustpan disclosed and claimed herein.

[0008] FIG. **4** is a side view of an exemplary embodiment of the dustpan disclosed and claimed herein.

DETAILED DESCRIPTION OF THE PREFERRED EMBODIMENTS

[0009] The following description is presented to enable any person skilled in the art to make and use the invention. For purposes of explanation, specific nomenclature is set forth to provide a thorough understanding of the present invention. Descriptions of specific embodiments or applications are provided only as examples. Various modifications to the embodiments will be readily apparent to those skilled in the art, and general principles defined herein may be applied to other embodiments and applications without departing from the spirit and scope of the invention. Thus, the present invention is not intended to be limited to the embodiments shown, but is to be accorded the widest possible scope consistent with the principles and features disclosed herein.

[0010] Referring to FIGS. **1** through **5**, in various exemplary embodiments of the present invention, a dustpan **150** is provided with a thin plate **100** with a sharp leading edge **102** attached to the underside at the front edge **108** of a commonly shaped dustpan body **104**. The dustpan body **104** can have any suitable shape. In various exemplary embodiments, the dustpan body **104** has a collection area **110** behind the front edge to hold material swept over the front edge into the dustpan, and a handle **112** to hold the dustpan in place.

[0011] The plate **100** is aligned such that its sharp leading edge **102** forms the leading edge of the dustpan itself. In order to protect the user from cutting themselves on this sharp leading edge **102**, a series of substantially uniformly distributed teeth **106** extend forward from the dustpan over the sharp leading edge **102**. In an exemplary embodiment, these teeth **106** are uniformly spaced along the entire front edge of the dustpan, forming a protective comb over the sharp leading edge **102** of the thin plate **100**. The teeth **106** should be spaced closely enough to prevent the user from contacting the sharp leading edge **102**, but sufficiently far apart to allow the bristles of a broom to pass freely between them.

[0012] The exemplary dustpan is used like an ordinary dustpan. The user simply places the dustpan on the surface to be swept, and sweeps dust and debris into the pan. Because the leading edge **102** is sharp, dust and debris pass freely over it and into the bottom of the dustpan without any buildup at the edge. The spacing between the teeth allows the bristles of the broom to push the dust and debris all the way into the dustpan collection area **110** without interference.

[0013] It will be easily understood that the present invention can be used on dustpans or dustsheets of every conceivable configuration. Moreover, the thin plate **100** can be made of any suitable material, including metal, plastic, rubber, glass or ceramic. The dustpan body **104** and the thin teeth **106** can similarly be made from any suitable material.

What is claimed is:

1. A dustpan comprising:

a dustpan body having a collection area to hold debris swept into the dustpan and a front edge;

a thin plate attached to the underside of the dustpan body at the front edge so that it forms a sharp leading edge of the dustpan;

a plurality of teeth spaced along the front edge of the dustpan, forming a protective comb over the sharp leading edge of the dustpan.

2. The dustpan of claim **1**, wherein the teeth of the dustpan are uniformly spaced along the front edge of the dustpan.

3. The dustpan of claim **1**, wherein the thin plate is made of metal.

4. The dustpan of claim **1**, wherein the thin plate is made of plastic.

5. The dustpan of claim **1**, wherein the thin plate is made of ceramic.

6. The dustpan of claim **1**, wherein the thin plate is made of glass.

7. The dustpan of claim **1**, wherein the thin plate is made of rubber.

* * * * *