Nov. 22, 1949 P. CHARRIN 2,488,803

GUN PERFORATOR

Filed May 31, 1946 2 Sheets-Sheet 1

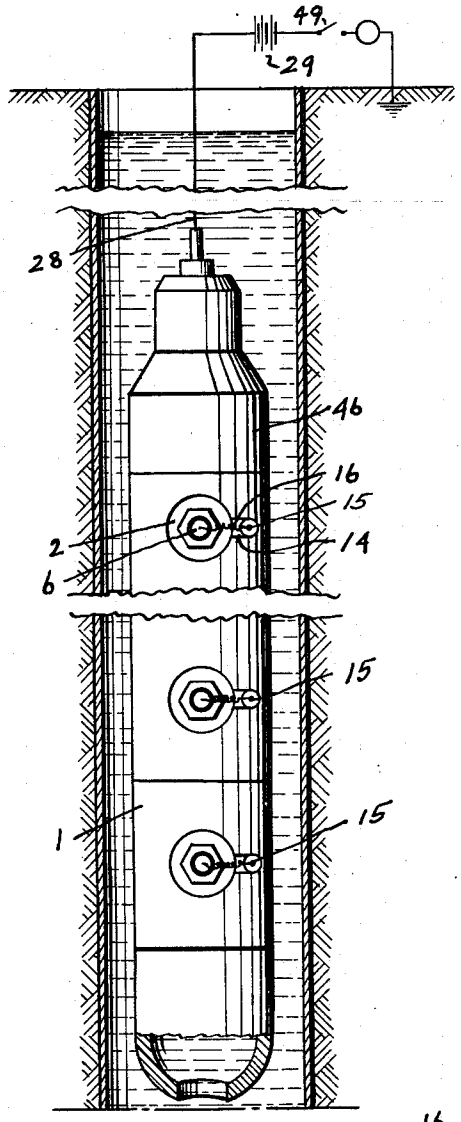

Fig. 1

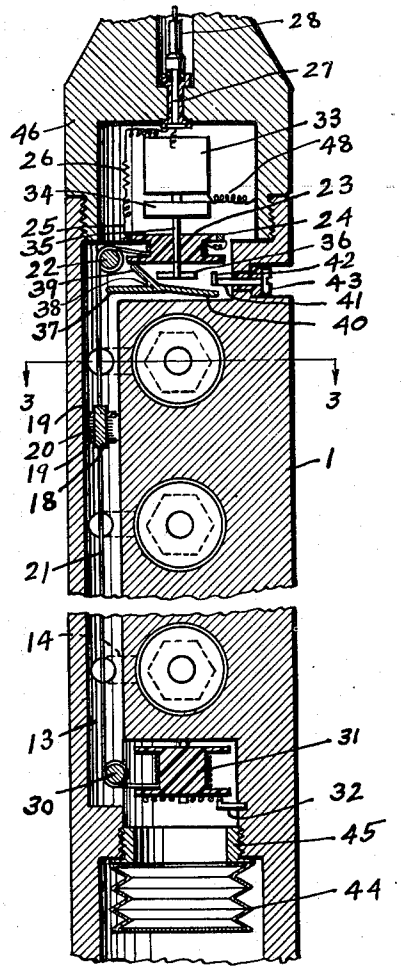

Fig. 2

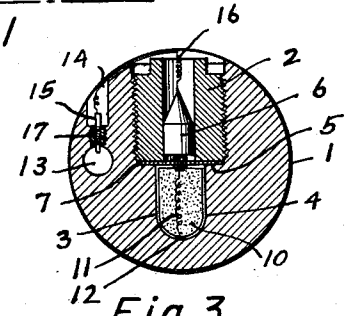

Fig. 3

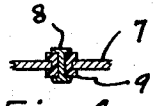

Fig. 4

INVENTOR.
Paul Charrin

BY

E. V. Hardway
attorney.

Nov. 22, 1949 P. CHARRIN 2,488,803

GUN PERFORATOR

Filed May 31, 1946 2 Sheets-Sheet 2

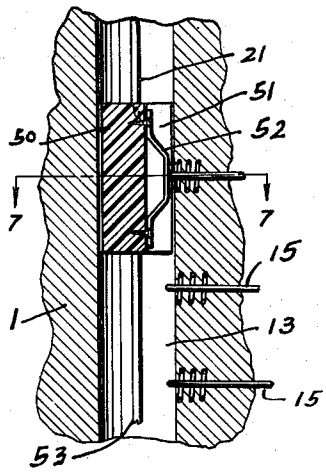

Fig. 6

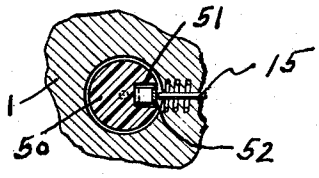

Fig. 7

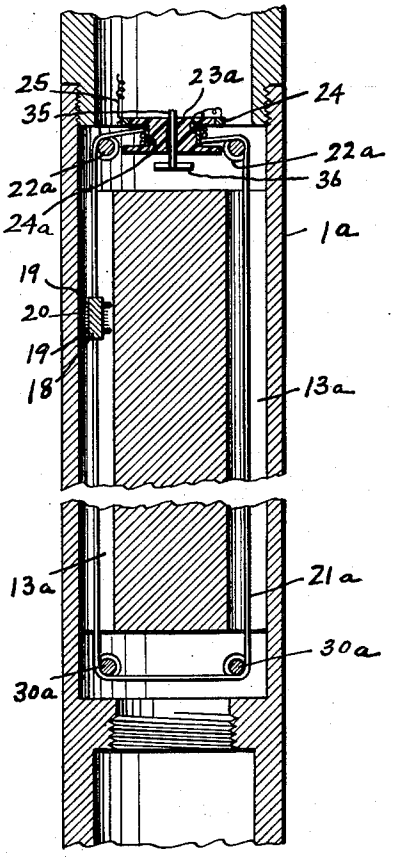

Fig. 5

INVENTOR.
Paul Charrin

BY

E. V. Hardway
attorney.

Patented Nov. 22, 1949 2,488,803

UNITED STATES PATENT OFFICE

2,488,803

GUN PERFORATOR

Paul Charrin, Houston, Tex.

Application May 31, 1946, Serial No. 673,424

7 Claims. (Cl. 164—0.5)

1

This invention relates to a gun perforator.

An object of the invention is to provide a tool of the character described specially designed for use in perforating well casing and which includes a body provided with a plurality of radial gun barrels and associated firing chambers to receive explosive charges with projectiles, or bullets, in the barrels to perforate the casing upon firing of the respective charges together with novel means for selectively firing the charges.

It is another object of the present invention to provide, in a gun perforator of the character described, a body which may, if desired, be made up of a plurality of sections, preferably joined together by threads, thus facilitating the construction of a gun perforator carrying a plurality of barrels and the associated projectiles and firing charges.

It is a further object of the invention to provide a gun perforator of the character described having a channel therein to receive a sliding contact member whereby the charges are selectively fired and of such construction that the necessity for insulating the channel is dispensed with.

A further object of the invention is to provide a gun perforator of such construction that the pressure within the tool itself will be substantially equal to the outside pressure to minimize the entrance of the well liquid into the interior mechanism of the perforator.

The elimination of insulating materials, in the construction of a gun perforator, is important for the reason that such insulating materials are either fragile or are not capable of withstanding the changes in temperature to which a gun perforator is subjected while used in a deep well; and for the further reason that a perforating gun can be more easily and cheaply manufactured if the insulation is minimized.

With the above and other objects in view the invention has particular relation to certain novel features of construction, operation and arrangement of parts, examples of which are given in this specification and illustrated in the accompanying drawings, wherein:

Figure 1 is a side elevation of the gun perforator, partly in section, shown located in a well.

Figure 2 is a fragmentary, vertical, sectional view thereof.

Figure 3 is a cross-sectional view taken on the line 3—3 of Figure 2.

Figure 4 is an enlarged, fragmentary, sectional view of a form of cartridge support employed.

Figure 5 is a fragmentary, longitudinal, sectional view of another embodiment of the invention.

2

Figure 6 is a fragmentary, vertical, sectional view illustrating a form of sliding contact employed; and,

Figure 7 is a fragmentary, transverse, sectional view taken on the line 7—7 of Figure 6.

Referring now more particularly to the drawings wherein like numerals of reference designate the same parts in each of the figures, the numeral 1 designates the gun body. This body may be composed of suitable metal and, if desired, may be made up of a number of sections, as illustrated in Figure 1, which may be screwed together. The body is provided with a plurality of gun barrels 2 which may be screwed therein and behind each barrel is provided with a chamber 3 to receive a cartridge 4 which may be fitted in said chamber before the corresponding barrel is screwed into place. Each chamber 3 is somewhat smaller in transverse diameter than the outside diameter of the corresponding barrel thus providing an inside, annular, outwardly facing shoulder 5.

Mounted in each barrel there is a bullet, or projectile, 6 whose outer end is preferably pointed.

The chambers and barrels are usually regularly spaced along the gun and, in practice, they are regularly spaced around the gun usually about ninety degrees apart. In the present illustration, for convenience, they are all shown pointing in the same direction.

Between the inner end of each barrel 2 and the opposing shoulder 5 there is inserted a supporting disc 7 preferably composed of metal. However, it may be made of any material that will withstand the hydrostatic pressure of the well fluid. If the disc is composed of conductive material then it is provided with a conductor, such as rivet, 8 which is insulated from the disc by means of an insulating sleeve 9, said rivet and insulating sleeve extending centrally through the disc 7. Should the disc 7 be composed of insulating material then the conductor 8 may be inserted directly through said disc without the necessity of insulation.

The cartridge 4 inserted into the chamber 3 contains an explosive charge 10 and a fuse wire 11 extends from the conducting element 8 through the explosive charge and is connected to the contact 12 which in turn is in contact with the gun body 1.

When an electric current is sent through the fuse wire the explosive charge is ignited and explodes.

The bullet 6 is insulated from the barrel 2 by

a suitable insulating coating but is in direct contact with the contact element, or rivet, 8.

The body 1 is provided with a bore 13 extending substantially from end to end of the body and leading from the muzzle end of each barrel around the body there is a groove 14. A contact rod 15 has its outer end extending into each groove 14 and its inner end projecting into the bore 13, each contact rod being insulated from the body.

An electrical conductor 16 is connected, at one end, to each bullet and is located in the corresponding groove 14 with its other end connected to the outer end of the corresponding contact rod 15.

Each insulating rod 15 may be molded in a plug 17 of Bakelite or similar insulating material which may be threaded into the body 1, as shown in Figure 3.

Within the bore 13 there is a sliding contact member which is designated generally by the numeral 18 and which has two spaced flanges 19, 19 formed of insulating material which fit rather snugly in said bore and between said flanges the sliding contact is provided with a wire brush 20 of radial wires and thus forming a contact. The diameter of this contact 20 is somewhat less than that of the insulating flanges 19 so that the wires will not contact the wall of the channel 13 but this brush is of sufficient diameter so that the wires will touch each one of the contact rods 15 as the sliding contact 18 passes said contact rods.

Connected to the sliding contact 18 there is a conductor 21 which is preferably insulated. This conductor 21 operates over an upper pulley 22 mounted in the body and is coiled onto spool 23 which is mounted in the body to turn on a vertical axis and is composed of insulating material. One flange of this spool carries a metallic ring 24 with which a brush 25 is in constant frictional contact. This brush is electrically connected with a resistor 26 which in turn is connected to an insulated rod 27 to which an insulated cable 28 is connected, which cable is used for suspending the gun perforator in the well and for carrying an electrical current from a suitable source of electricity, as 29, at the ground surface. One end of conductor 21 is connected to ring 24.

At the bottom of the body the conductor 21 passes over a pulley 30 and is wound on a spool 31 formed of insulating material and which is mounted to rotate on a vertical axis. A coil spring, as 32, is connected to the spool 31 and tends to spool the conductor 21 onto the spool 31.

There is an electric motor 33 in the body and associated with it there is reduction gearing 34. A shaft 35 is driven from said motor through said gearing. In the present illustration, the motor and gearing are shown diagrammatically. The shaft 35 is slidable axially through the spool 23 and carries a clutch 36 at its lower end by means of which the shaft may be clutched with and disengaged from said spool. This clutch is also shown only diagrammatically, as any conventional type of clutch may be used. When the clutch is engaged with said spool 23, said spool will be driven from said shaft, but when disengaged, the shaft will rotate independently from the spool.

There is a lever 37 beneath the spool 23 and which is mounted to pivot by means of a transverse shaft 38. This lever is provided with two additional arms 39 and 40. Extended laterally through the wall of the body 1, there is a shaft 41 whose inner end is provided with a cam 42 and whose outer end is provided with a slotted

head 43. This shaft 41 is surrounded by a conventional stuffing box to exclude the well liquid.

It will be noted from an inspection of Figure 2 that the free end of the lever 37 projects over the upper end of the bore 13. It will also be noted that the cam 42 is positioned to co-act with the arm 40. Therefore, during the perforating operation, should the sliding contact 18 come into contact with said lever 37, upon further upward movement of said sliding contact 18, the arm 39 will contact with and elevate and declutch the spool 23 from the shaft 35; also a turn of the shaft 41 will bring the cam 42 into contact with the arm 40, depressing said arm and declutching the spool 23 from the shaft 35 as above stated.

At the lower end of the body, there is a bellows 44 which may be formed of any suitable material, either metal, rubber or plastic. This bellows may be provided with an externally threaded tubular nipple 45 whereby it may be screwed into the body.

The upper end of the body is preferably formed with a detachable head 46 which encloses the motor, gearing and the operative mechanism connected therewith. The motor is connected into the main electrical circuit which is grounded on the body by the conductor 48.

With the tool assembled as above described and as shown in Figure 2, it should then be completely filled with an insulating fluid, such as oil. This fluid should fill the vacant space in the head 46, the bore 13 and the bellows 44. Any change of volume of the insulating fluid, on account of temperature or pressure variations, will be compensated by the expansion or contraction of the bellows, thus keeping the pressure within the tool and on the outside of the tool the same.

When the tool is assembled and equipped with the firing units and filled with the insulating fluid, the shaft 40 should be turned in order to disengage the spool 23 from the clutch 36 so that the spool may freely turn. Thereupon, the spring 32 on the lower spool 31 will wind the conductor 16 onto the spool 31, thus moving the sliding contact 18 to the lower end of the bore 13 and in position to make contact with the lower contact rod 15 as the sliding contact moves upwardly. The shaft 41 is then turned back to its neutral position and the gun perforator is then lowered into the well. The main conductor 28 is grounded at the surface and is provided with a switch 49 located so as to be readily controlled by an operator.

When the gun perforator has reached the selected position for firing, the switch 49 is closed. This will start the motor 7. However, an electrical current will pass through the resistor 26, the brush 25, conductor 21, contact rod 15, the conductor 16, the bullet 6, the contact member 8, the fuse 11 and the contact 12 to the body and to the ground.

The current passing through the fuse 11 will ignite the charge 10 and the bullet 6 will be fired. With the switch 49 closed the motor 33 will continue the rotation of the shaft 35 and the spool 23 winding up the conductor 21, and continue the movement of the sliding contact 18. As the contact moves between the spaced contacts 15 the gun is inoperative but, when the brush of the sliding contact comes into contact with the next succeeding contact rod 15 above, the corresponding bullet 6 will be fired and this procedure is repeated until all of the bullets are fired and the sliding contact 18 reaches the lever 37 and disengages the spool 23 from the clutch 36. This will

prevent the conductor 21 from being broken should the switch 49 at the surface not be opened.

From the foregoing it is evident that as many bullets may be fired as desired.

If the body 1 is composed of a number of sections screwed, or otherwise secured, together it is essential that the bore 13 of the various sections be perfectly aligned with the bores of adjacent sections so that there will be a continuous smooth guide in which the sliding contact 18 may move. In this connection it is to be noted that the flanges 19 of the sliding contact 18 should be slightly flexible so that they will readily pass the ends of the contact rods 15 which project into the bore 13.

In the embodiment illustrated in Figure 5 there are two bores 13a which are oppositely arranged and which are connected at their upper and lower ends.

These bores extend longitudinally through the body 1a. In this embodiment the lower spool 31 is eliminated and there are two upper pulleys 22a, 22a and two lower pulleys 30a and 30a over which the conductor 21a passes, said conductor being wound about the upper spool 23a and in this embodiment being uninsulated. The spool 23a is provided with a band 24a, of copper or other conducting material, which is electrically connected with the ring 24 and with which the conductor 21a is in constant contact. In other respects the embodiment illustrated in Figure 5 is the same as that shown in Figure 2 except that the brush 20 is reversed by reversing the direction of the motor 12. In Figures 6 and 7 there is illustrated another type of sliding contact wherein the body 50 is composed of insulating material and is preferably shaped to conform to the shape of and to fit within the bore 13. In one side of this body there is a longitudinal groove 51 in which an outwardly bowed leaf spring 52 is located with its ends suitably secured to said body 50. The spring 52 is connected to the core of the conductor 21. The length of the body 50 is slightly greater than the distance between any two successive contact rods 15 so that the inner end of one of said rods is always engaged in the groove with the result that this type of sliding contact is permanently guided. As this sliding contact moves along the bore 13 the spring 52 makes contact successively with the contact rods 15 and fires the corresponding charges. Attached to the lower end of the body 50 there is a wire, or cord, 53 which is wound on the spool 31 in the same identical manner, as is shown in Figure 2 and described in connection with said figure.

It may be here stated that another method of guiding the body 50 would be to form the bore 13 polygonal in cross-section and correspondingly shaping the body 50 so that it cannot turn relative to the contact 15.

As illustrated in Figure 2 the motor and reduction gearing together with the spool 23 are located in the same housing, or head, 46. With an assembly of this type each gun perforator would have to be provided with its own motor and gear box. In some instances it may be desirable to assemble the motor and gear box in their own housing forming the head of the gun perforator, so that it may be easily attached to the body of the gun perforator itself by any selected type of coupling. This arrangement would permit the use of the same head with various gun bodies so that when it becomes necessary to repair or reload a body the head containing the motor and gearing could be attached to another body.

The drawings and description are illustrative merely while the broad principle of the invention will be defined by the appended claims.

What I claim is:

1. In a gun perforator the combination of a gun body adapted to be lowered into a well and having a longitudinal bore extending substantially from end to end thereof, electrical circuits in the body, contact rods in, and insulated from, the body and extended into the bore and connected with the respective circuits, said rods being spaced along the bore substantially from end to end thereof, a sliding contact member in the bore having means thereon which insulates it from the body and having electrical contact means thereon arranged to successively come into contact with said rods, a source of electrical energy connected to said contact means and to said circuits, means for moving said sliding contact member along said bore.

2. In a gun perforator the combination of a gun body adapted to be lowered into a well and having a longitudinal bore extending substantially from end to end thereof, electrical circuits in the body, contact rods in, and insulated from, the body and extended into the bore and connected with the respective circuits, said rods being spaced along the bore substantially from end to end thereof a sliding contact member in the bore having means thereon which insulates it from the body and having electrical contact means thereon arranged to successively come into contact with said rods, a source of electrical energy connected to said contact means and to said circuits and electrically driven means under the control of an operator for moving the contact member along said bore.

3. In a gun perforator the combination of a gun body adapted to be lowered into a well and having a longitudinal bore which extends substantially throughout the length of the perforator, radial gun barrels in the body and spaced apart substantially throughout the length of the perforator, projectiles in the barrels, explosive charges behind the projectiles, electrical circuits in the body formed with filaments associated with said charges, contact rods insulated from the body and extended into the bore and connected with said respective circuits, a contact member movable in said bore and including guide means insulating it from the bore walls and a contact arranged to electrically connect with said rods, a source of electrical energy connected to said contact member and to said electrical circuits, mechanical means for moving the contact member to initial position and electrically driven means, under the control of an operator, for moving said contact member along said bore throughout the length thereof.

4. In a gun perforator the combination of a gun body adapted to be lowered into a well and having a longitudinal bore, radial gun barrels in the body, projectiles in the barrels, explosive charges behind the projectiles, electrical circuits in the body formed with filaments associated with said charges, contact rods insulated from the body and extended into the bore and connected with said respective circuits, a contact member movable in said bore substantially throughout the length of the tool and including guide means insulating it from the bore walls and a contact arranged to electrically connect with said rods, a source of electrical energy connected to said contact member and to said electrical circuits and electrically driven means under the control of an

operator for moving the contact member along said bore.

5. In a gun perforator the combination of a gun body adapted to be lowered into a well and having a longitudinal bore, electrical circuits in the body, contact rods in, and insulated from, the body and extended into the bore and connected with the respective circuits, a sliding contact member in the bore having means thereon which insulates it from the body and having electrical contact means thereon arranged to successively come into contact with said rods, a source of electrical energy connected to said contact means and to said circuits, mechanical means for moving said contact member to initial position and electrically driven means under the control of an operator for moving said contact member along the bore into successive contact with said contact rods.

6. In a gun perforator the combination of a gun body adapted to be lowered into a well and having a longitudinal bore, electrical circuits in the body, contact elements in, and insulated from, the body and extended into the bore and connected with the respective circuits, a sliding contact member in the bore having means thereon which insulated it from the body and having electrical contact means thereon arranged to successively come into contact with said elements, a source of electrical energy connected to said contact means and to said circuits, mechanical means for moving said contact member to initial position and electrically driven means under the control of an operator for moving said contact member along the bore into successive contact with said contact elements.

7. In a gun perforator the combination of a gun body adapted to be lowered into a well and having a longitudinal bore extending substantially throughout the length of the tool, electrical circuits in the body, contact elements in, and insulated from, the body and extended into the bore and connected with the respective circuits and arranged along the bore substantially from end to end thereof, a sliding contact member in the bore having means thereon which insulates it from the body and having electrical contact means thereon arranged to successively come into contact with said elements, a source of electrical energy connected to said contact means and to said circuits, means for moving said sliding contact member along said bore and means to maintain the contact member against rotation in the bore.

PAUL CHARRIN.

REFERENCES CITED

The following references are of record in the file of this patent:

UNITED STATES PATENTS

Number	Name	Date
2,142,583	Yarbrough	Jan. 3, 1939
2,192,591	Alexander	Mar. 5, 1940
2,210,192	Turechek	Aug. 6, 1940
2,212,045	Ridley	Aug. 20, 1940
2,317,238	Mennecier	Apr. 20, 1943