J. H. MORGAN.

APPARATUS FOR DISCHARGING STATIC CHARGES.

APPLICATION FILED APR. 21, 1917.

1,394,211. Patented Oct. 18, 1921.

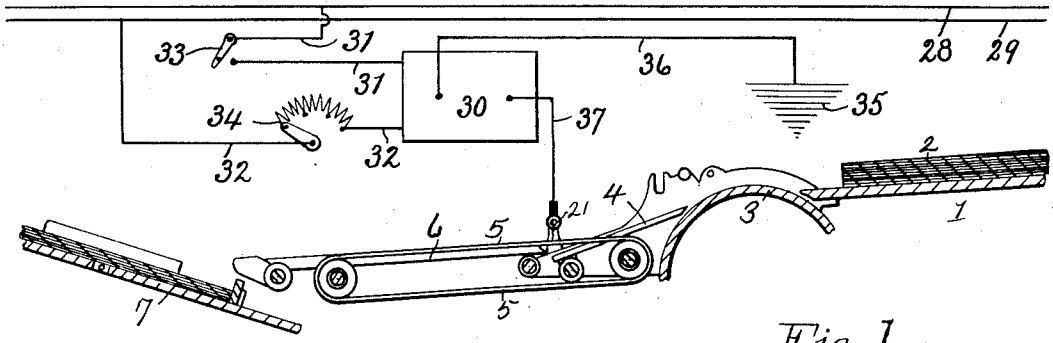

Fig. 1.

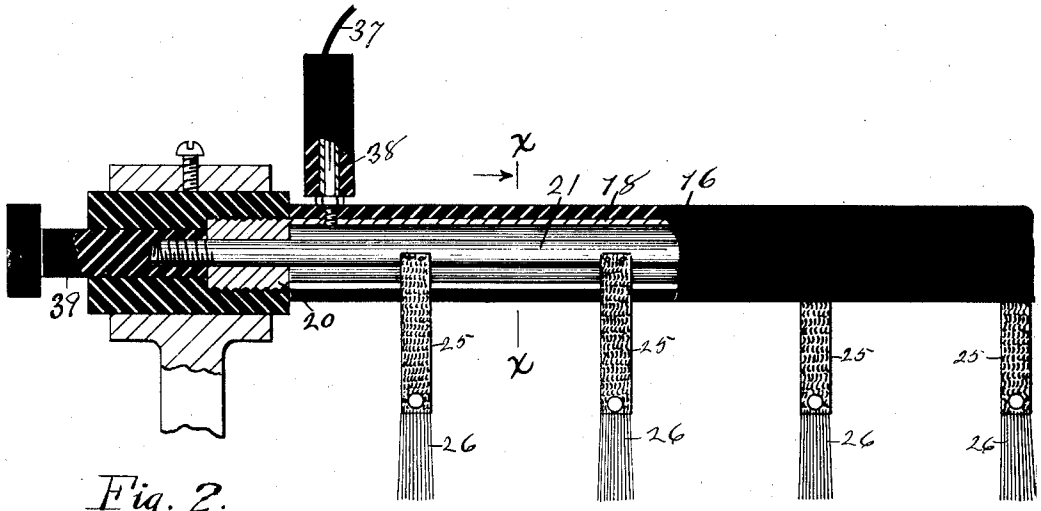

Fig. 2.

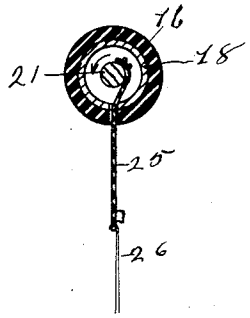

Fig. 3.

INVENTOR.

John H. Morgan

BY Allen Webster

ATTORNEY.

UNITED STATES PATENT OFFICE.

JOHN H. MORGAN, OF HOLYOKE, MASSACHUSETTS, ASSIGNOR OF ONE-THIRD TO BERTHA WEBSTER, OF SPRINGFIELD, MASSACHUSETTS, AND ONE-THIRD TO CHARLES W. HUNTLEY, OF HOLYOKE, MASSACHUSETTS.

APPARATUS FOR DISCHARGING STATIC CHARGES.

1,394,211. Specification of Letters Patent. Patented Oct. 18, 1921.

Application filed April 21, 1917. Serial No. 163,594.

To all whom it may concern:

Be it known that I, JOHN H. MORGAN, a citizen of the United States of America, and resident of Holyoke, in the county of Hampden and State of Massachusetts, have invented new and useful Improvements in Apparatus for Discharging Static Charges, of which the following is a specification.

My invention relates to means for discharging charges of static electricity from materials of any kind and especially from paper.

For the purpose of illustrating my invention I show its application to paper and for the purpose of this illustration and exemplification I show its employment in connection with a flat-bed printing press.

In the accompanying drawings, in which I have elected to illustrate one exemplification of my invention—

Figure 1 is a longitudinal section of the upper portion of an ordinary flat-bed printing press, equipped with my apparatus, and showing connected therewith in diagrammatic form the wiring for the purpose of bringing in an electric current.

Fig. 2 is a side view on an enlarged scale, with a part in section, of the adjustable conductor, and,

Fig. 3 is a sectional view through line x—x of the same.

The construction and operation will be readily understood on reference to the drawings in connection with the following description.

In this illustration of the application and carrying out of my invention I show in Fig. 1 an ordinary feeding table 1 of a flat-bed printing press having supported thereon a pile of sheets of paper 2. These sheets are fed to the cylinder 3 and after receiving the printing impression move down the incline 4 and are delivered on the tapes 5, and after being carried the requisite distance by the tapes are taken up by the fly-sticks 6 and thence delivered to the receiving table or platform 7.

During the travel of the paper from the feeding or supply table to the delivery or receiving platform it is brought into contact with electrical conductors, hereinafter described, which remove or discharge from paper any static electricity which may accumulate therein.

I prefer that the contact be made after the sheet has passed the printing cylinder and before it reaches the delivery platform.

The electric energy employed by me to accomplish the desired result and by me considered the best, comprises a source of induced current.

In Fig. 1 I illustrate the wiring, the wires 28 and 29 indicating the main supply wires and 30 illustrating a source of induced current, it being in electrical connection with the main live wires through wires 31 and 32, a switch 33 being interposed in wire 31 and means to control the current, such as a rheostat 34, being interposed in the line 32.

A wire 36 leads from the secondary wire of the source of induced current to a grounding 35 and another wire 37 leads from the secondary coil of said source of induced current toward and is in electric connection with the rod or conductor 21, this wire by preference being in connection with the shell or tube in which the rod 21 is mounted and suitable electrical connection being made between the two. The machine is grounded as a matter of course.

The voltage is controlled by the operation of the rheostat 34. This is advantageous in apparatus of this character because of the fact that the condition of the material, the atmospheric conditions, temperature saturation of the atmosphere and other varying conditions frequently affect the material and the static electricity found therein or thereon or associated therewith, so that it is desirable that the voltage be capable of control and variation to meet the different conditions existing at different times.

In my apparatus the main current is converted into an induced current which is the current necessary in order to produce the desired result.

For the purpose of making contact with the upper surface of the material I prefer to employ flexible conductors, preferably formed of copper or other good conducting material and prefer that they be of chain construction and made thin and flat similar to that illustrated in Fig. 6, and I prefer that the end portions of these conductors be provided with light wire fringes 26 so that the contact of these conductors with the paper will be so light and delicate that danger of smearing a freshly printed page

will be avoided. As it is desirable that these members be adjustable to provide for varying conditions which might result from paper or other material of different thicknesses or difference in speed of travel, I prefer to mount these conducting elements upon a rod 21, which rod is adapted to be rotated so as to raise or lower and thus adjust the conductors 25 as conditions may require. I prefer that the rod 21 be mounted in a tube 18 and that it be provided with an insulating covering 16. A longitudinal slot is provided in the tube and its covering through which the conductors 25 depend as shown most clearly in Fig. 7. The rod 21 is mounted at both ends in suitable bearings in insulating material and the tube 18 is either solid or is provided with a metal plug 20 at one end through which portion the rod 21 extends, thus insuring a good contact and the passage of the current through the tubular member 18 to the rod 21 and thence to the conductors 25. A suitable post 38 is mounted on the tube 18 with which post the wire 37 from the secondary coil of the induction coil is electrically connected. A suitable knob or handle, 39 is provided at one end so that the rod 21 may be rotated to the desired degree thus raising or lowering the conductors 25 as heretofore explained.

The flexible woven or chain wire conductors are as well adapted to be employed as gathering elements when the free end is in the static field as to be employed as before described as conductors to carry a current of electricity into the material. In both instances it is very desirable that these flexible conductors be provided with delicate metallic fringe members at the end so that when in contact with a freshly printed page the ink will not be affected or spread, consequently the page will not be soiled by the employment of this character of conductor whether it be used for the purpose of gathering static electricity or as a conductor of positive electricitv to the material, and if the ends of these brush members are not in contact with the material they are found more serviceable than if the ends were not provided with the delicate fringe referred to.

While I have illustrated and described my invention or discovery as applied to moving paper it may also be applied to any moving material and also to material at rest.

Having therefore described my invention what I claim is new and desire to secure by Letters Patent is:

1. In an apparatus for discharging static charges from material, an outer and inner tube one of which is of insulating material and the other of conducting material, a rotatable conducting rod within the inner of said tubes, means to rotate said rod, and conductors extending from said rod toward said material.

2. In an apparatus for discharging static charges from material, an insulating tube adapted to be connected to a source of current, a conducting tube within said insulating tube, a rotatable conducting rod within said second-named tube, means to rotate said rod, and conductors extending from said rod toward said material.

3. In an apparatus for discharging static charges, the combination of an insulating tube, a conducting tube within said insulating tube, a rotatable conducting rod within said second-named tube, means to rotate said rod, and flexible conductors mounted on said rod, substantially as shown.

4. In an apparatus for discharging static charges, the combination of a slotted insulating tube, a slotted conducting tube within said insulating tube, a rotatable conducting rod within said second-named tube, the latter having a bearing at each end for said rod, means to rotate said rod, and flexible conductors mounted on said rod and extending through the slots in said tubes, substantially as shown.

JOHN H. MORGAN.