June 6, 1933. S. T. WILES 1,912,560

REFRACTORY LINED HOLLOW ELECTRODE

Filed June 2, 1930

FIG. 1.

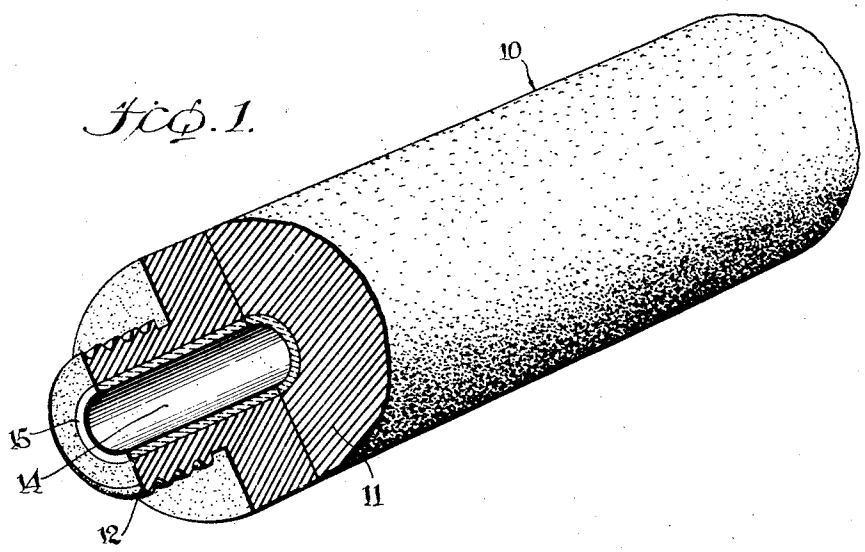

FIG. 2.

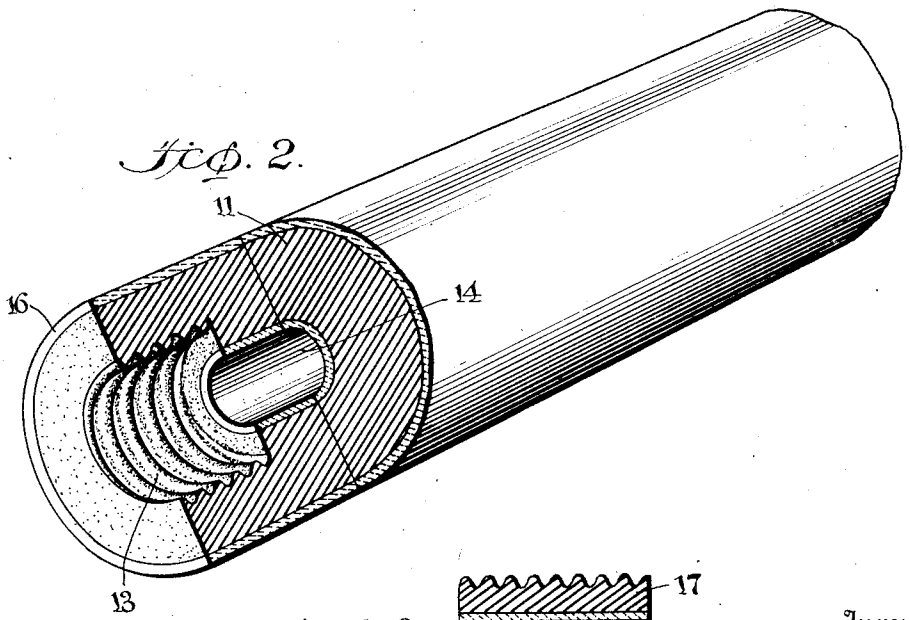

FIG. 3.

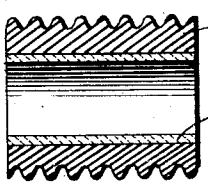

Inventor
Sydney T. Wiles,

By Barton A. Bean Jr.
Attorney

Patented June 6, 1933 1,912,560

UNITED STATES PATENT OFFICE

SYDNEY T. WILES, OF BUFFALO, NEW YORK, ASSIGNOR TO BUFFALO ELECTRIC FURNACE CORPORATION, OF BUFFALO, NEW YORK

REFRACTORY LINED HOLLOW ELECTRODE

Application filed June 2, 1930. Serial No. 458,979.

This invention relates to electrodes, and more particularly to hollow electrodes having refractory linings.

In the preparation of certain metals or metalliferous products, a method of reduction of the ore and extraction of the metallic products therefrom depending upon the propagation of the chemical reducing action during the passage of a mixture of ore and reducing agent through horizontally disposed carbon electrodes, and the passage of the finished product through an electric arc formed at the end of these electrodes, was disclosed in a copending application, Serial No. 374,251, filed June 27, 1929.

In the working of this process, a cold mixture of the finely ground and intimately admixed charge is fed into one end of the hollow electrode, is passed therethrough, being heated by radiation and convection from the electrode and by electrical resistance during this passage, whereby chemical reactions are initiated and endothermic reductions occur with production of metallic products which fall from the end of the electrode through the arc and into the molten bath in the hearth beneath.

In the production of certain metalliferous products, notably ferro-manganese, ferro-chromium, premium grades of pig iron, etc., the carbon content of which should be held within certain definite and specified limits, and in most cases, is desirably the least possible amount attendant upon the process of manufacture, undue contact with carbon is undesirable.

In the process mentioned above, metalliferous reduction products are formed in hollow electrodes in contact with the graphite of the electrodes and may absorb carbon therefrom, thus producing a product with a higher carbon content than would normally be produced from the composition of the mixed charge. It is, therefore, desirable to minimize, insofar as possible, any contact between the carbon electrodes and the reduced metallic product.

During the production of certain metallic products, these products, in contact with the carbon of the electrodes, act upon the carbon and leave the interior surface of the electrodes in a pitted and corroded condition. This condition prevents free and unimpeded motion of the charge through the electrode, and permits of the formation and collection of free metallic materials in the electrodes, whereby excessive contamination with carbon occurs.

The present invention has as an object the provision of an electrically conducting tube or electrode suitable for use as a feeding as well as heating device in connection with certain types of electric furnace operation. It further provides an electrode through which mixtures of ore and reducing agents may be passed without contact of the finished metallic product with carbon other than that calculated and used as a reducing agent in the charge, or with carbon adventitiously placed in the lining of the electrode, and therefore with a consequent control of the carbon content in the final metallic product. There is also provided a hollow electrode having interior and exterior coatings of refractory material, thus decreasing the wear and attrition upon the interior core of the electrode and preserving the life thereof, and reducing the amount of heat lost by conduction and radiation from the exterior of the electrode.

The drawing appended hereto shows in Fig. 1 a perspective view of an interiorly coated electrode with certain parts cut away;

Fig. 2 shows another type of electrode in perspective with parts broken away to indicate more clearly the exterior and interior linings.

Fig. 3 is a sectional view of a connecting electrode portion.

Fig. 1 shows a detailed delineation of an electrode 10 which is, for the most part, of an electrically conducting material, such as carbon or graphite, which portion is designated as 11. The general size and dimension of the electrode being dependent wholly upon the service which it is to render, suffice it to say that in general, the length of the electrode is materially greater than the diameter thereof. In the manufacture of the finished electrode, the shape, size and hardness are determined by its subsequent use. It is, however,

provided with attaching means 12 whereby additional lengths of electrodes may be added in electrically conducting relation as the electrode material is worn away and shortened, consequent to its use. The attachment may be of the type indicated, although other well known forms have been used, that is the provision of a threaded male portion 12 at one end of the electrode and a female threaded portion 13 at the other end for reception of the first mentioned portion. Another form of attachment by which additional length of electrode may be connected is shown in the threaded connecting portion 17 which is screwed into interiorly threaded portions 13 at either end of the electrode. An electrode portion of average type will be approximately five feet in length and have a diameter of from twelve to eighteen inches with an aperture 14 axially longitudinally of the electrode of three to four inches; the diameter of this axial passage depending upon the quantity of current passing through the electrode, upon its diameter therefore, and upon the bulk of the material to be passed therethrough.

To prevent undue contact of charged material and end products of the reaction, which in most cases consist of molten or spongy metal, the interior portion of the hollow electrode is provided with a refractory lining 15 which is substantially nonreactive with respect to the constituents of the charge and with respect to the products of the chemical reaction occurring as the charge progresses from the cold end of the electrode to the heated end. The chemical nature of this refractory material is adapted to the particular type of chemical reaction occurring within the electrode, the temperature attained, and the corrosive action of the slag or metal produced therein.

The various types of linings for the carbon electrode are those which have been advantageously used heretofore in metallurgical operations; they the the "acid", "neutral", and "basic". That is to say, with certain types of reactive mixtures, burned magnesite, or calcined dolomite, possess very desirable properties as basic linings where such are found necessary, and function as chemical reagents whereby certain injurious and deleterious products, otherwise tending to remain in the metallic end products, are removed. Among the neutral lining materials may be mentioned chromite which has been found to be a desirable lining due to its resistance, both to heat and chemical reactions. Refractory fire clays have also been advantageously used, as have silicious linings where conditions require an acid lining.

The method by which these linings are placed within the interior wall of the hollow electrode consists essentially of three steps; in the first place, the ground lining is mixed with a binder, such as tar, or silicate of soda; secondly, this pasty mass is tamped upon the walls of the electrode to the desired thickness; and thirdly, the plastic lining hardened by a process depending upon the type of lining used, which process is in general a heating and conditioning process.

The hollow electrode is mounted axially upon a core member of sufficient diameter that the outside surface of the core is spaced from the inner wall of the hollow electrode for the reception of the mixture of the refractory substance and binder. The extent of this spacing is variable and entirely dependent upon the thickness and physical properties desired in the lining. It is, however, usually from a quarter of an inch to one inch in thickness. When the fluent mixture of refractory and binder has been tamped between the core member and the inner walls of the electrode, the refractory material is subjected to a heating process, which process may be performed after the removal of the core, or, where the core is metallic, by heating the core while still in the electrode.

Where a moderately good conductor is desirable as a lining, the refractory material is mixed with tar or molasses, or similar viscous and carbonaceous material, which upon pyrolysis decompose with the liberation of gaseous materials and deposition of a hard conducting carbon as a binder forming a coherent lining. Where a non-conducting lining is found desirable, an inorganic binder, such as sodium silicate may be used efficaciously, as it will flux and cement the constituents normally found in either acid, basic, or neutral refractories.

Under certain operating conditions, an exterior lining or facing 16 of refractory has been found to be desirable as the heat conductivity of this facing is considerably less than that of the graphite electrode itself, and where such electrode has been coated, heat losses from the furnace by way of the electrode are materially decreased.

The exterior facing or coating of refractory upon the electrode is formed by placing the electrode in a cylindrical mold spaced from the electrode at a distance equal to the desired thickness of the refractory coating, packing and tamping the fluent refractory between the mold member and the electrode, and thereafter subjecting the coating to a heating or baking process, thus producing a refractory facing completely surrounding the electrode.

The casing or mold member may be removed prior to the heating or may be made a portion of an electrical circuit and heat added to the coating material by heating the metallic mold member, thereby fluxing and hardening the refractory facing.

The finished electrode as illustrated in Fig. 2 contains therefore inner and outer

concentric tubes of refractory material, 15 and 16 respectively, with an intermediate conducting electrode portion 11 therebetween. The outer casing serves essentially as a heat economizer as it prevents excessive radiation of heat from the graphite portion of the electrode. The inner tube, on the other hand contains a carbonaceous binder and permits the flow of heat from the electrode portion to the charge, preserves the electrode portion from excessive wear from attrition of the moving charge, and prevents contact of the metallic end products of the reduction with undue amounts of carbon, and thereby tends to reduce the final carbon content of the metallic product.

What I claim is:—

1. An oblong electrode having a charge receiving opening extending axially therein for reduction of the charge as it moves through the electrode, and an electrically conducting coating of refractory material on the inner surface of the electrode to provide a smooth guideway for the moving charge and to prevent wear on the electrode by the charge as it passes through the latter.

2. An oblong electrode having a charge receiving opening extending axially therein for reduction of a reactive charge as it moves through the electrode, an electrically conducting coating of refractory material having a carbonaceous binder therein and bonded to the inner surface of the electrode, said coating being substantially non-reactive with respect to the constituents of the charge to minimize carbon pick-up by the moving charge and to minimize wear by attrition.

3. An oblong electrode having a charge receiving opening extending axially therethrough for the reduction of the charge of reactive material when the electrode is heated and as such charge moves through the electrode, an electrically conducting lining of refractory material bonded to the inner surface of the electrode to minimize carbon pick-up by the moving charge and to minimize wear by attrition in the electrode as the charge moves therein, and a coating of refractory material bonded to the outer surface of the electrode and composed of material different from the material of the inner lining whereby the outer coating minimizes the loss of heat from the electrode.

SYDNEY T. WILES.