US 20200165036A1

(19) United States

(12) Patent Application Publication

(10) Pub. No.: US 2020/0165036 A1

(43) Pub. Date: May 28, 2020

Squiers et al.

(54) **STORAGE DEVICE SYSTEM**

(71) Applicant: **Milwaukee Electric Tool Corporation**, Brookfield, WI (US)

(72) Inventors: **Grant T. Squiers**, Cudahy, WI (US); **Matthew Vargo**, Milwaukee, WI (US); **Matthew W. Naiva**, Wauwatosa, WI (US); **George Barton**, Mequon, WI (US); **Christopher S. Hoppe**, Milwaukee, WI (US); **Scott Earl McKinster**, Watertown, WI (US); **Aaron S. Blumenthal**, Wauwatosa, WI (US); **Michael Stearns**, Milwaukee, WI (US); **Michael John Caelwaerts**, Milwaukee, WI (US); **Aaron M. Williams**, Milwaukee, WI (US); **Samuel A. Gould**, Wauwatosa, WI (US); **Steven W. Hyma**, Milwaukee, WI (US); **Jason D. Thurner**, Menomonee Falls, WI (US); **Yaron Brunner**, Kibbutz Gvat (IL)

(21) Appl. No.: **16/777,181**

(22) Filed: **Jan. 30, 2020**

Related U.S. Application Data

(63) Continuation of application No. PCT/US2018/044629, filed on Jul. 31, 2018.

(60) Provisional application No. 62/634,537, filed on Feb. 23, 2018, provisional application No. 62/621,403, filed on Jan. 24, 2018, provisional application No. 62/613,263, filed on Jan. 3, 2018, provisional application No. 62/609,985, filed on Dec. 22, 2017, provisional application No. 62/608,302, filed on Dec. 20, 2017, provisional application No. 62/594,292, filed on Dec. 4, 2017, provisional application No. 62/538,860, filed on Jul. 31, 2017.

Publication Classification

(51) **Int. Cl.**

B65D 25/20	(2006.01)
A45F 3/04	(2006.01)
B65D 21/08	(2006.01)
A45F 3/14	(2006.01)
B25H 3/02	(2006.01)

(52) **U.S. Cl.**

CPC ***B65D 25/20*** (2013.01); ***A45F 3/04*** (2013.01); ***B65D 21/086*** (2013.01); *B62B 3/10* (2013.01); ***B25H 3/02*** (2013.01); *A45F 2003/144* (2013.01); ***A45F 3/14*** (2013.01)

(57) **ABSTRACT**

A storage container with various aspects is described herein. The storage container may have cleats or cleat receptacles to interact with other storage containers and/or accessories. The storage container may also include rails for attachment of various accessories. Some versions of the storage container may further include telescopic uprights connected to a handle. Many of the versions of the storage containers may further include wheels for transporting the storage containers and their contents.

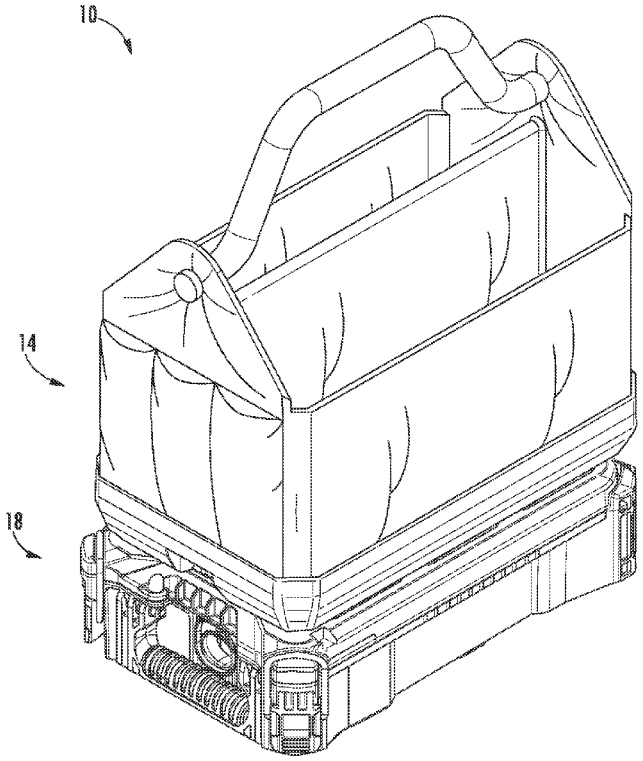

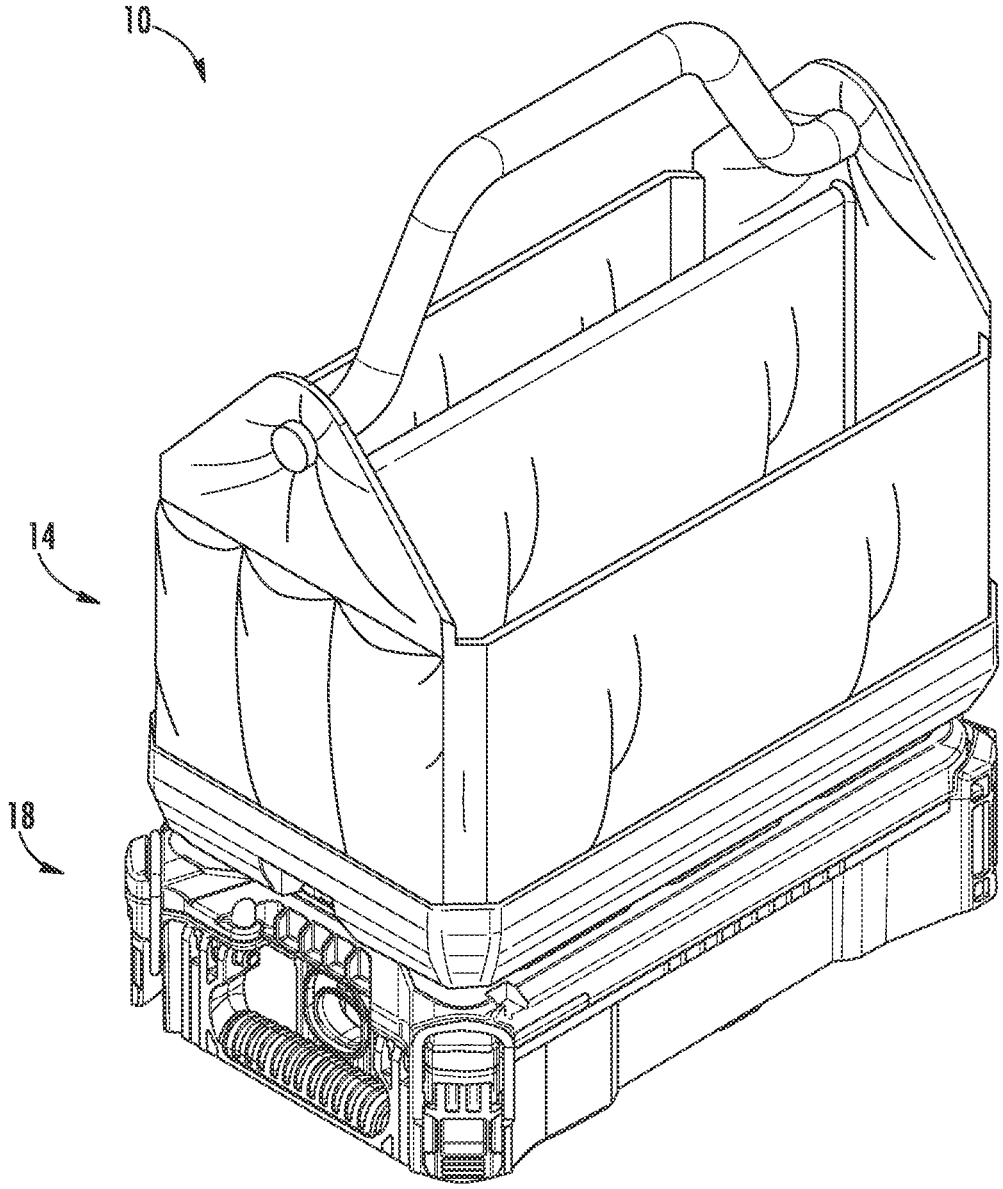

FIG. 1

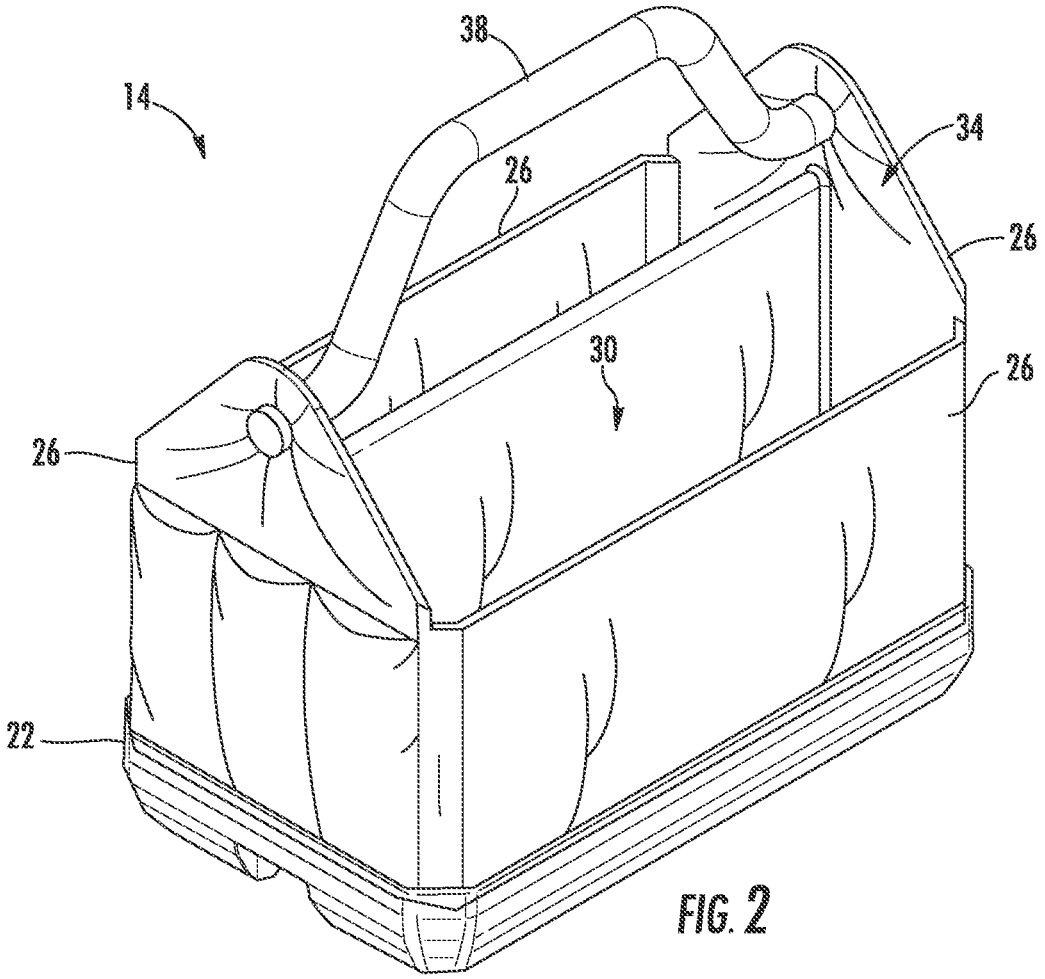

FIG. 2

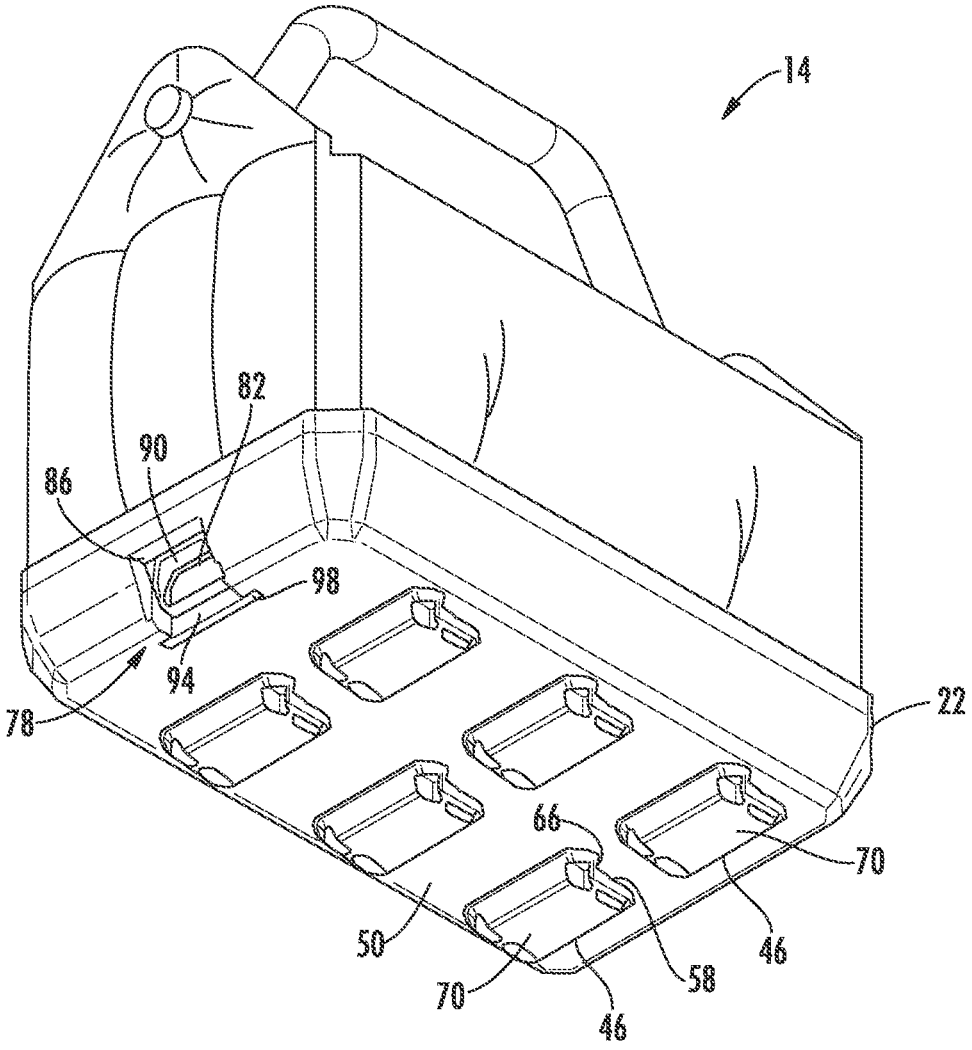

FIG. 3

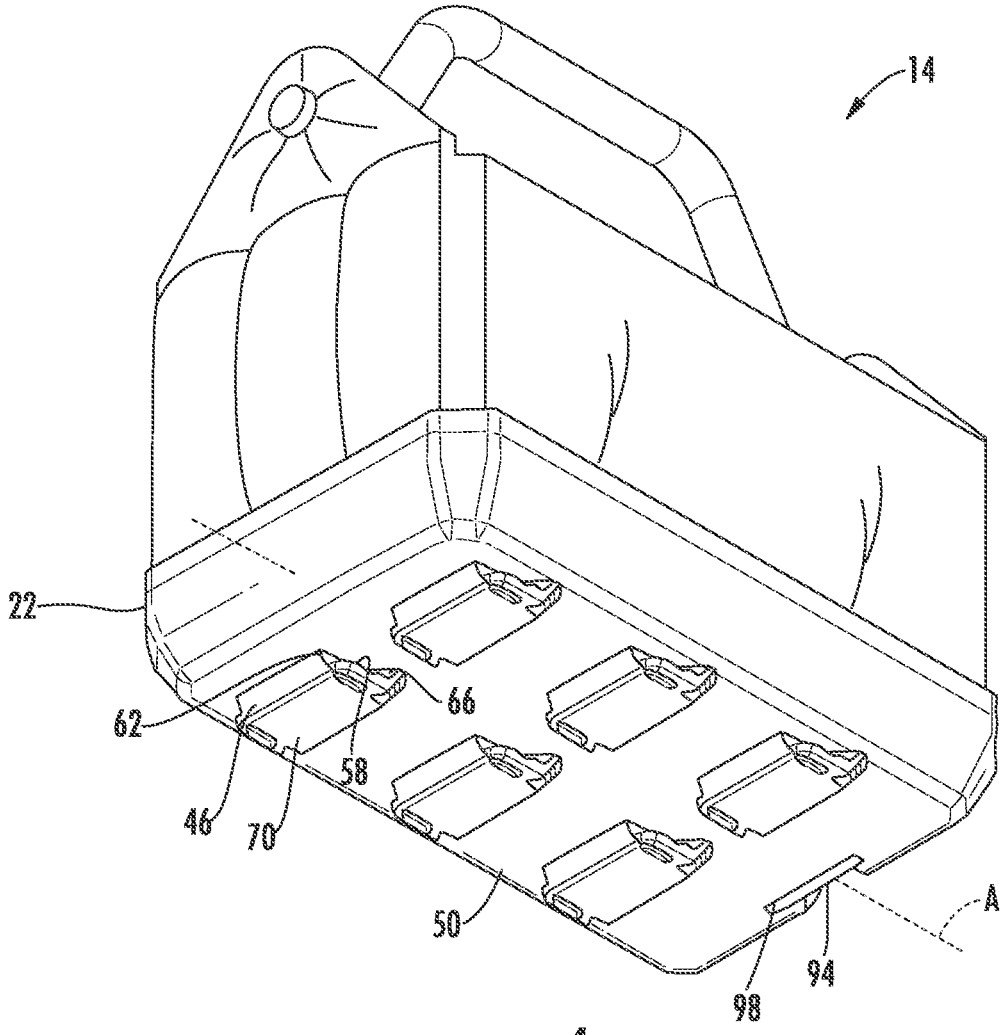

FIG. 4

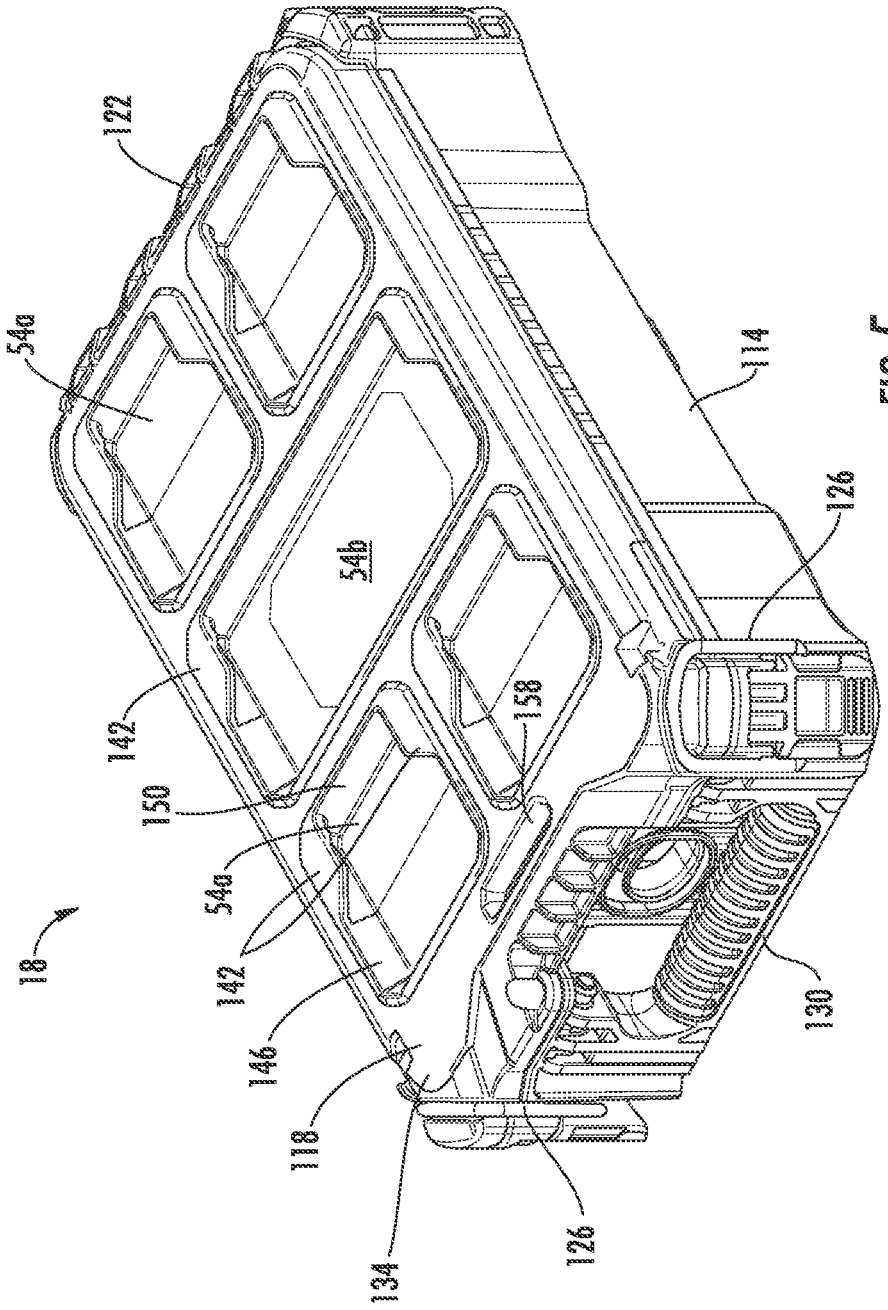

FIG. 5

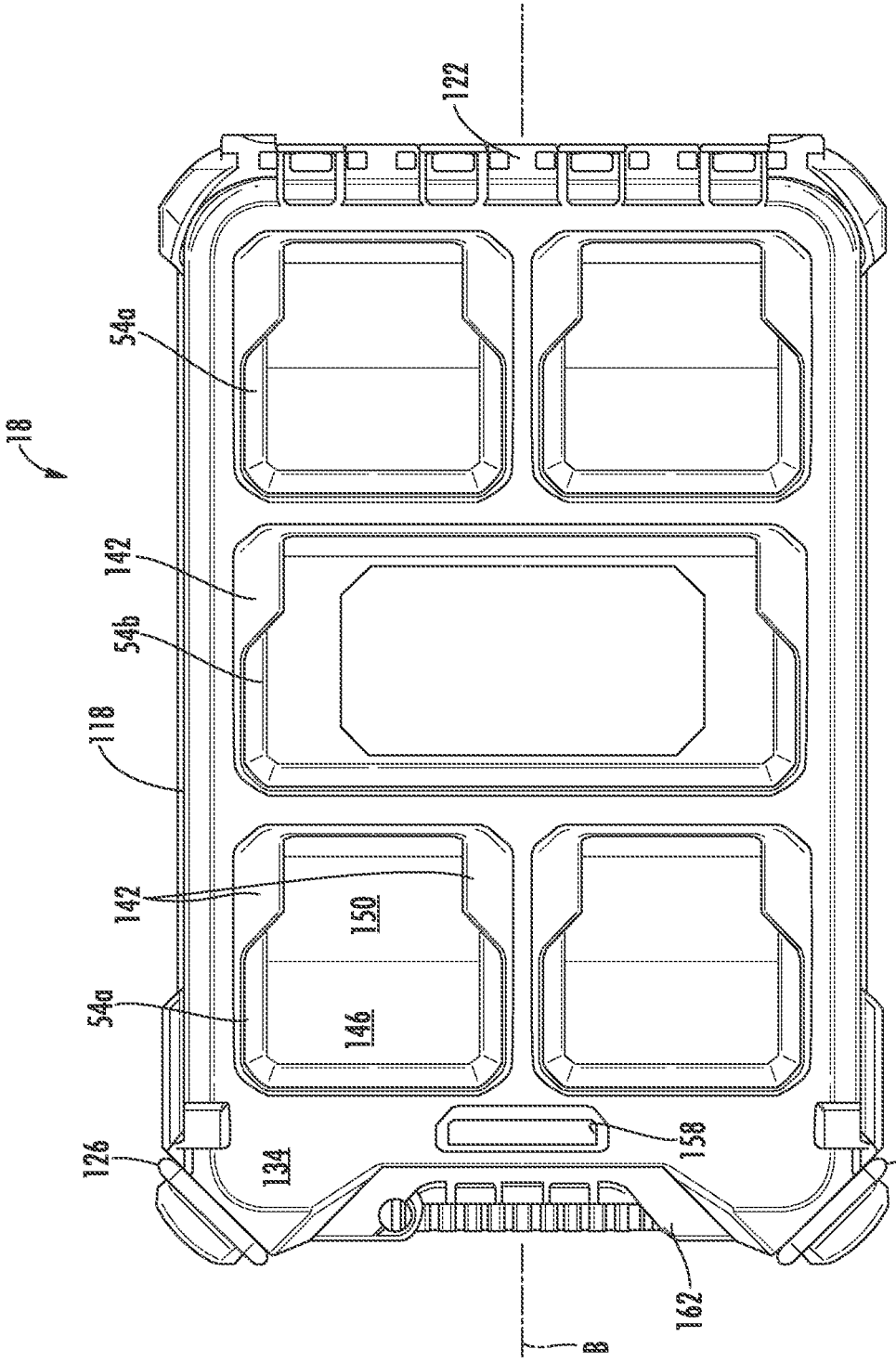

FIG. 6

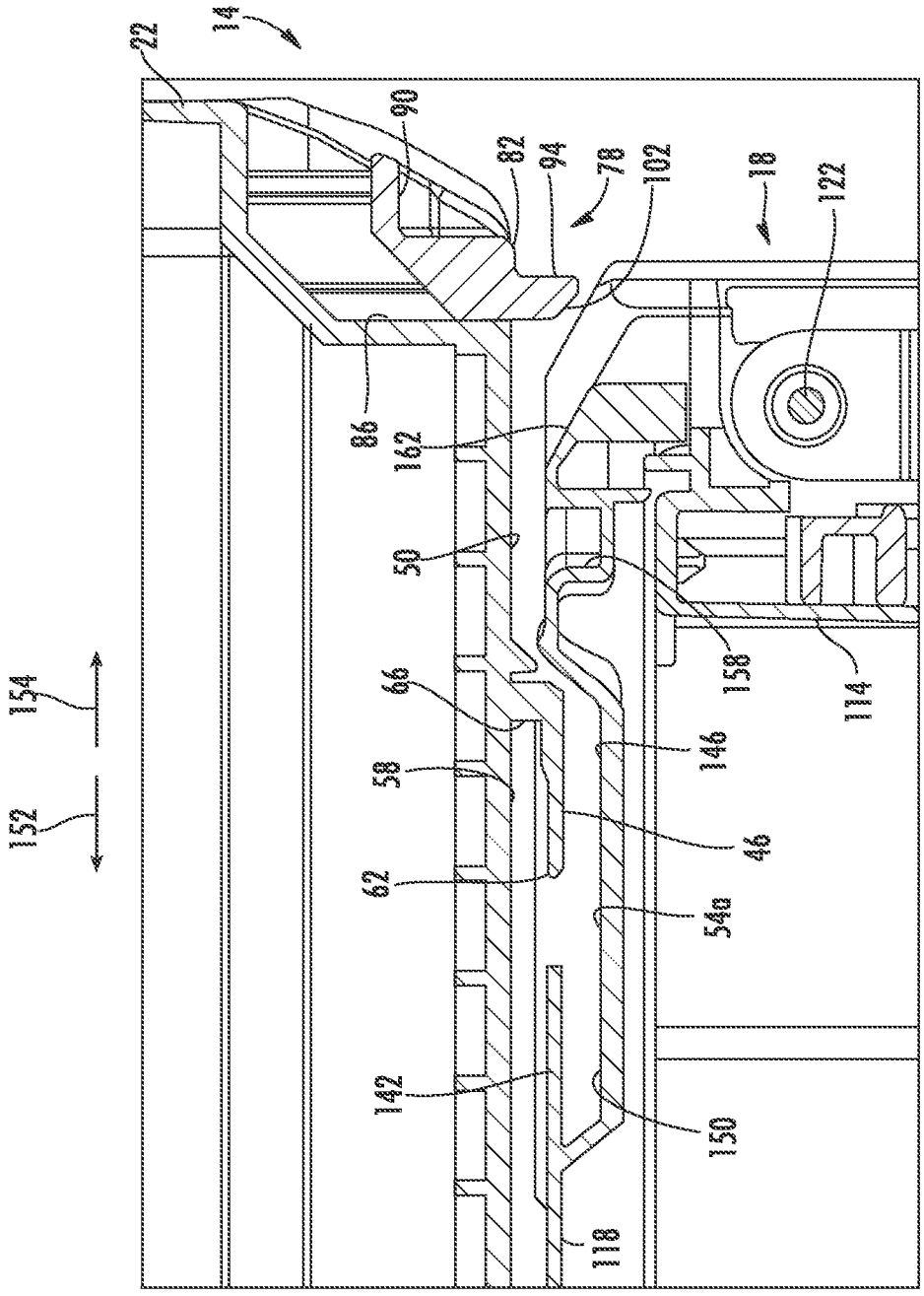
22
14
90
82
94
78
102
18
122
86
162
50
158
114
66
146
58
46
62
54a
142
150
118
154
152

FIG. 7

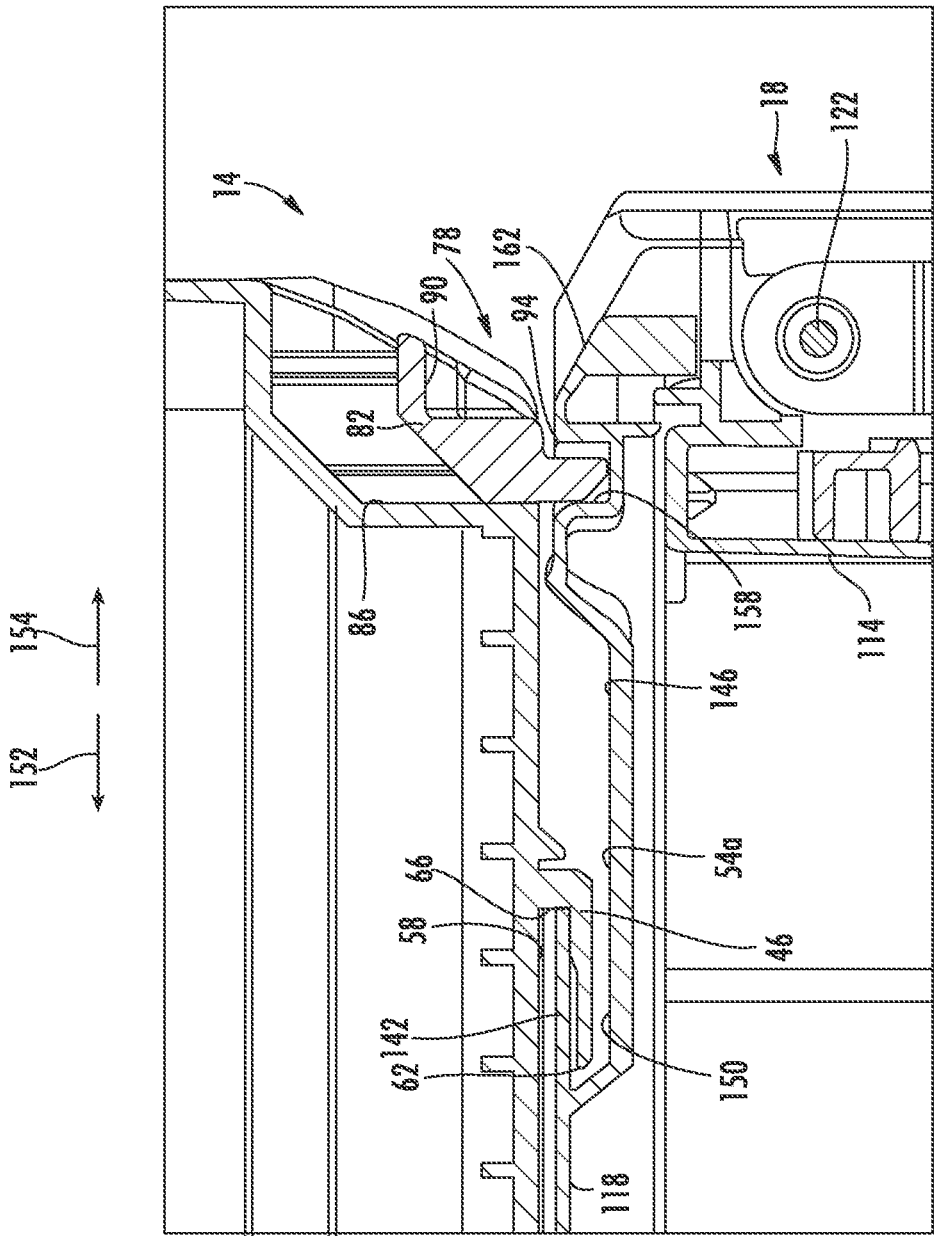
14
18
122
78
162
90
94
82
86
158
114
146
54a
66
58
46
142
62
150
118
154
152

FIG. 8

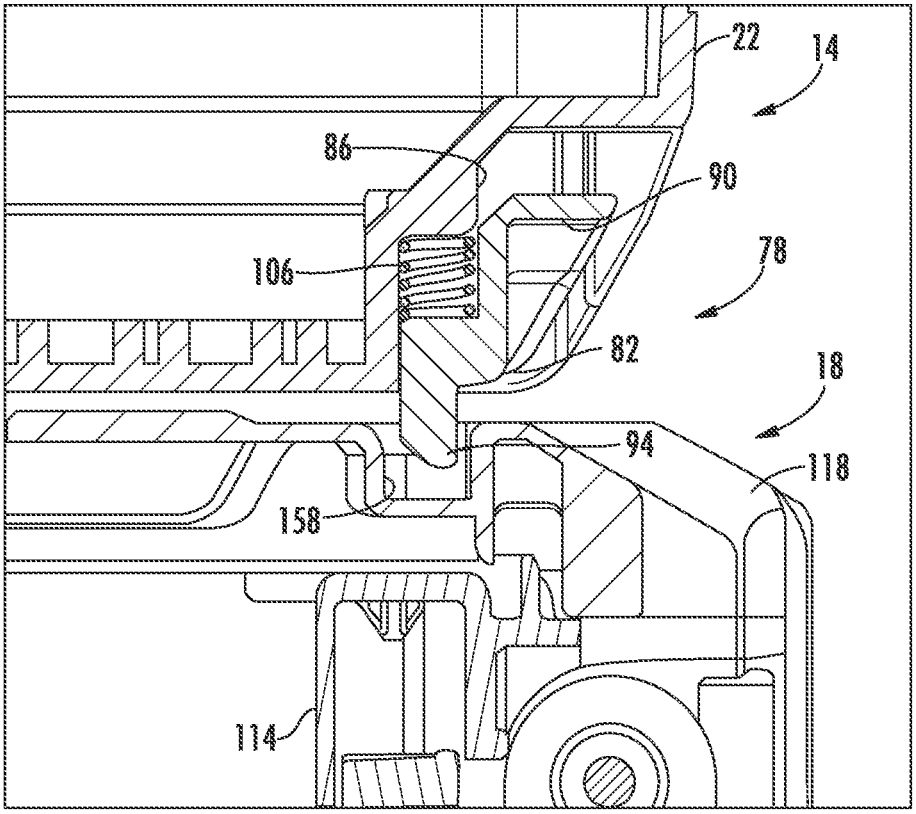

FIG. 9

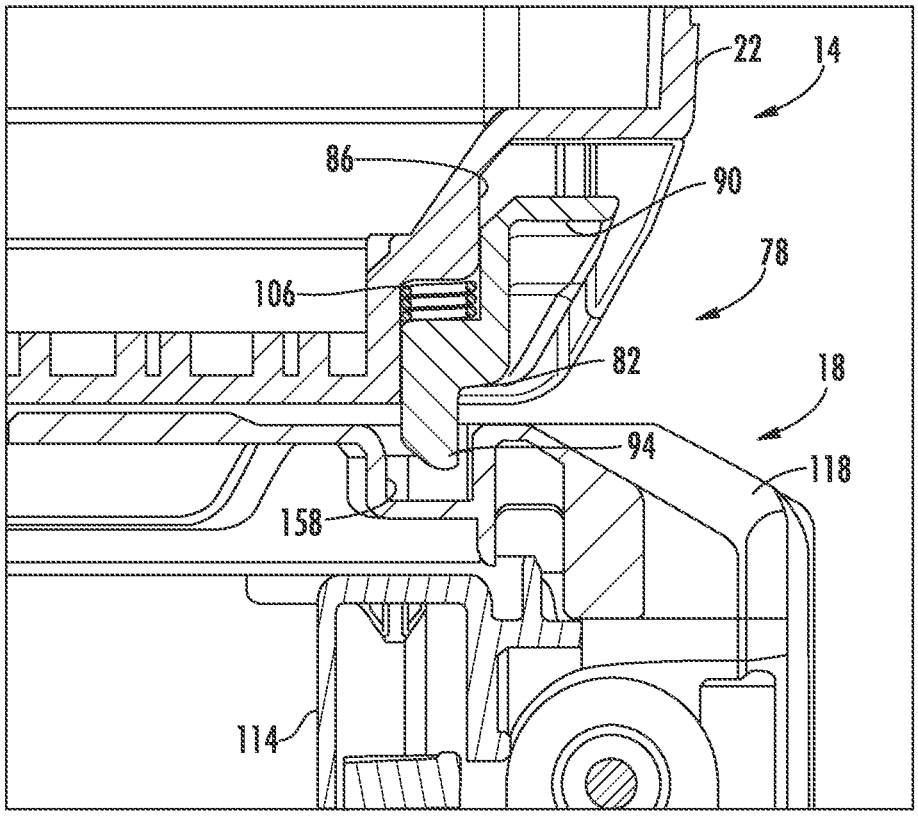

FIG. 10

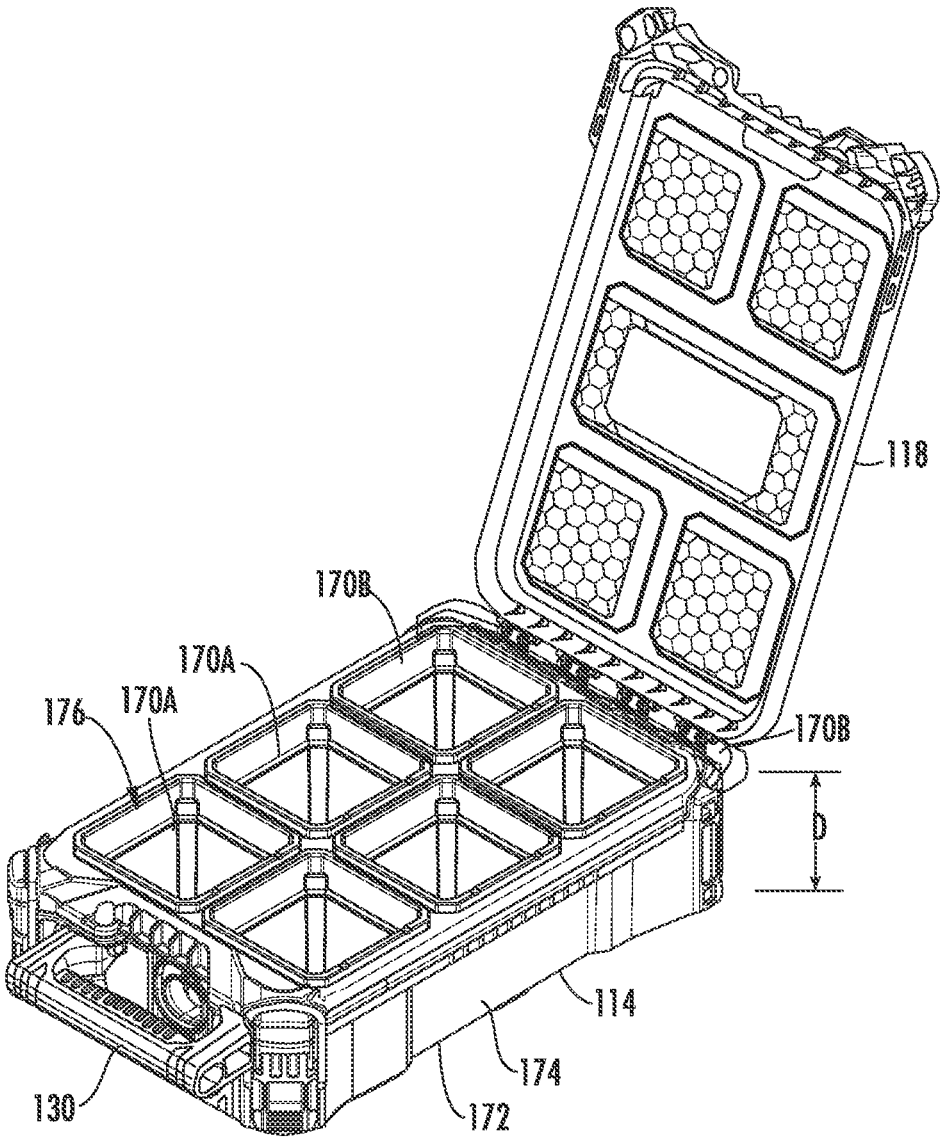

FIG. 11

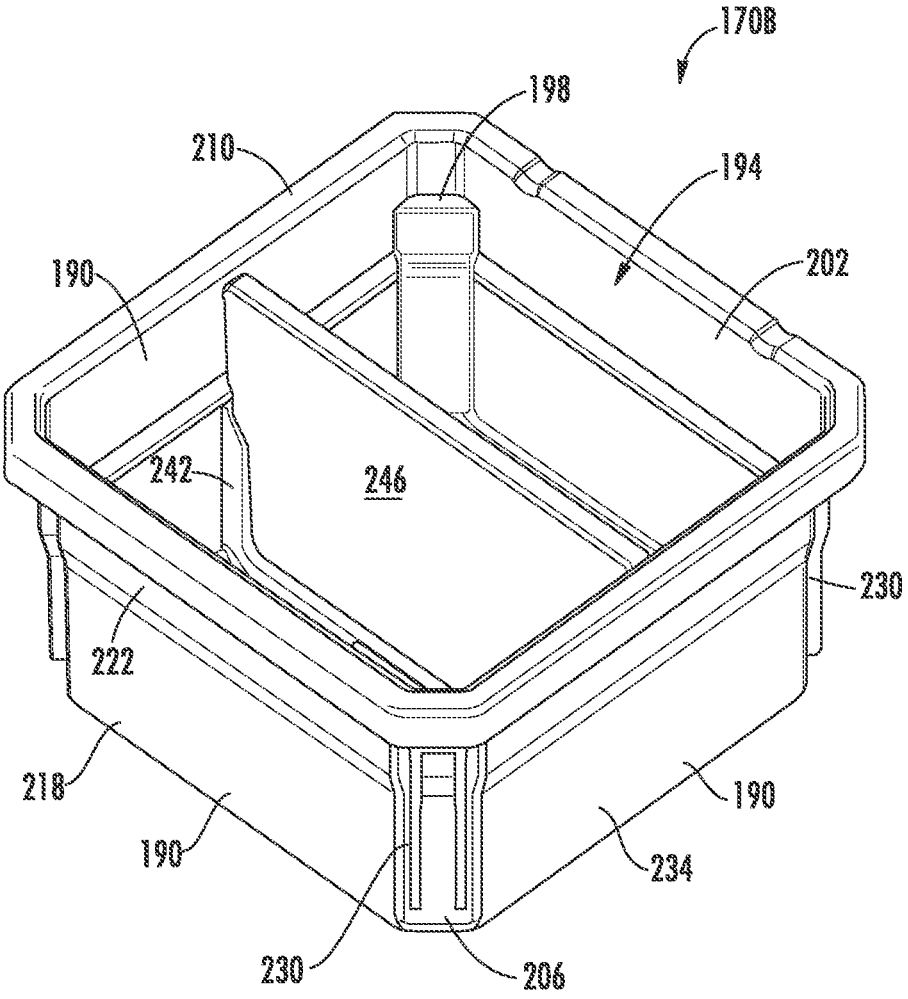

FIG. 12

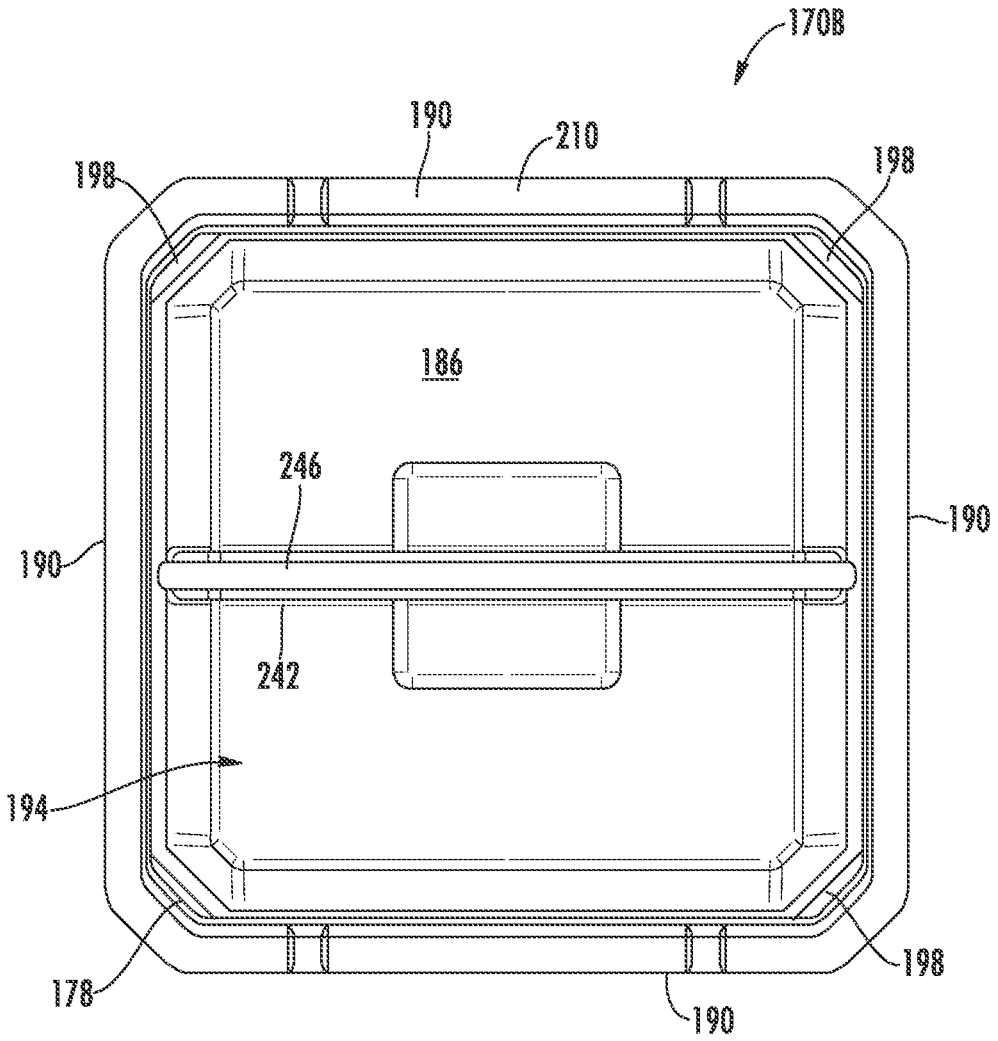

FIG. 13

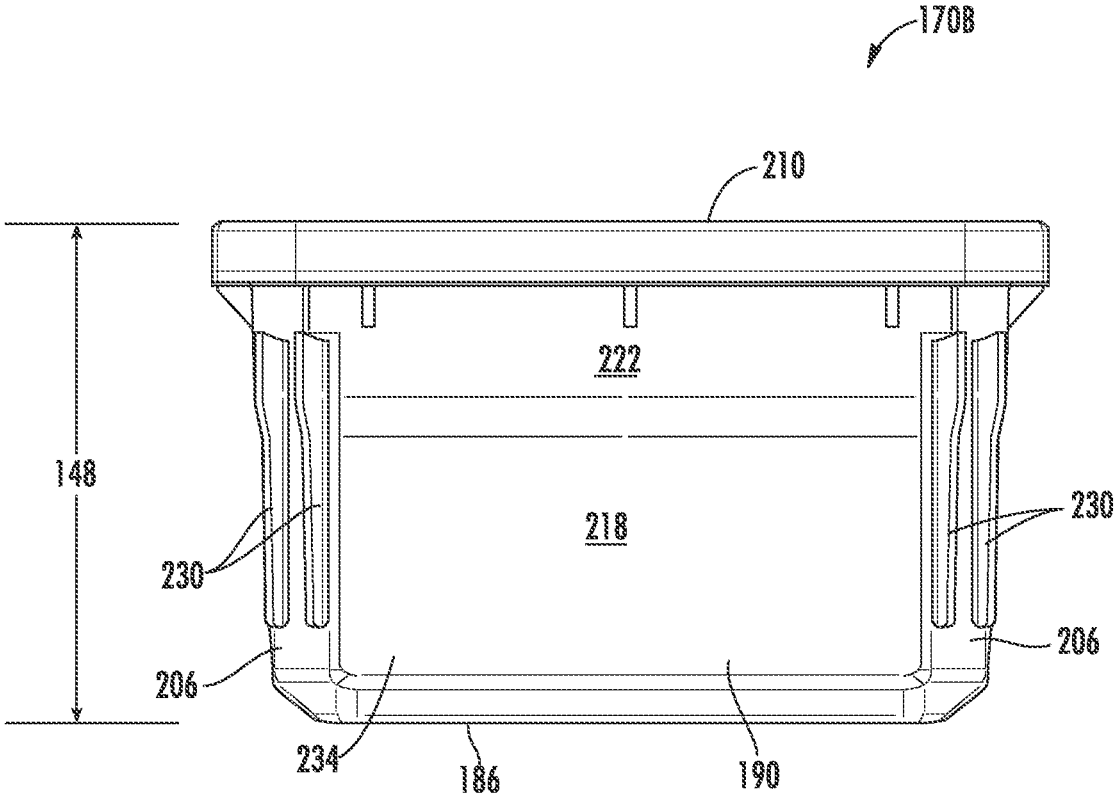

FIG. 14

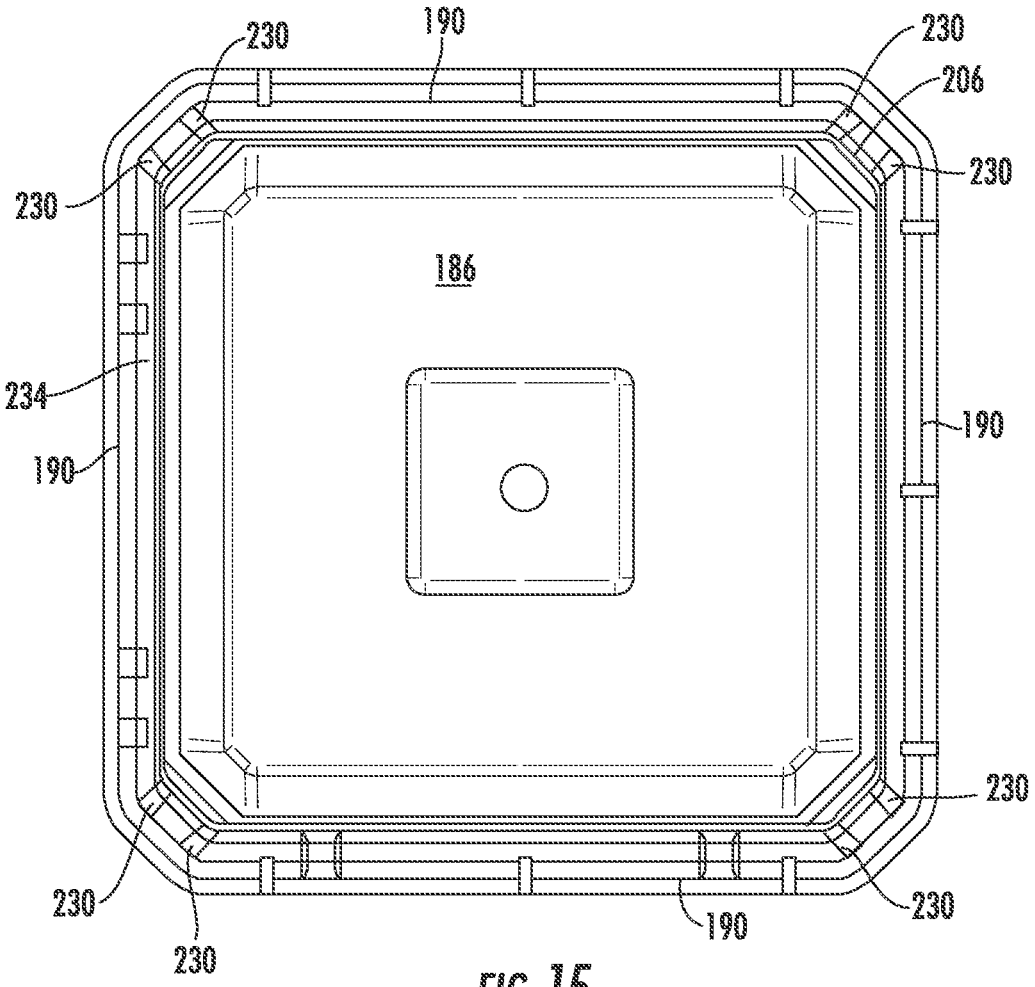

FIG. 15

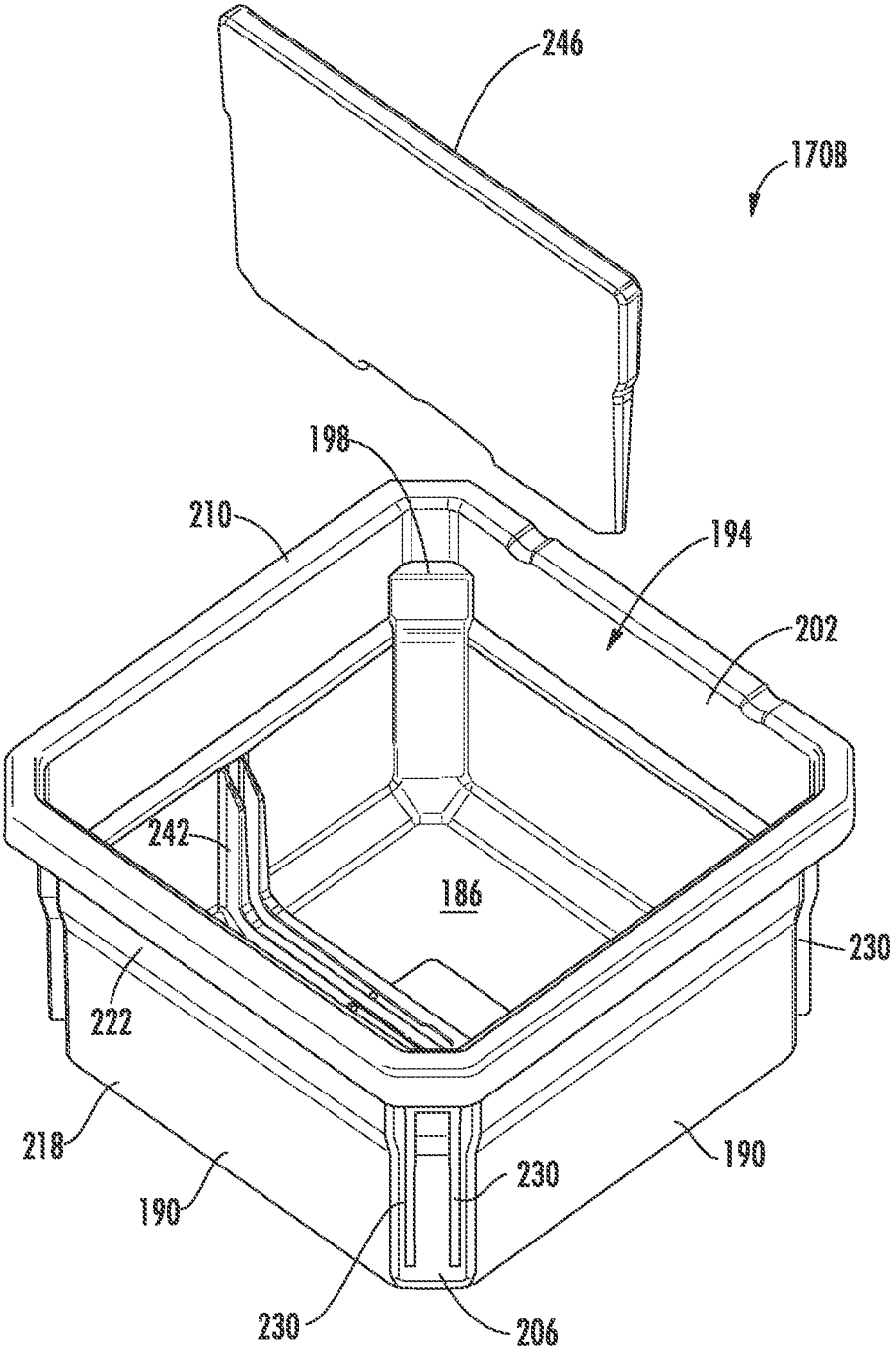

FIG. 16

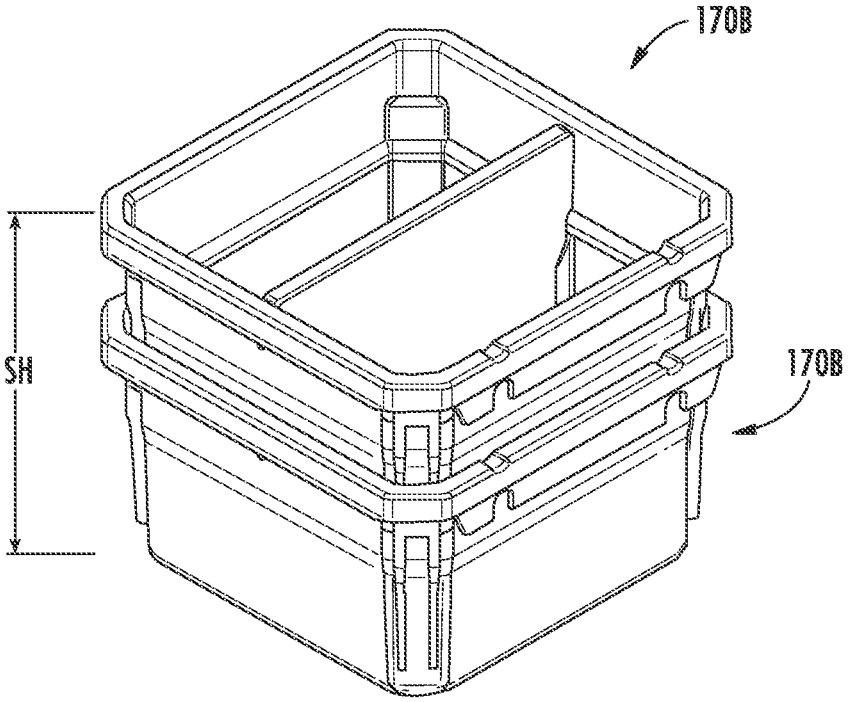

FIG. 17

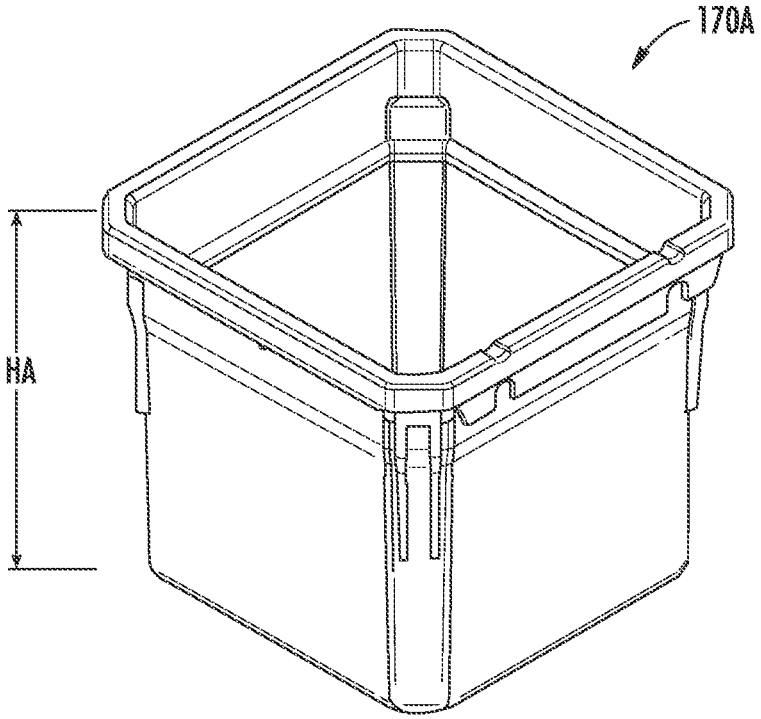

FIG. 18

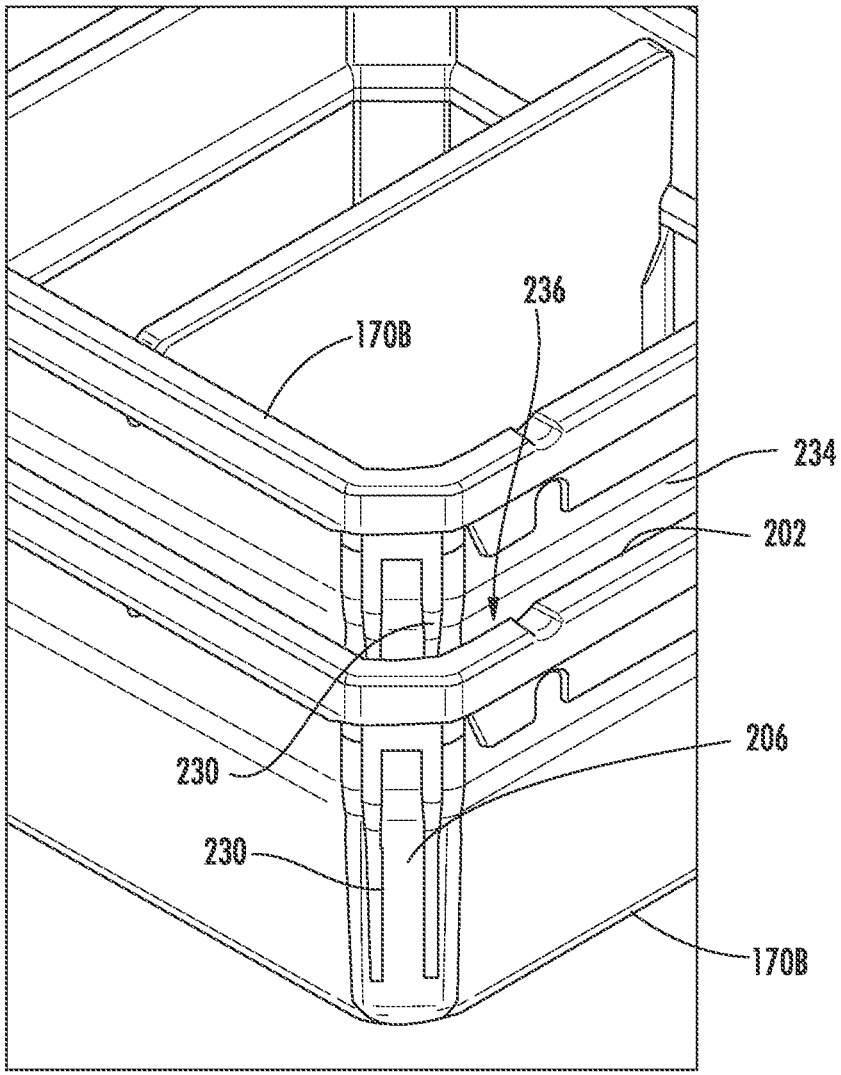

FIG. 19

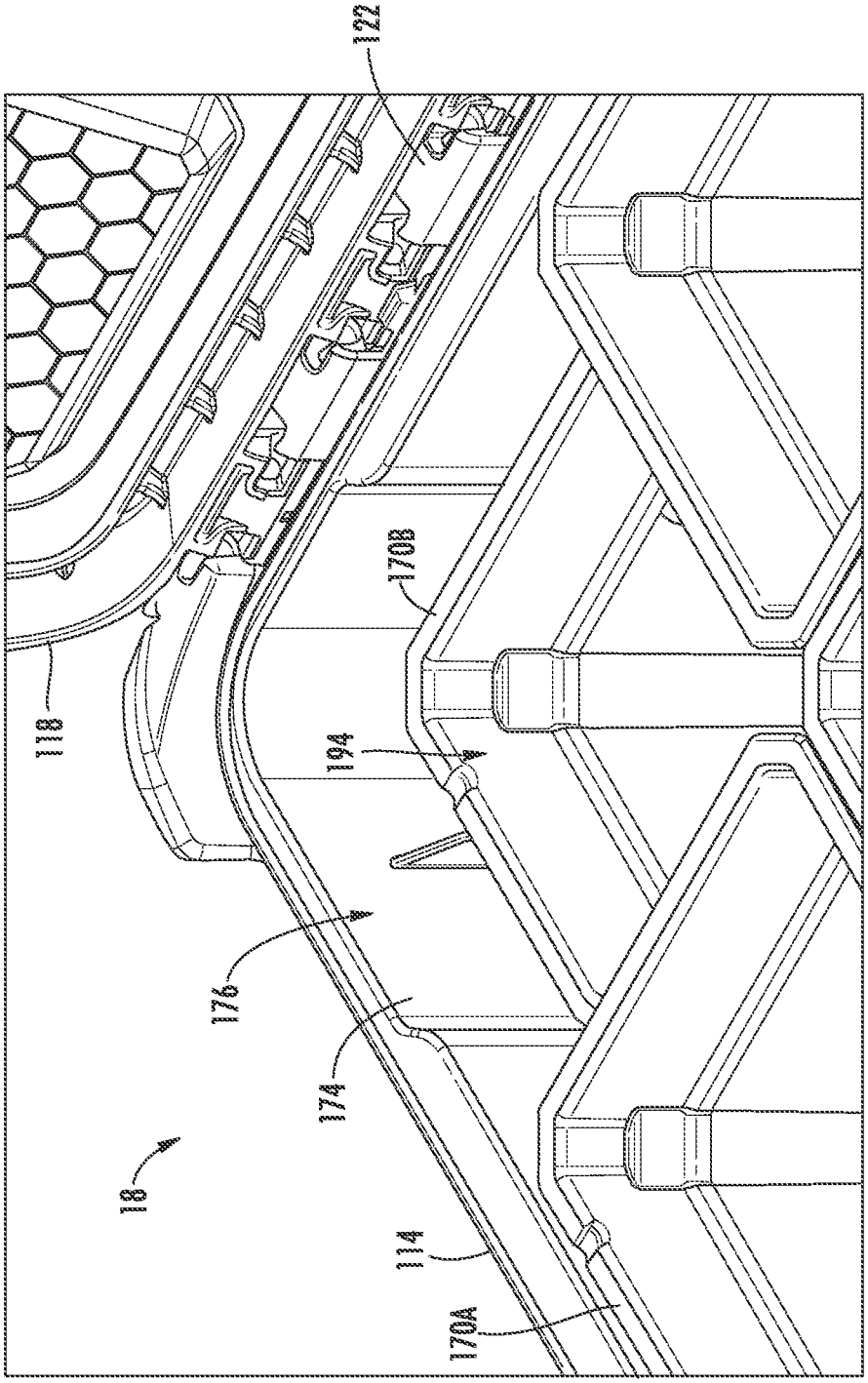

FIG. 20

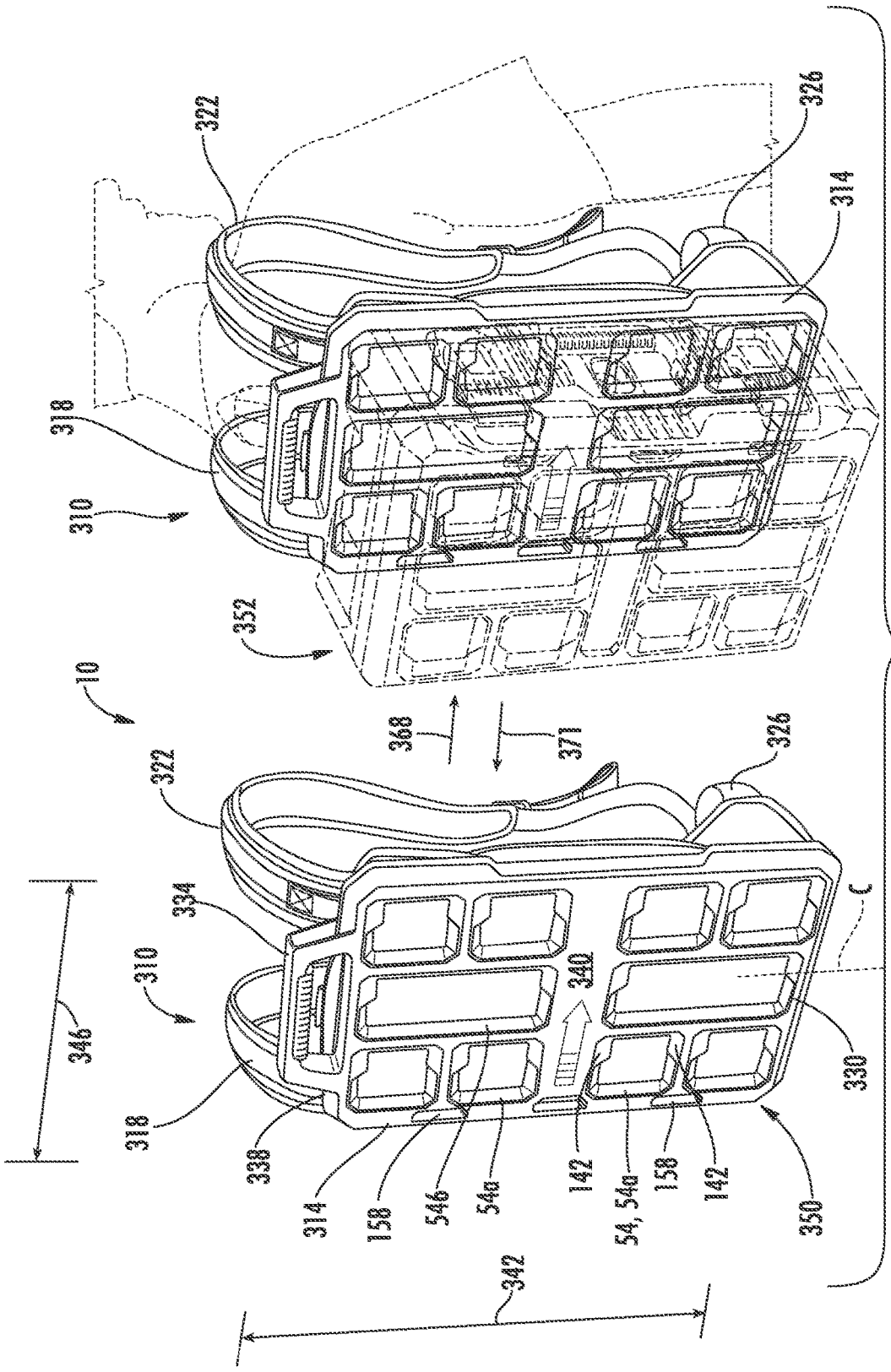
322
326
314
318
310
352
10
368
371
322
326
334
310
340
346
318
330
338
314
158
546
54a
142
54, 54a
158
142
350
342
C

FIG. 21

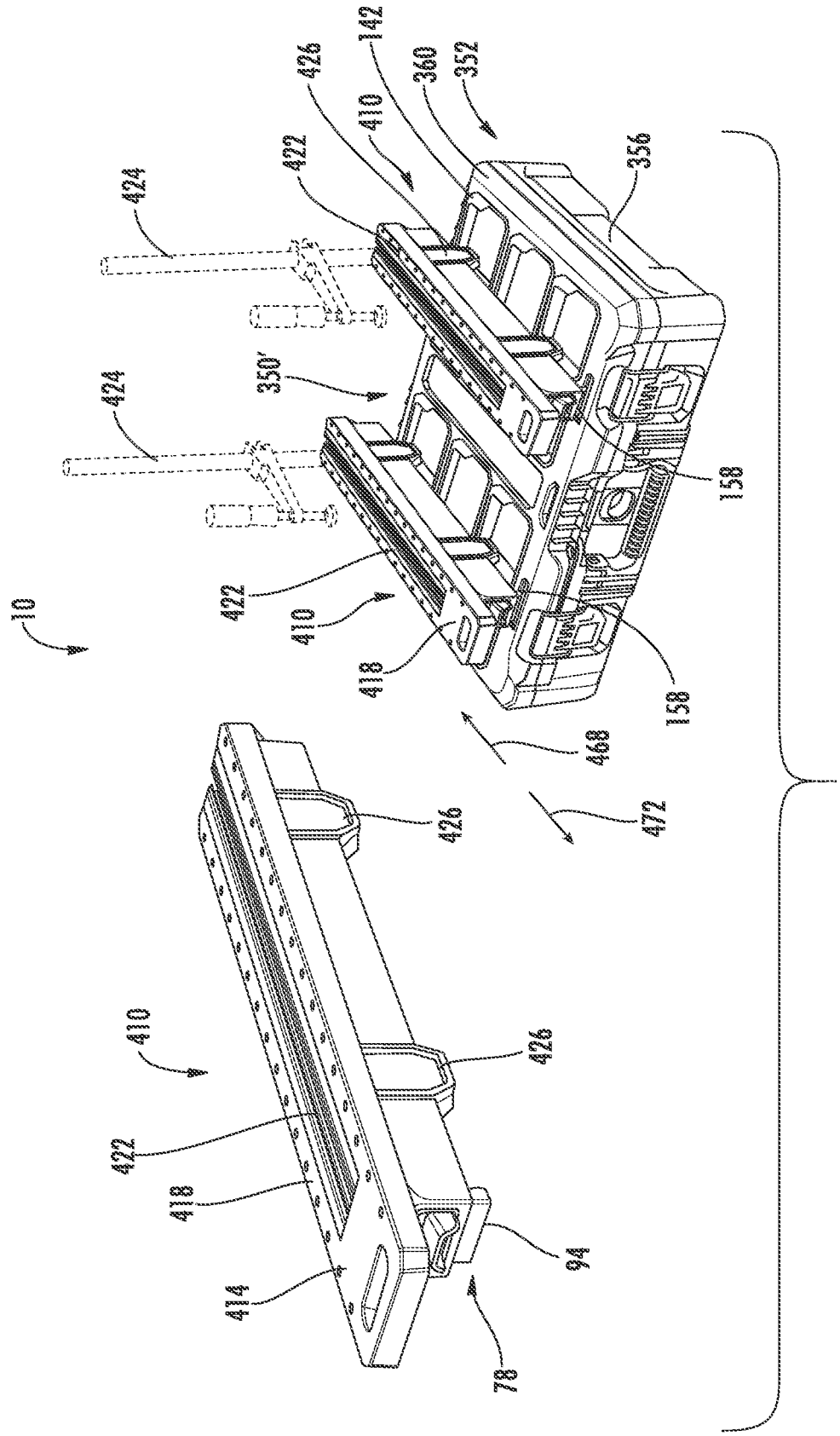
10
424
424
422
422
426
410
142
360
352
356
350'
158
158
410
418
468
472
426
426
410
422
418
414
94
78

FIG. 22

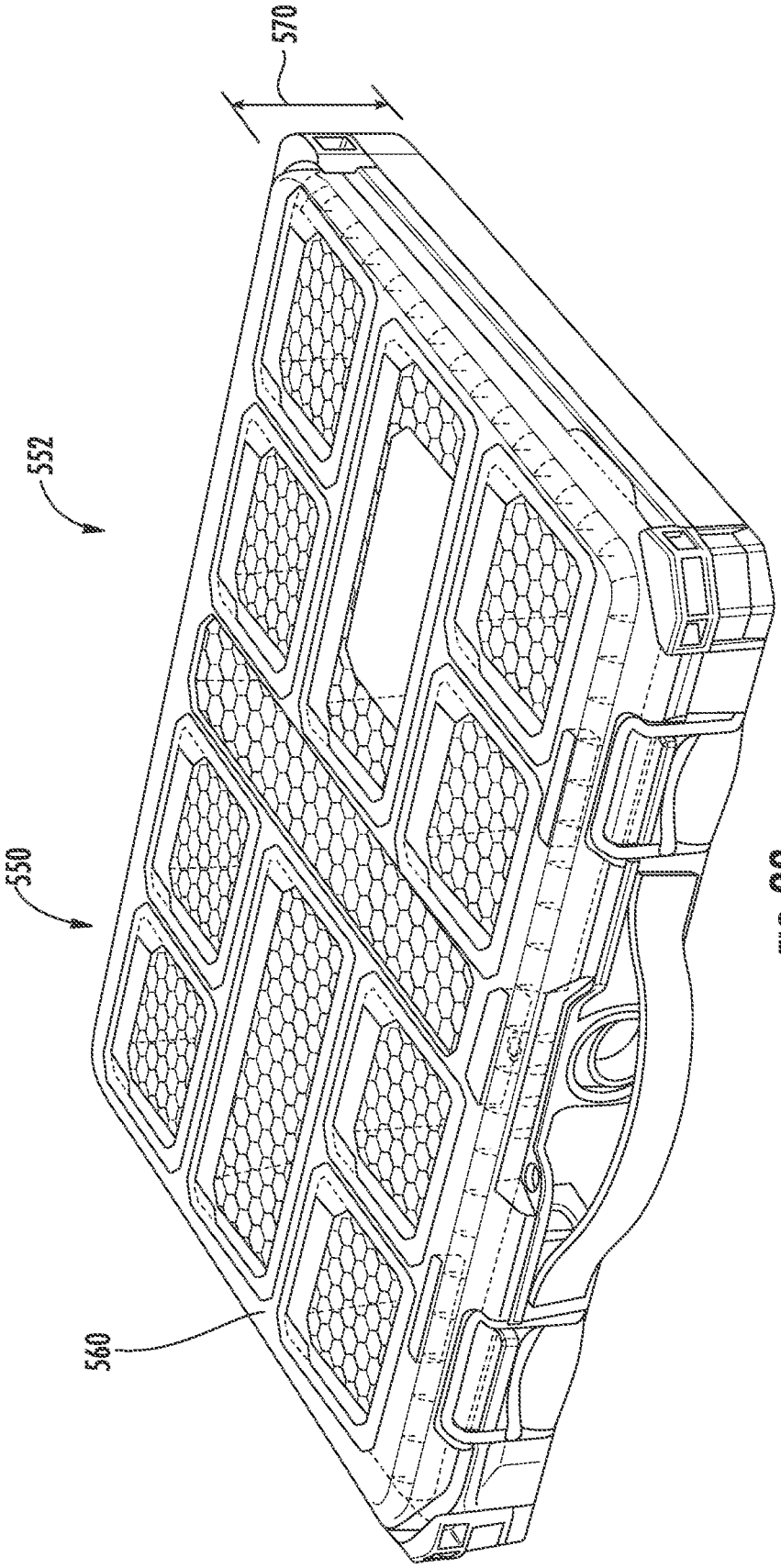

FIG. 23

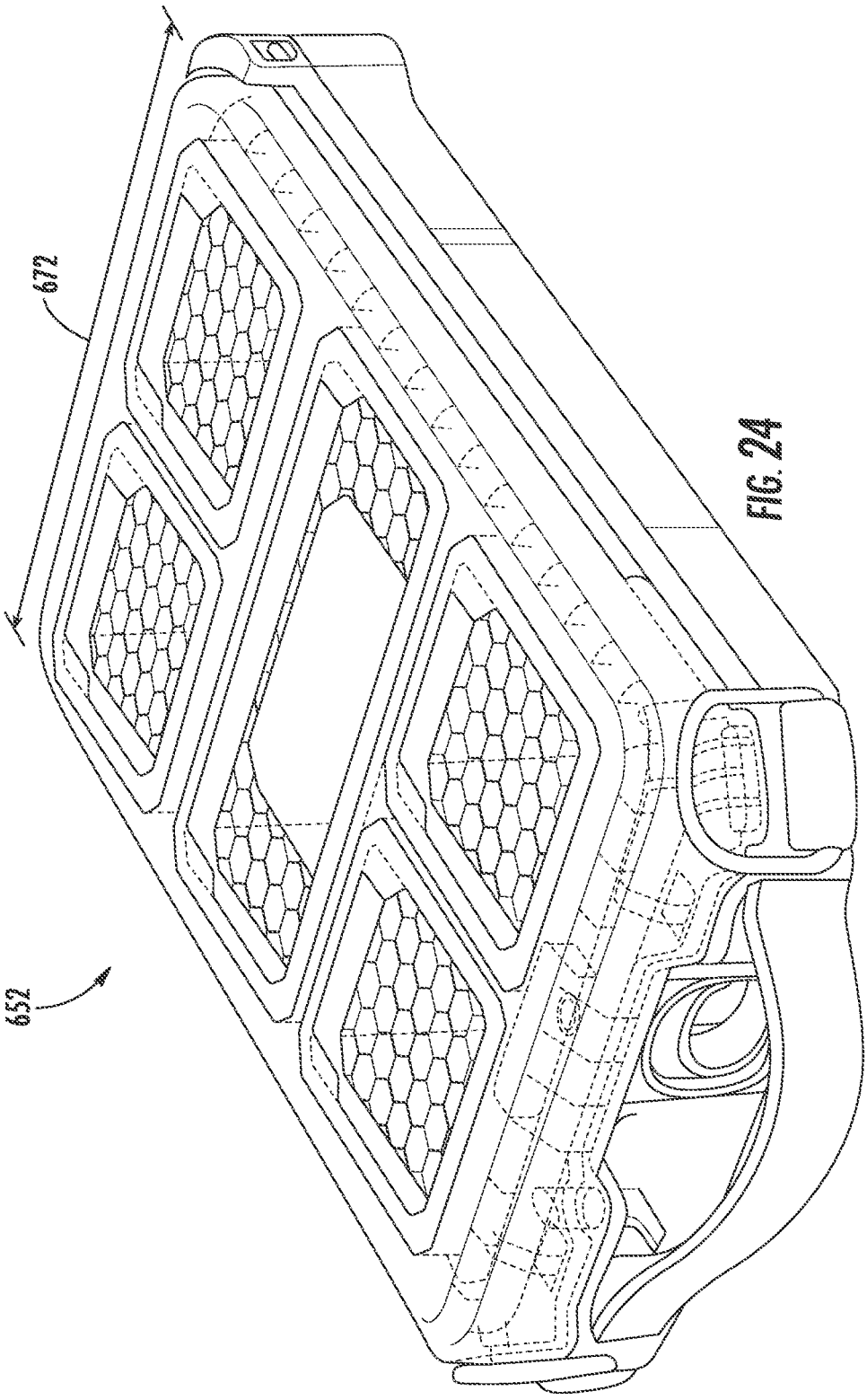

FIG. 24

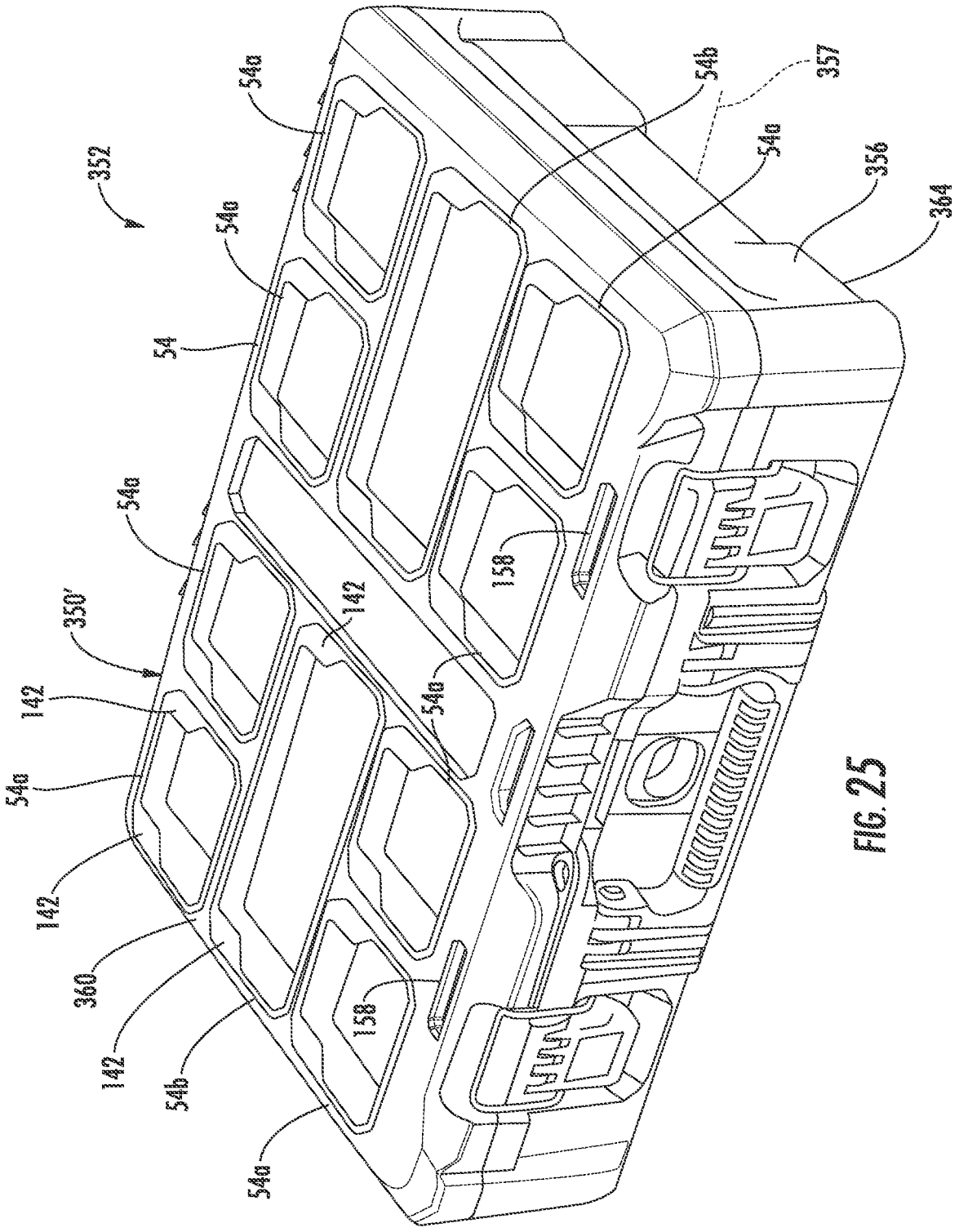
352
54a
54b
357
54a
356
364
54a
54
54a
158
142
350'
142
54a
54a
142
360
142
158
54b
54a

FIG. 25

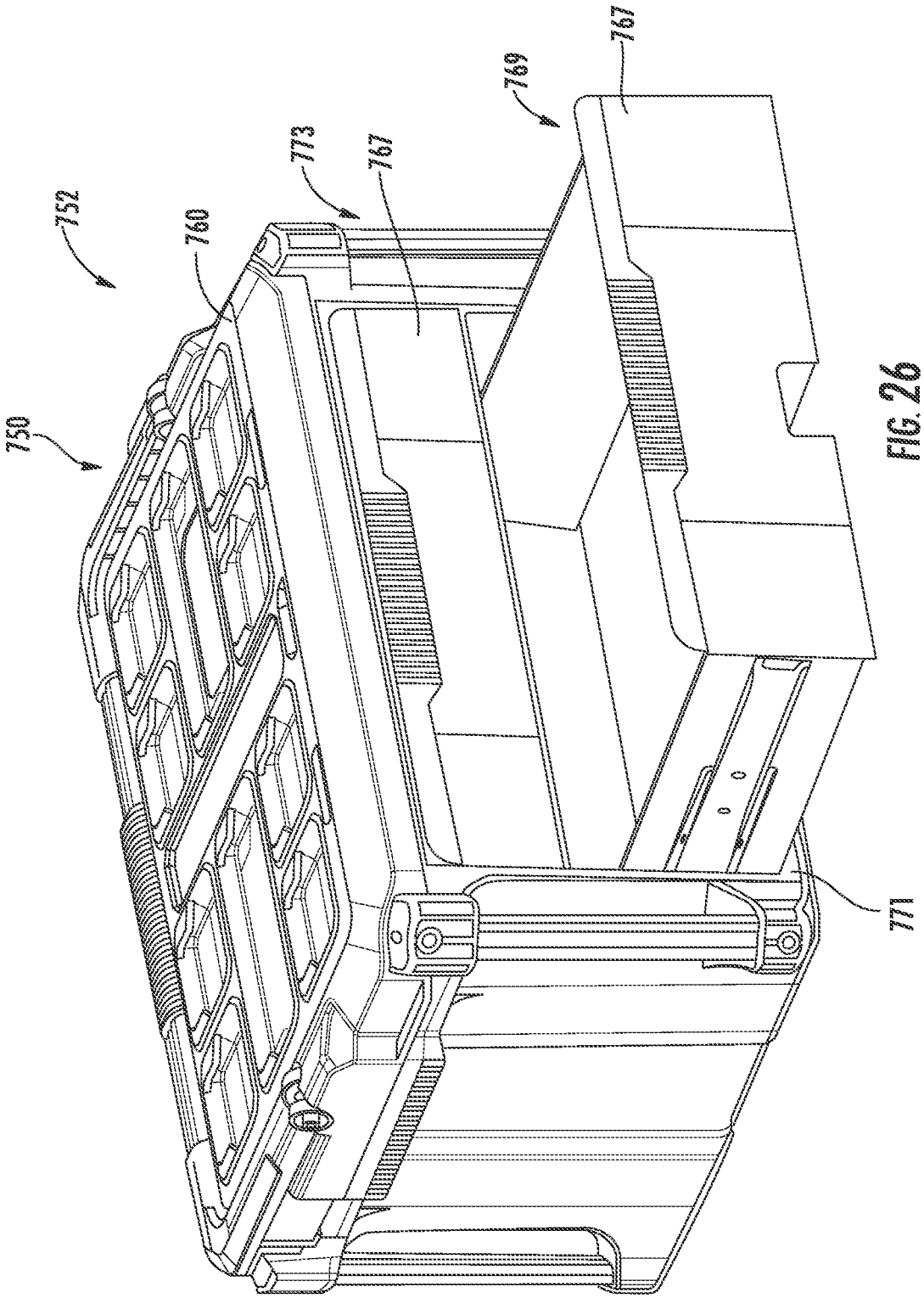

FIG. 26

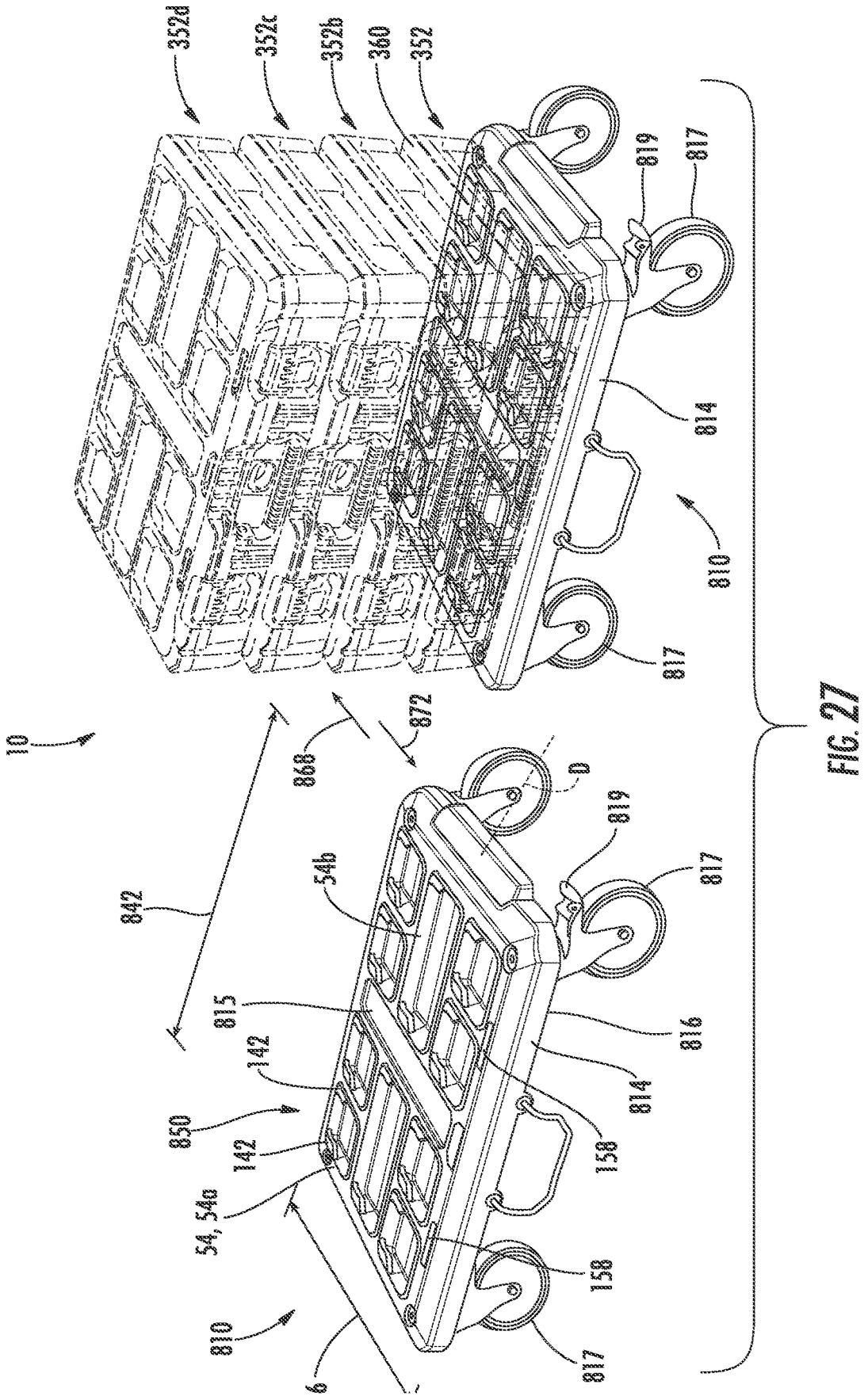
352d
352c
352b
360
352
819
817
814
810
817
10
872
868
D
819
817
54b
842
815
816
142
814
850
142
158
54, 54a
158
810
817
6

FIG. 27

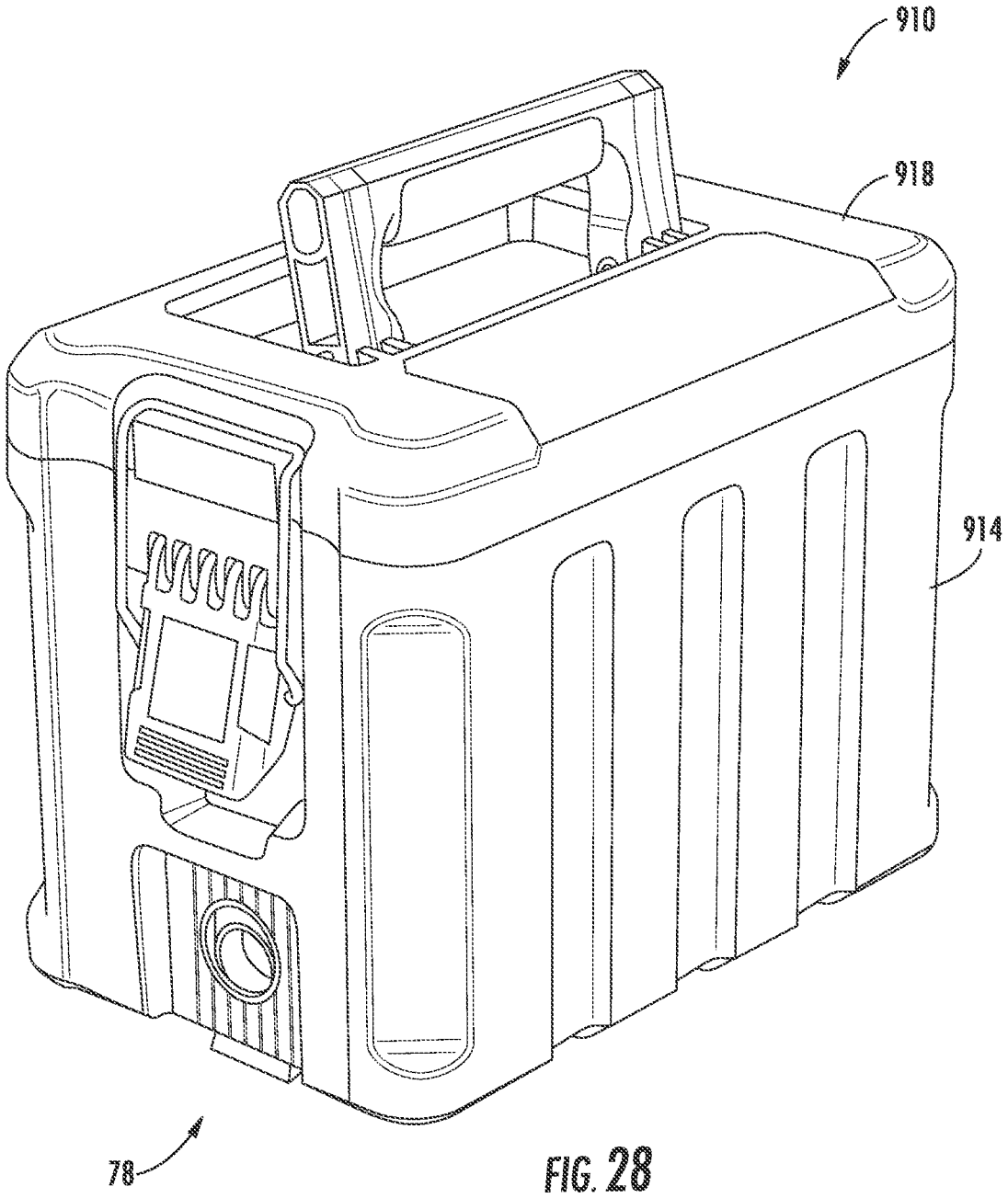

FIG. 28

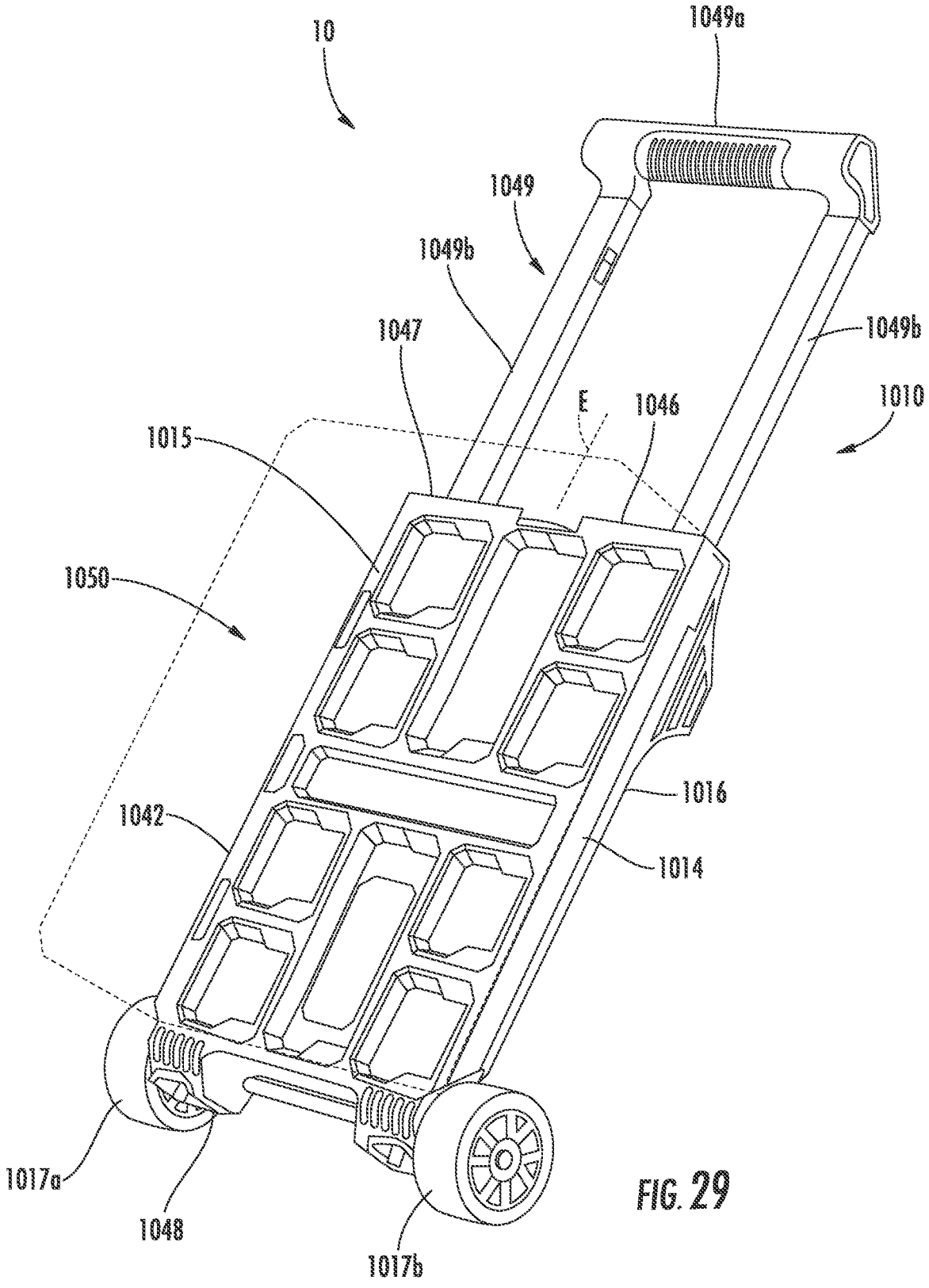
10
1049a
1049
1049b
1047
1049b
1010
E
1046
1015
1050
1016
1042
1014
1017a
1048
1017b

FIG. 29

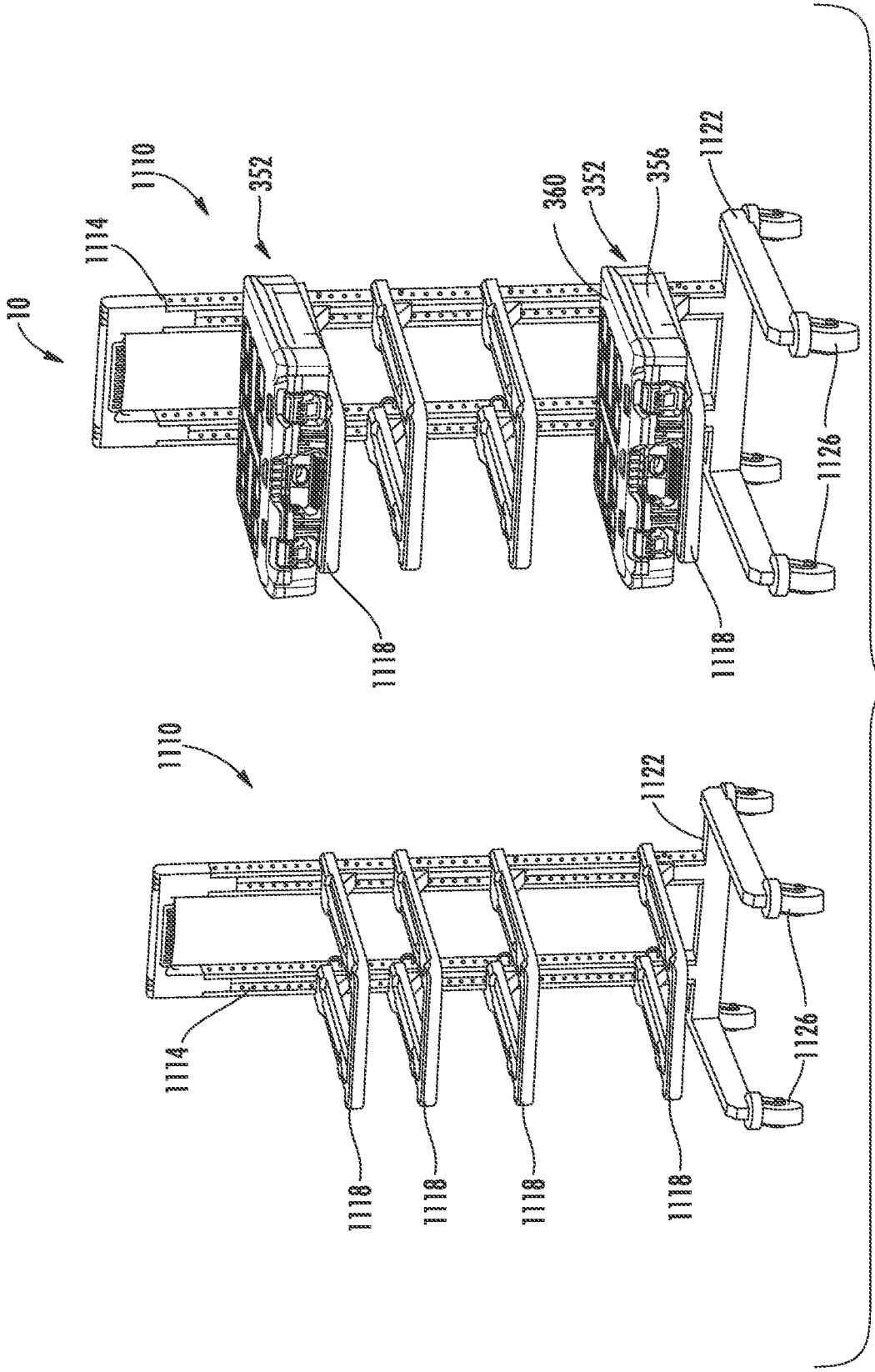
10
1110
1114
352
360
352
356
1122
1126
1118
1118
1110
1122
1114
1126
1118
1118
1118
1118

FIG. 30

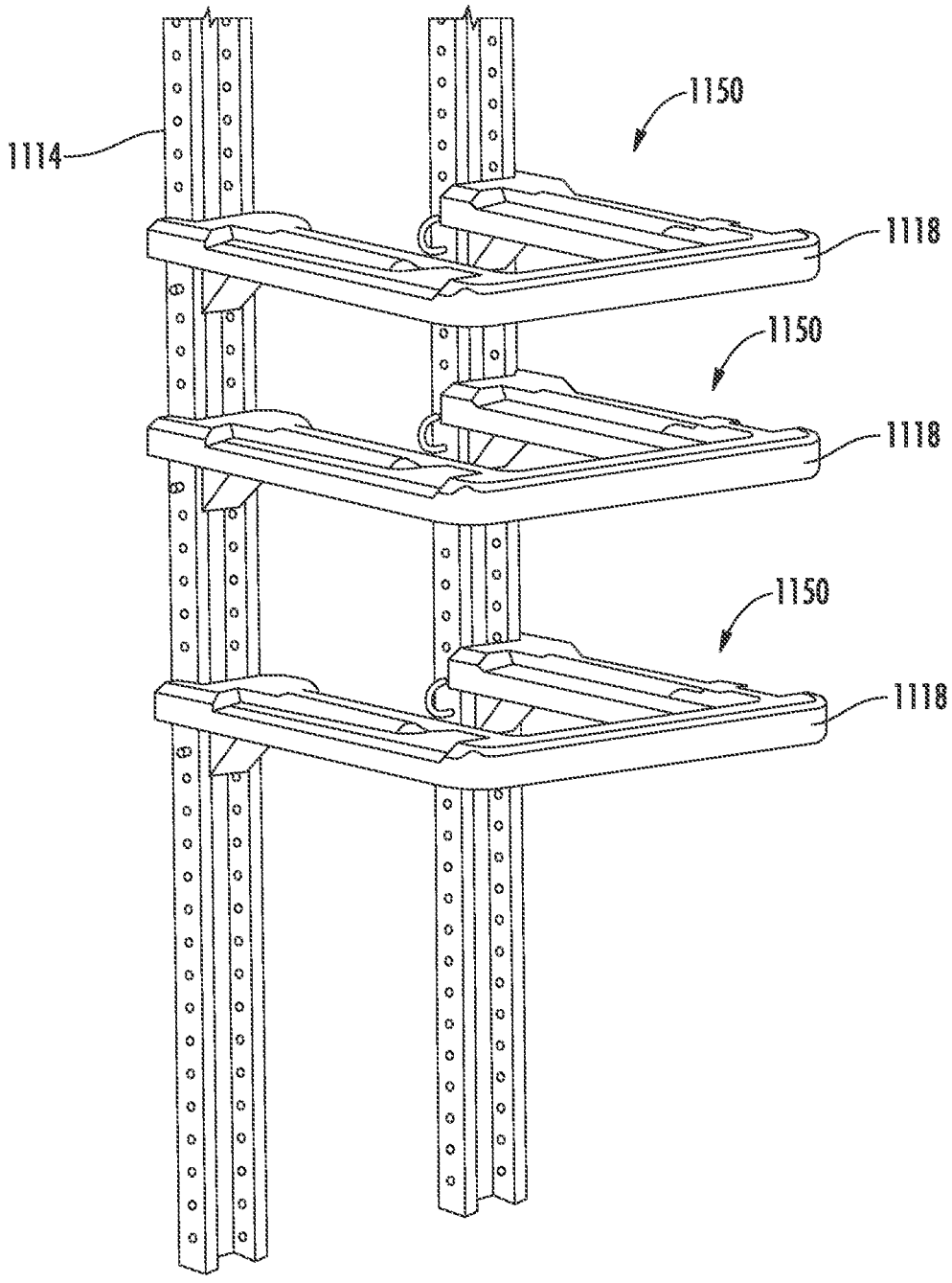

FIG. 31

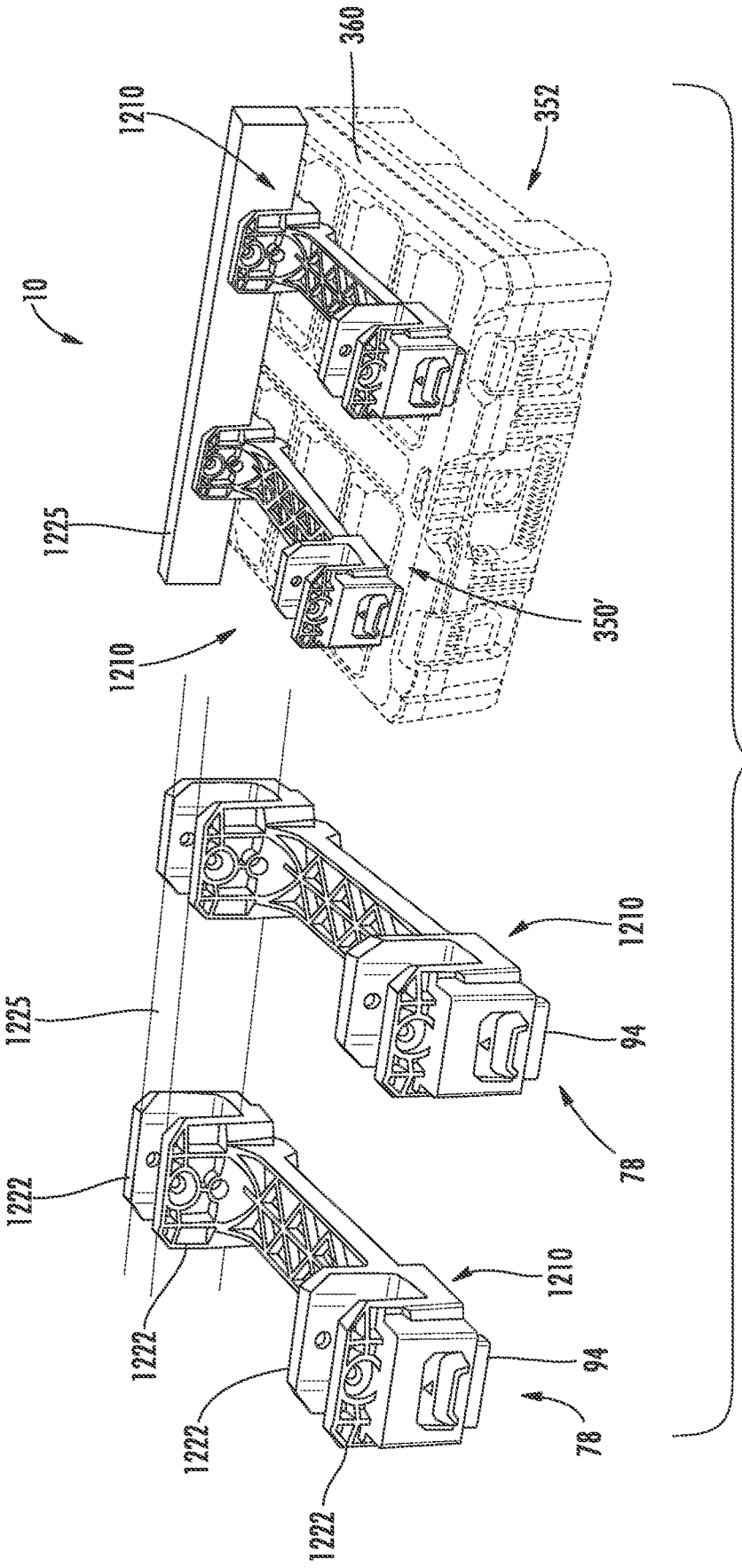
360
1210
352
10
1225
350'
1210
1210
1225
94
78
1222
1210
94
1222
78
1222
1222

FIG. 32

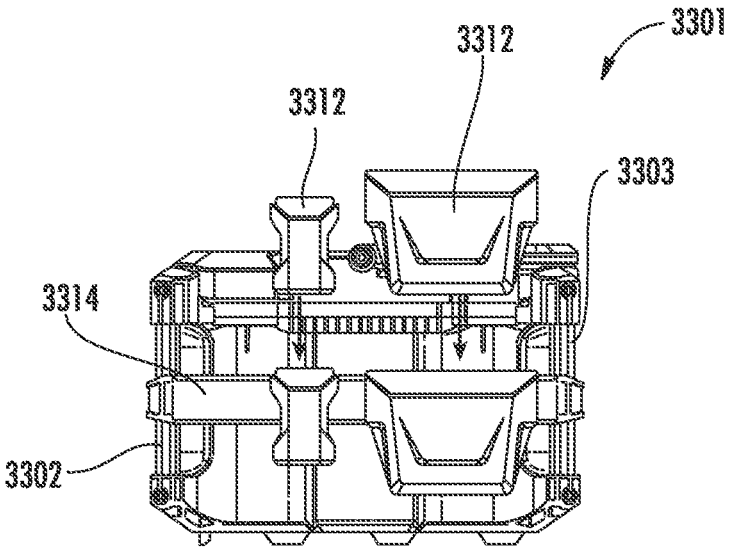

FIG. 33A

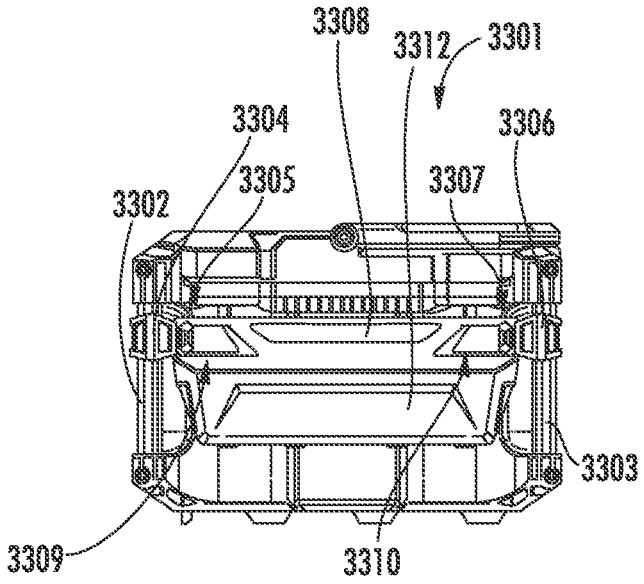

FIG. 33B

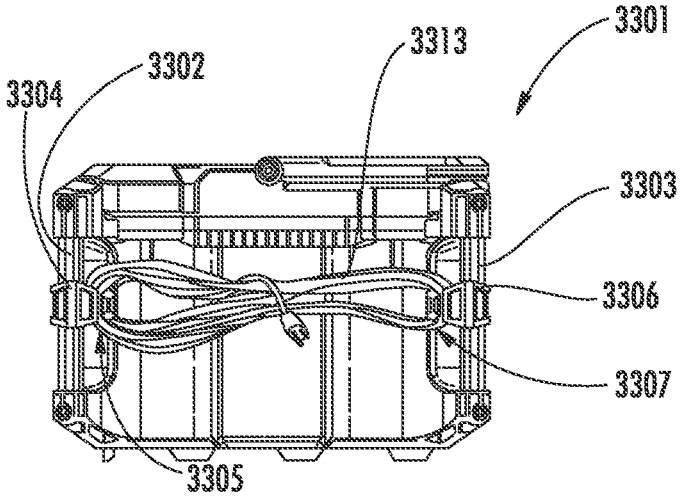

FIG. 33C

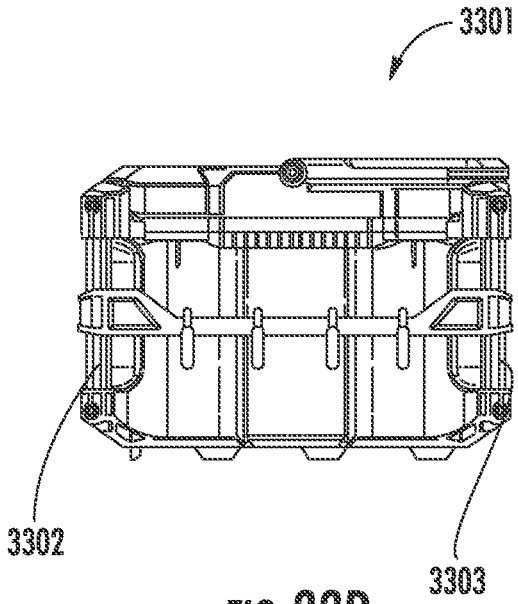

FIG. 33D

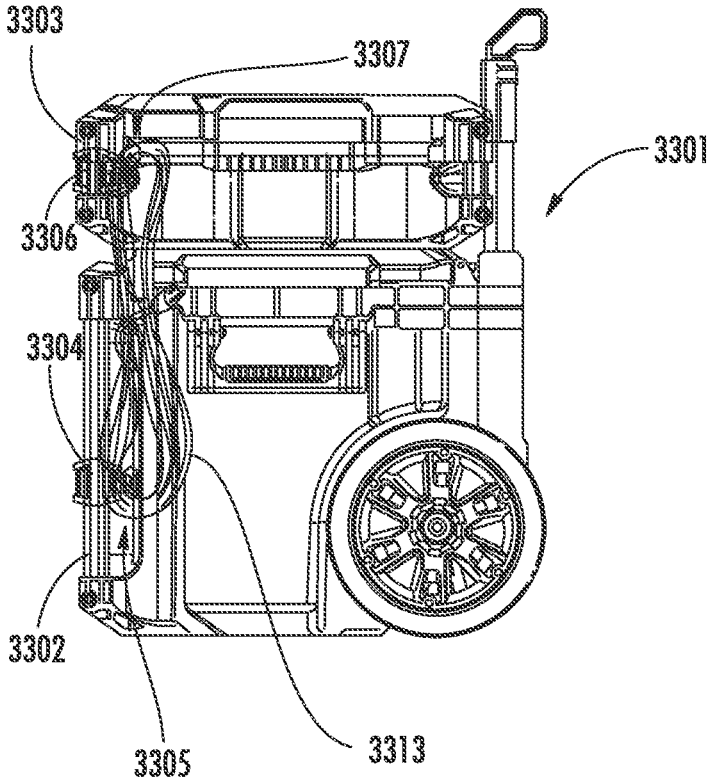

FIG. 33E

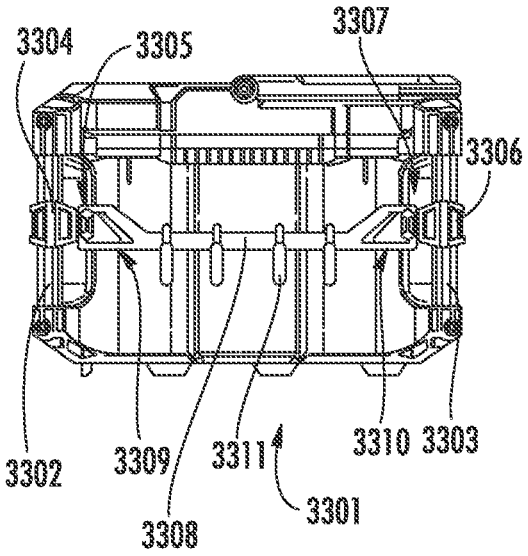

FIG. 33F

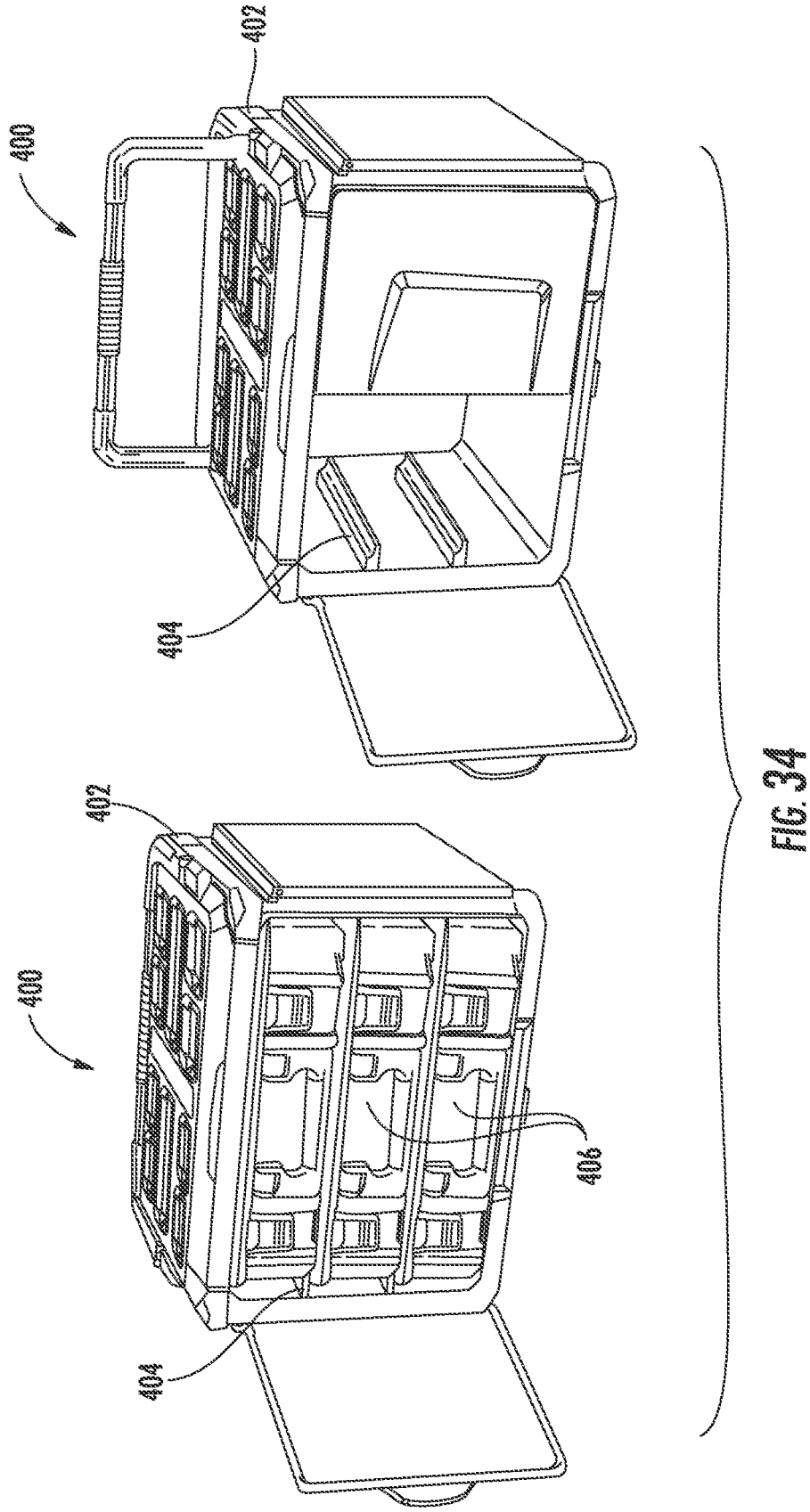

FIG. 34

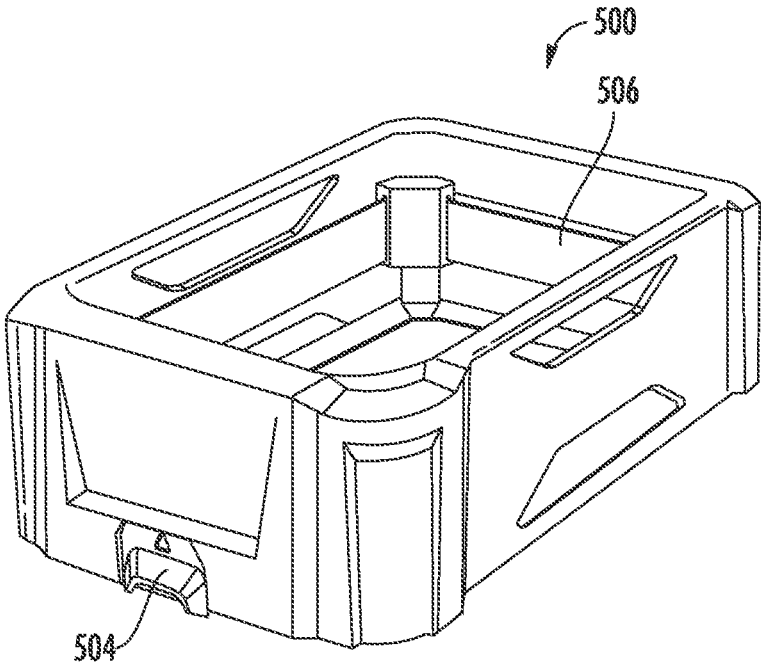

FIG. 35

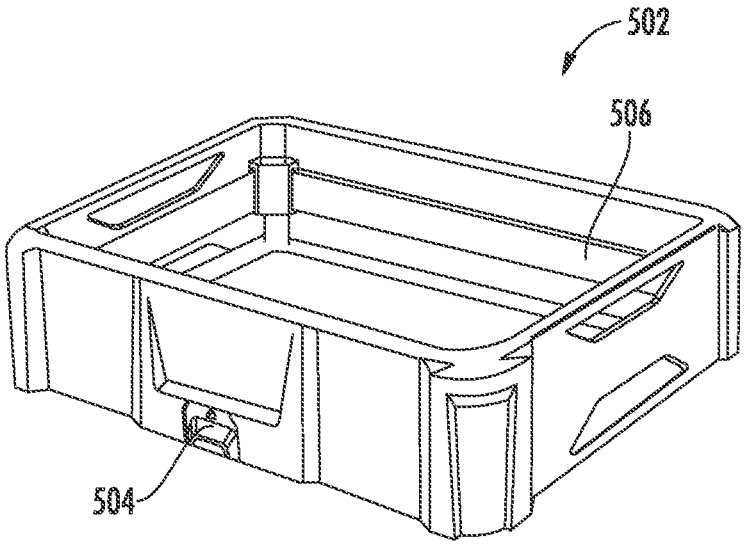

FIG. 36

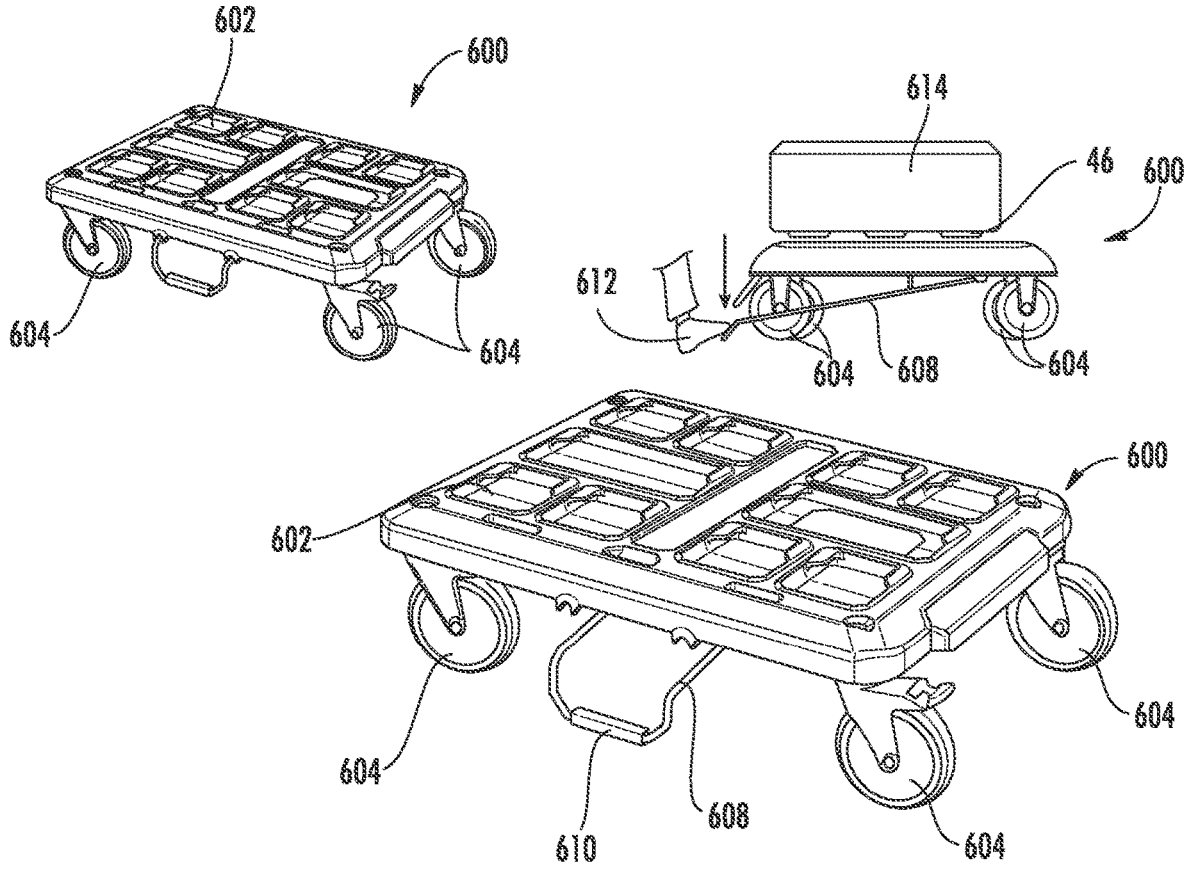
602
600
604
604
614
46
600
612
604
608
604
600
602
604
604
610
608
604

FIG. 37

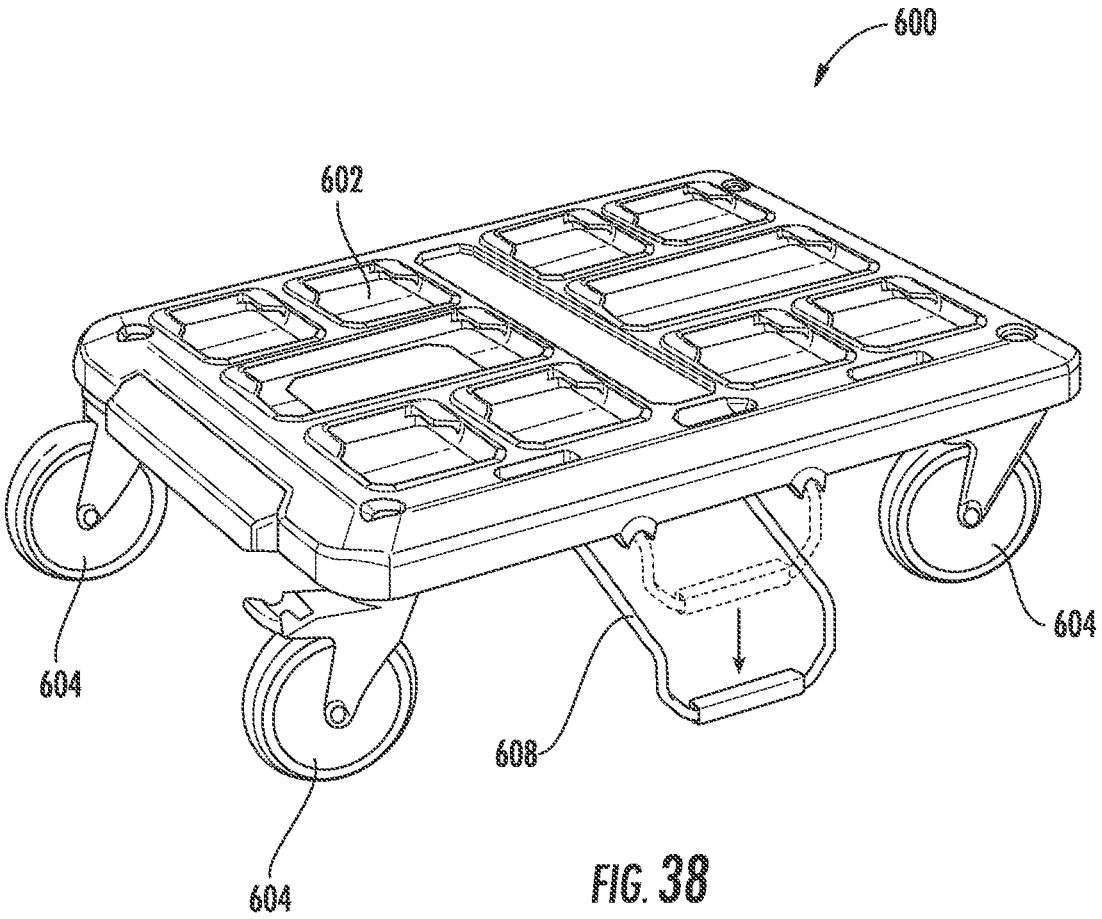

FIG. 38

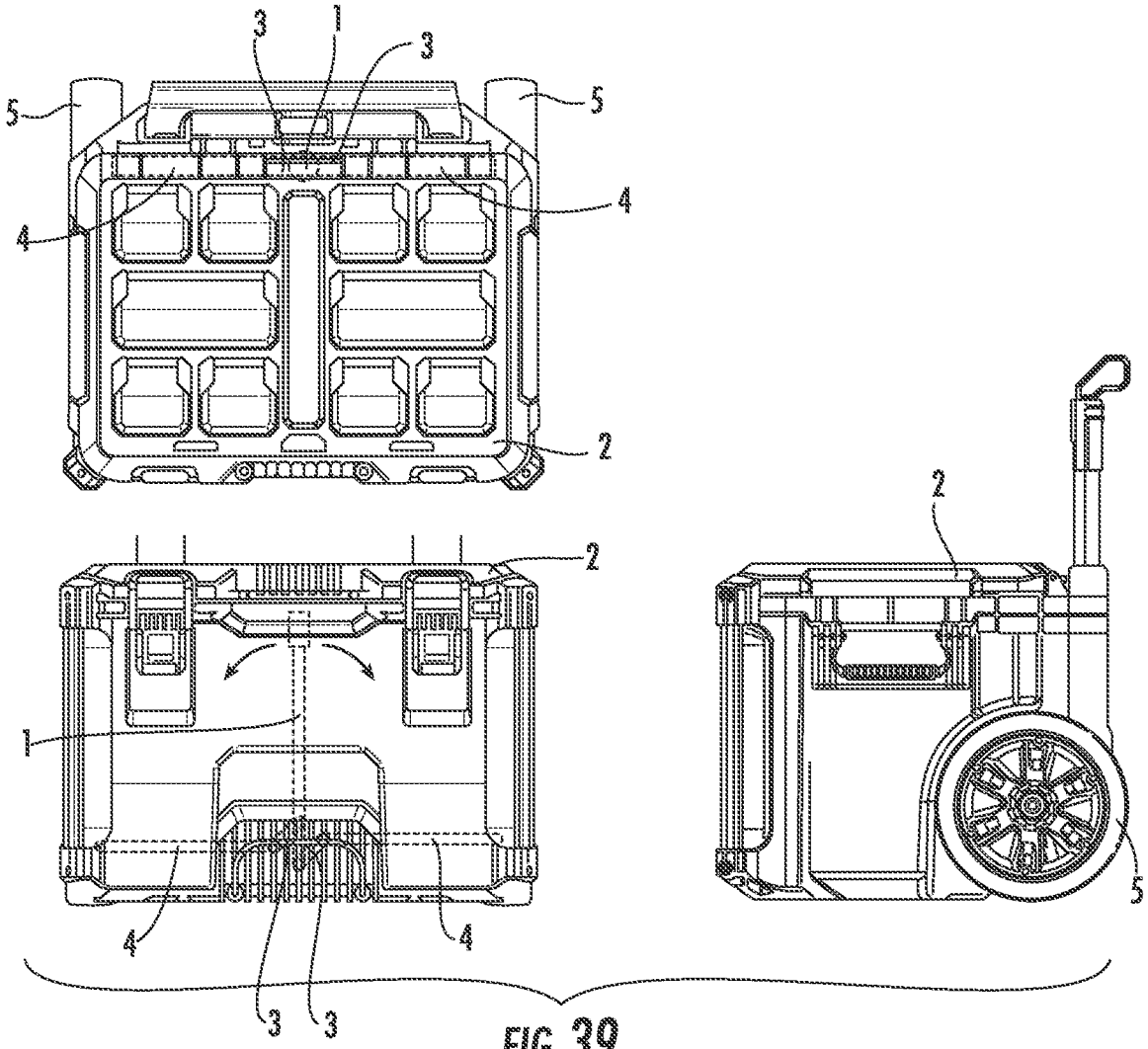

FIG. 39

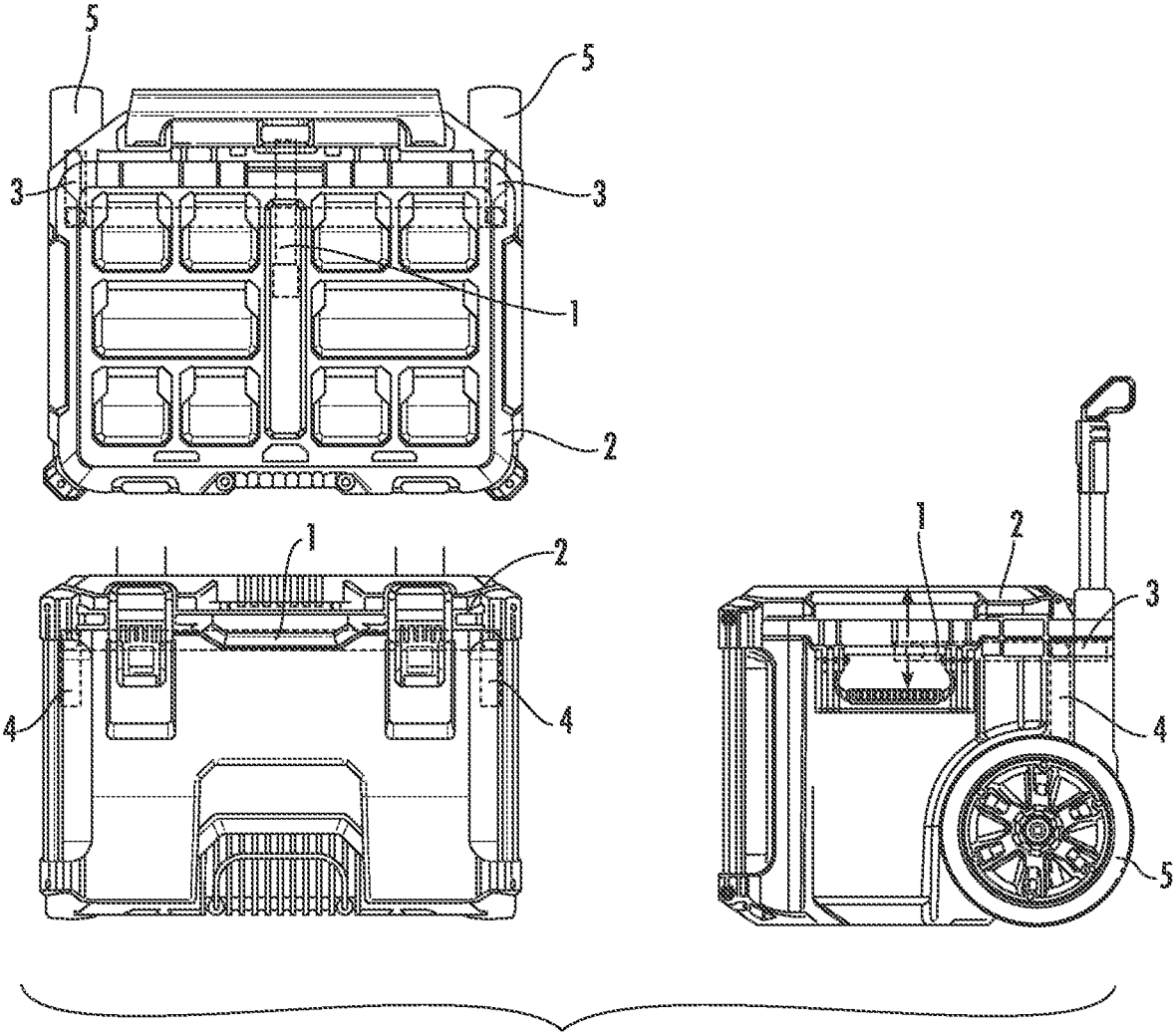

FIG. 40

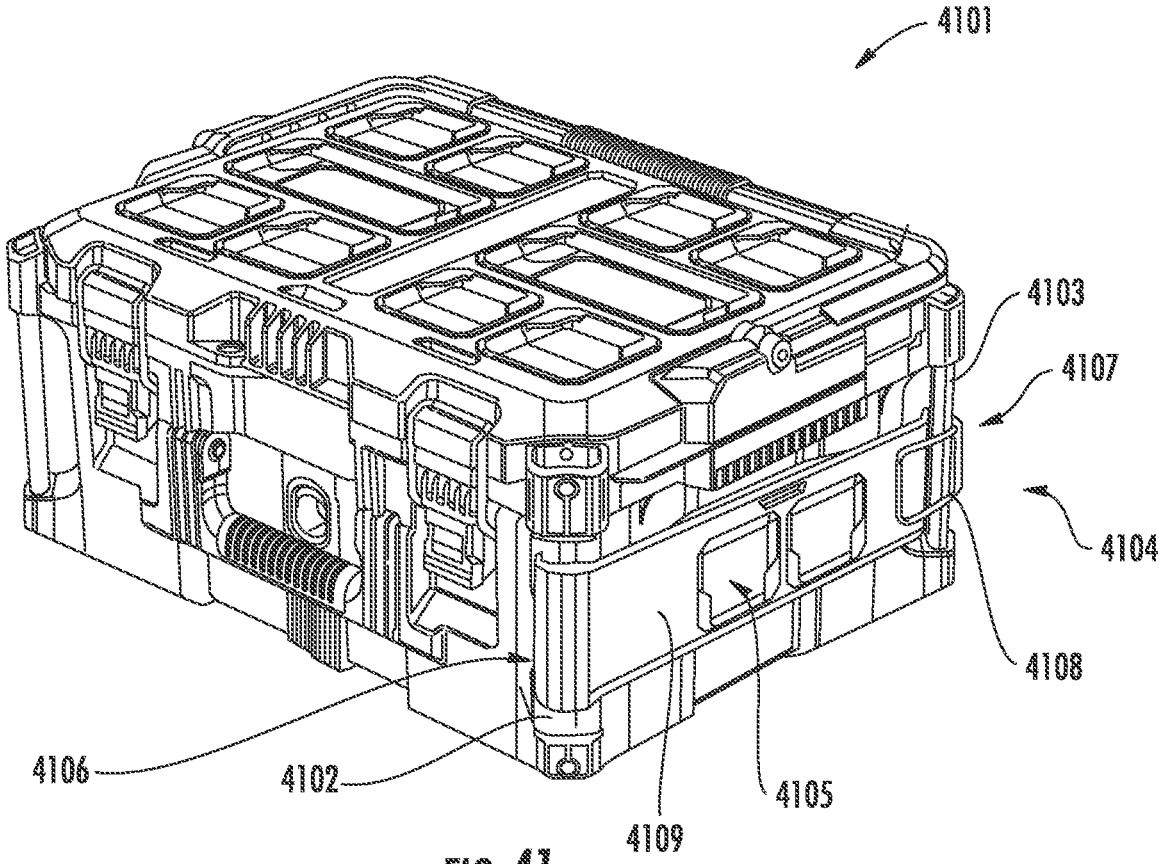

FIG. 41

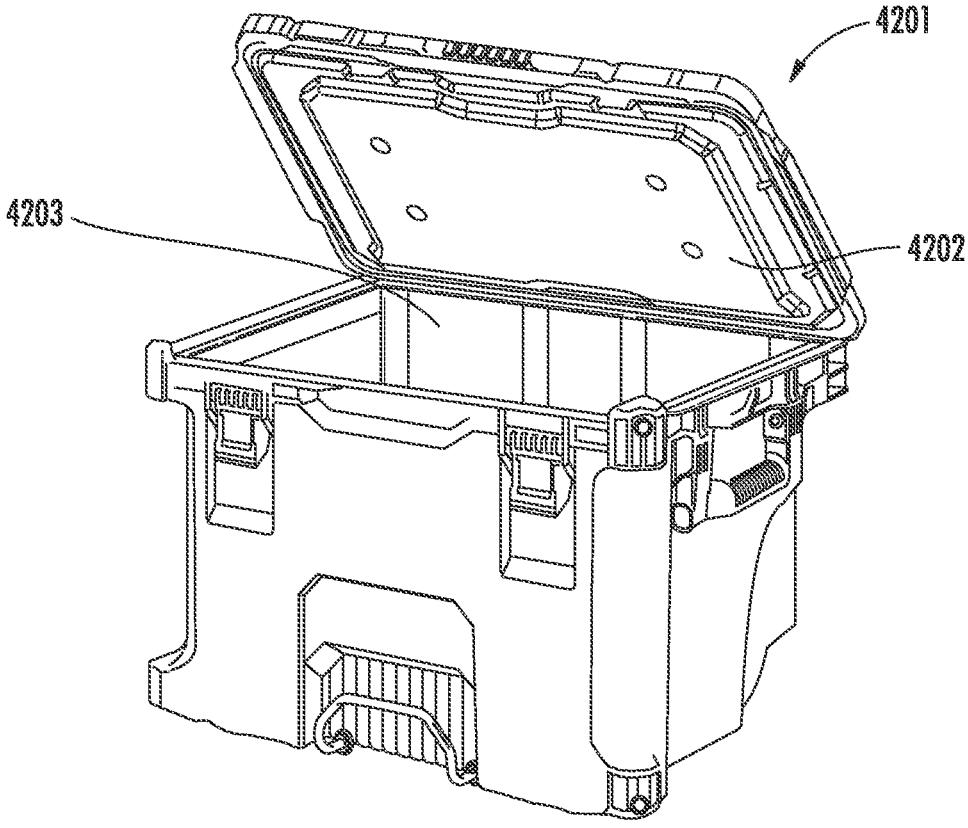

FIG. 42

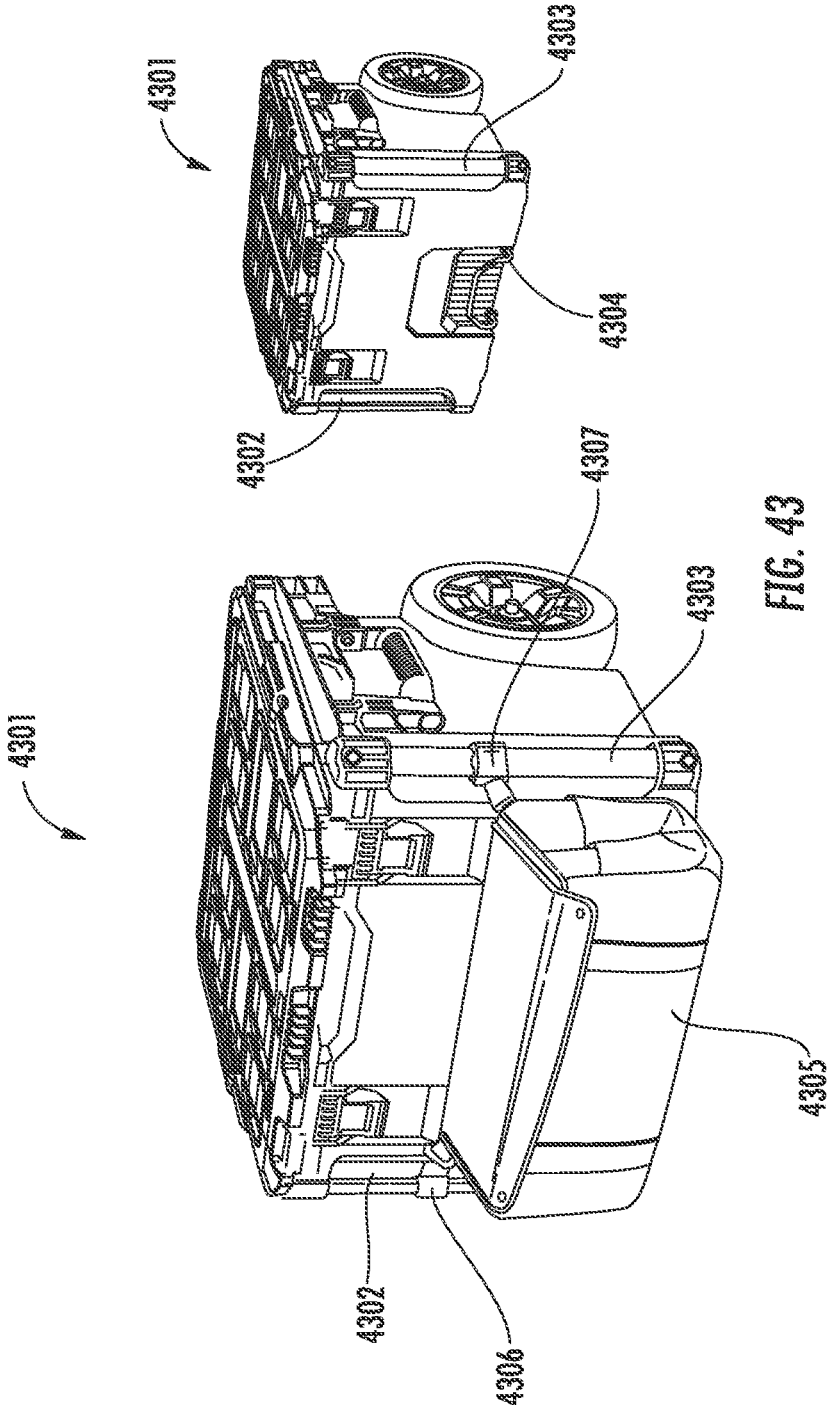

FIG. 43

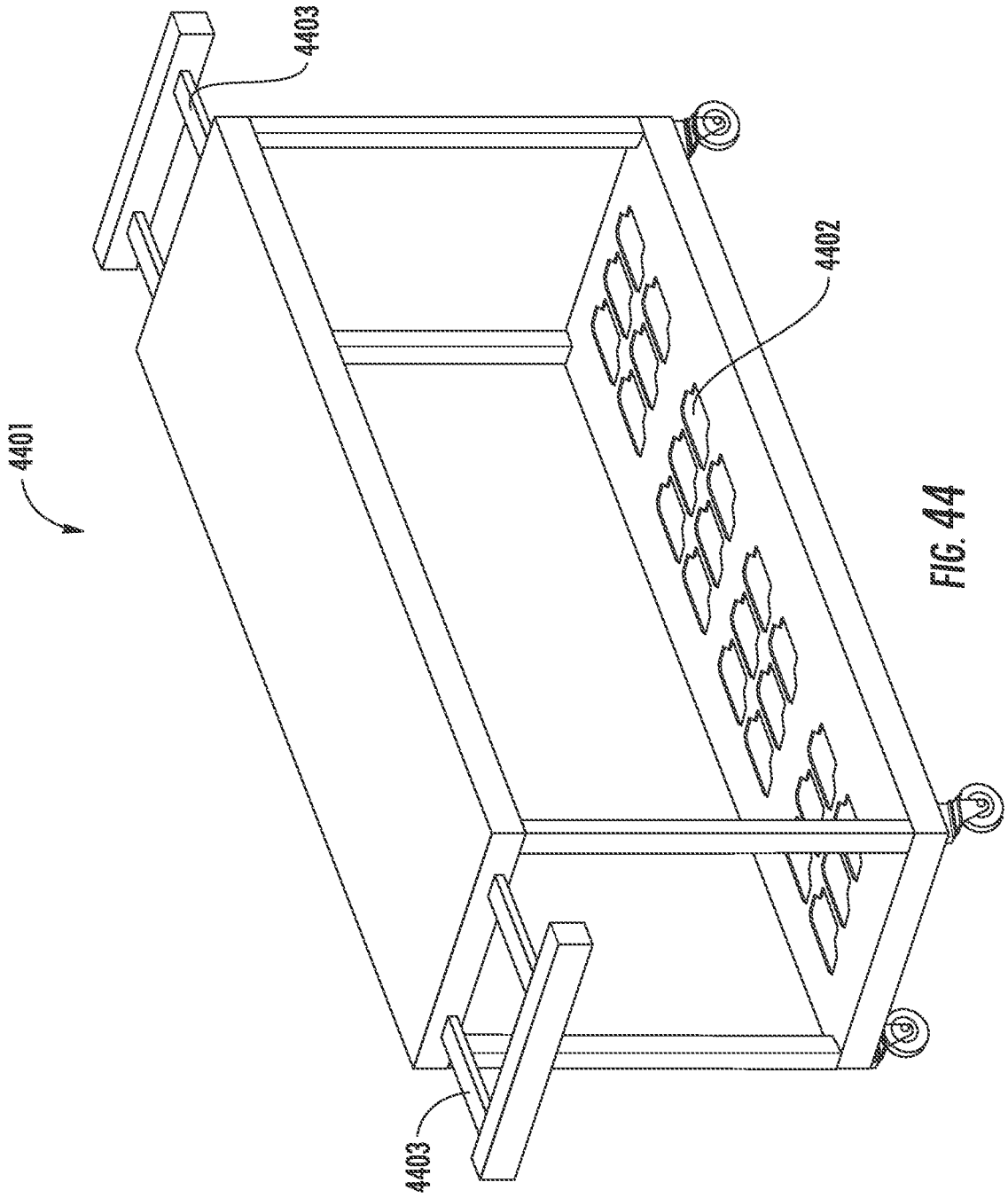

FIG. 44

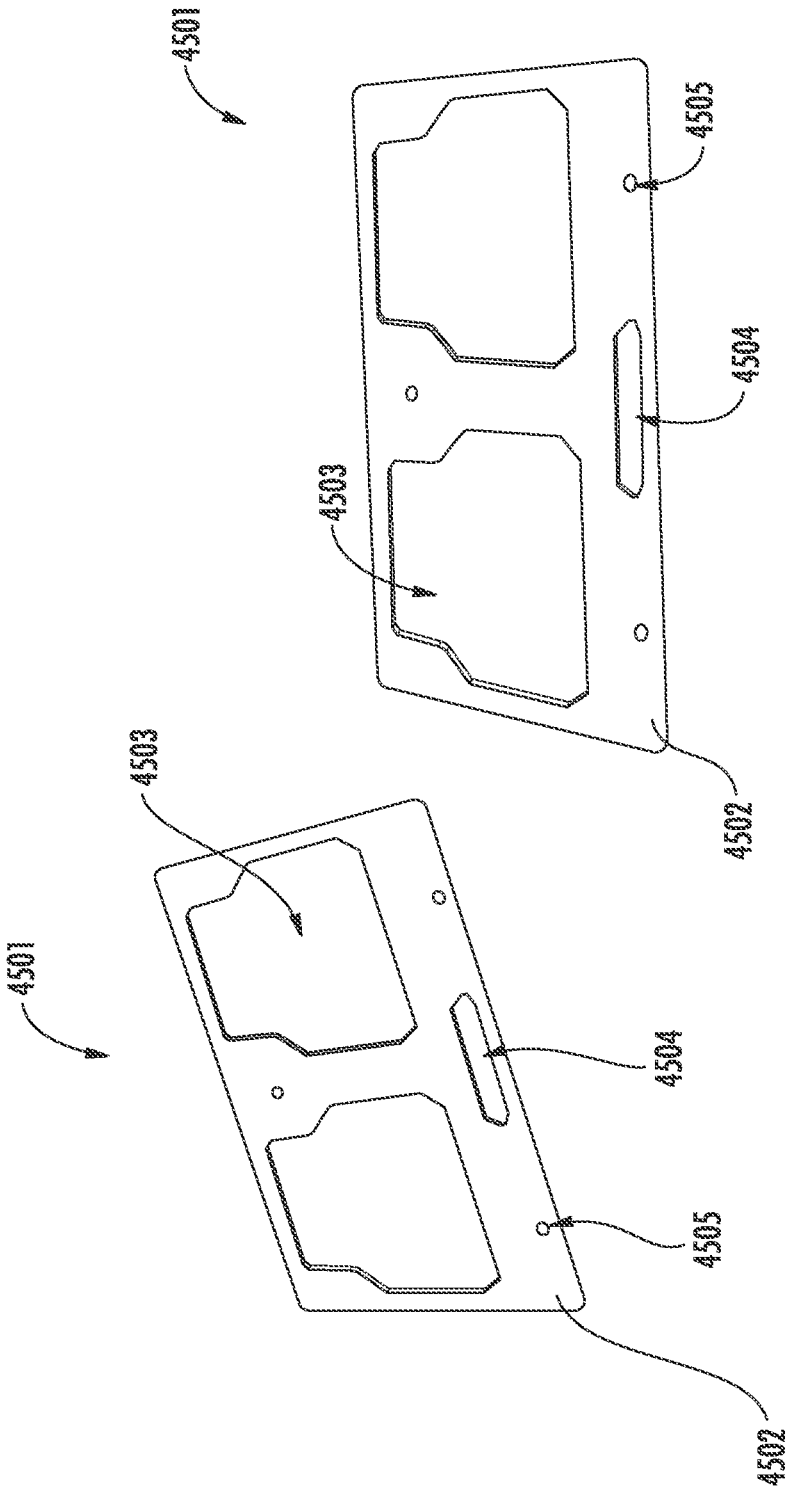

FIG. 45

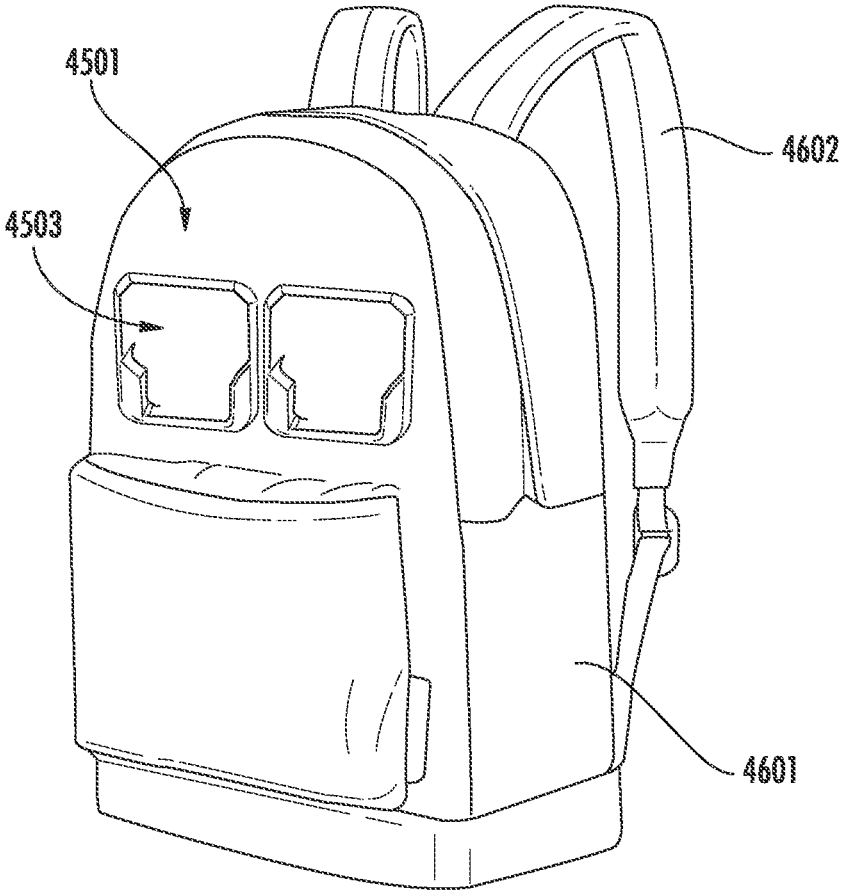

FIG. 46

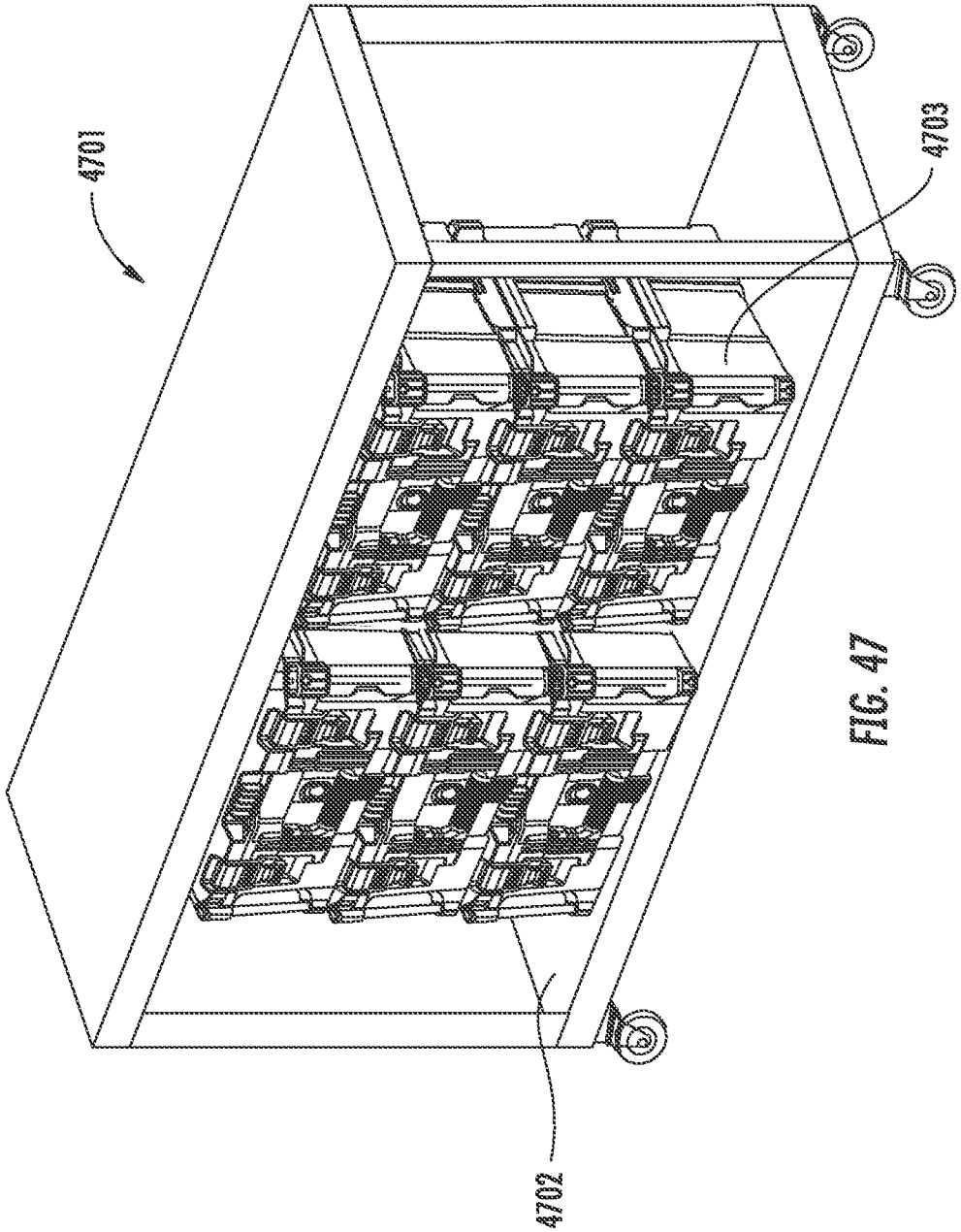

FIG. 47

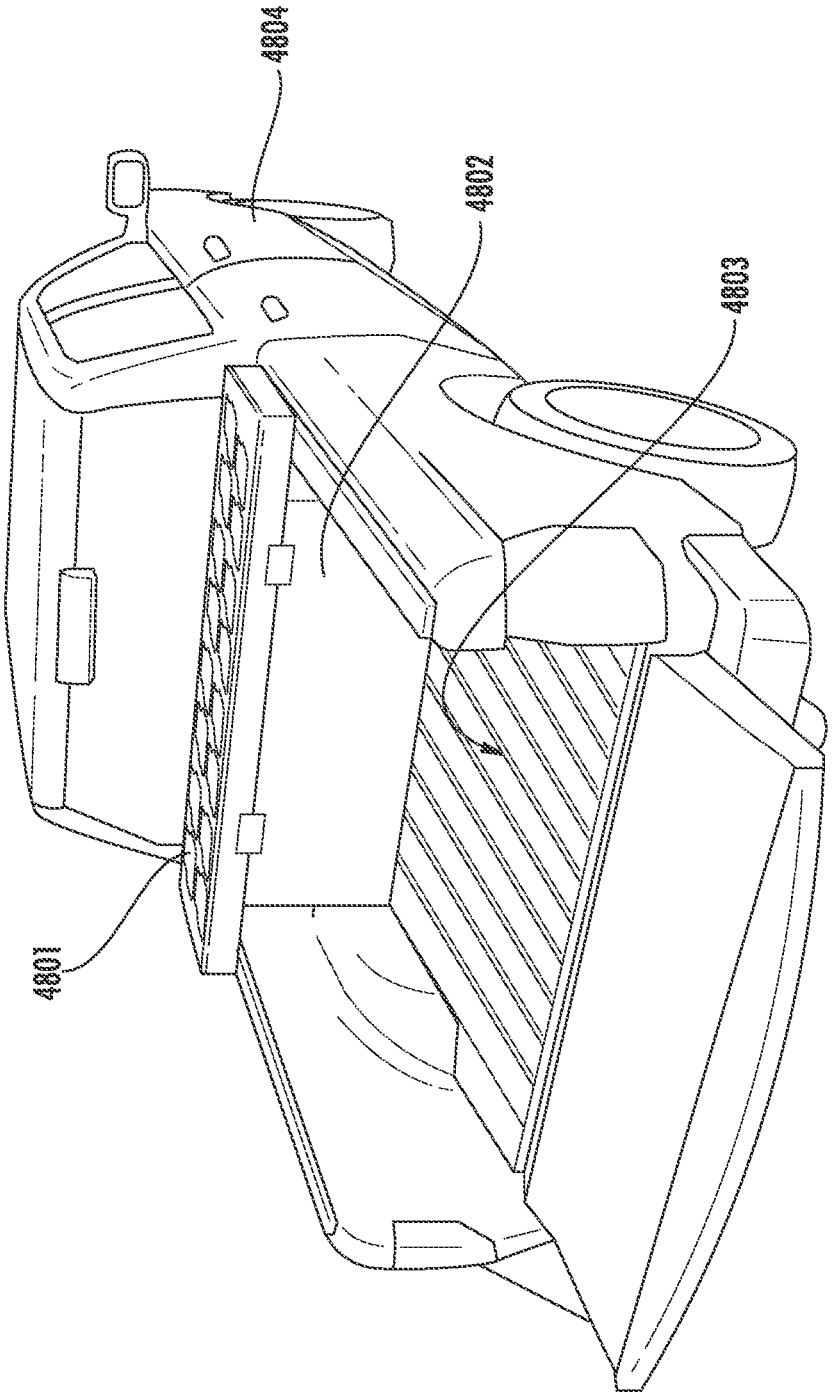

FIG. 48

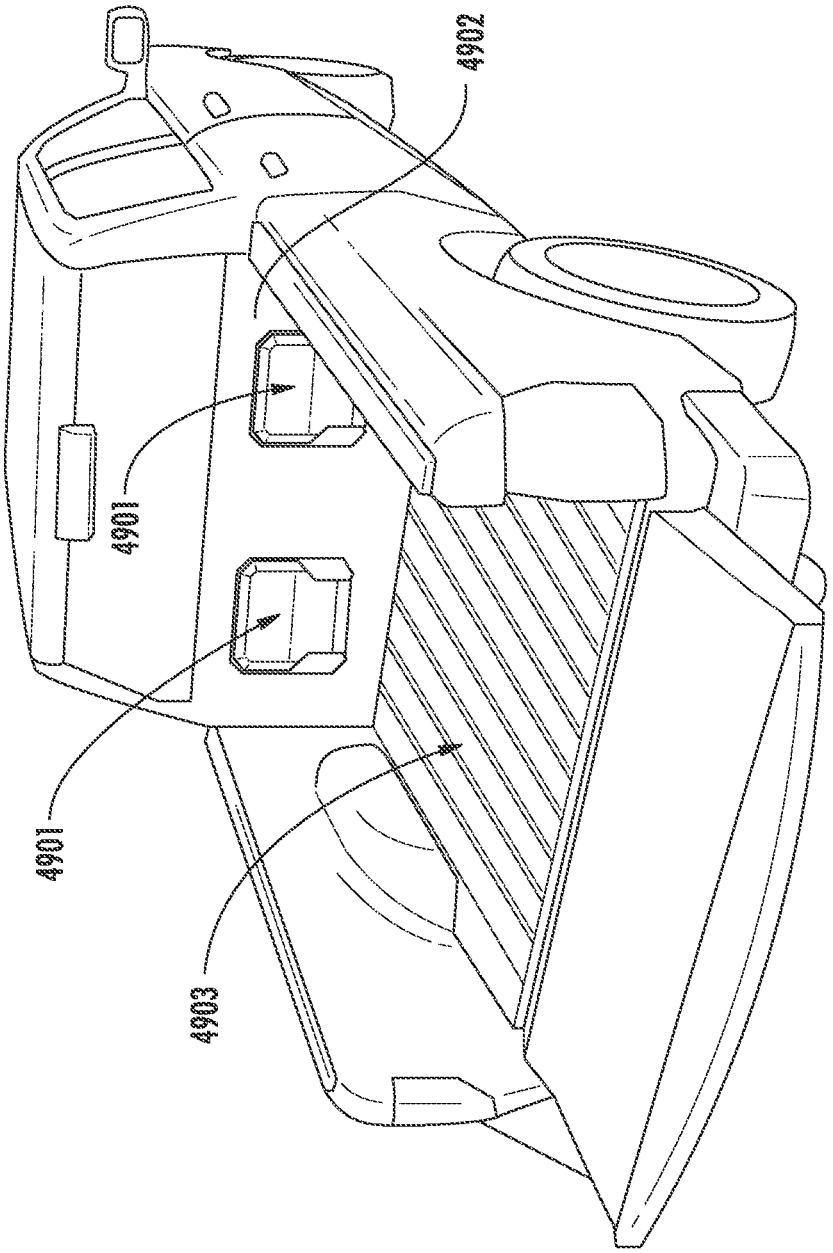

FIG. 49

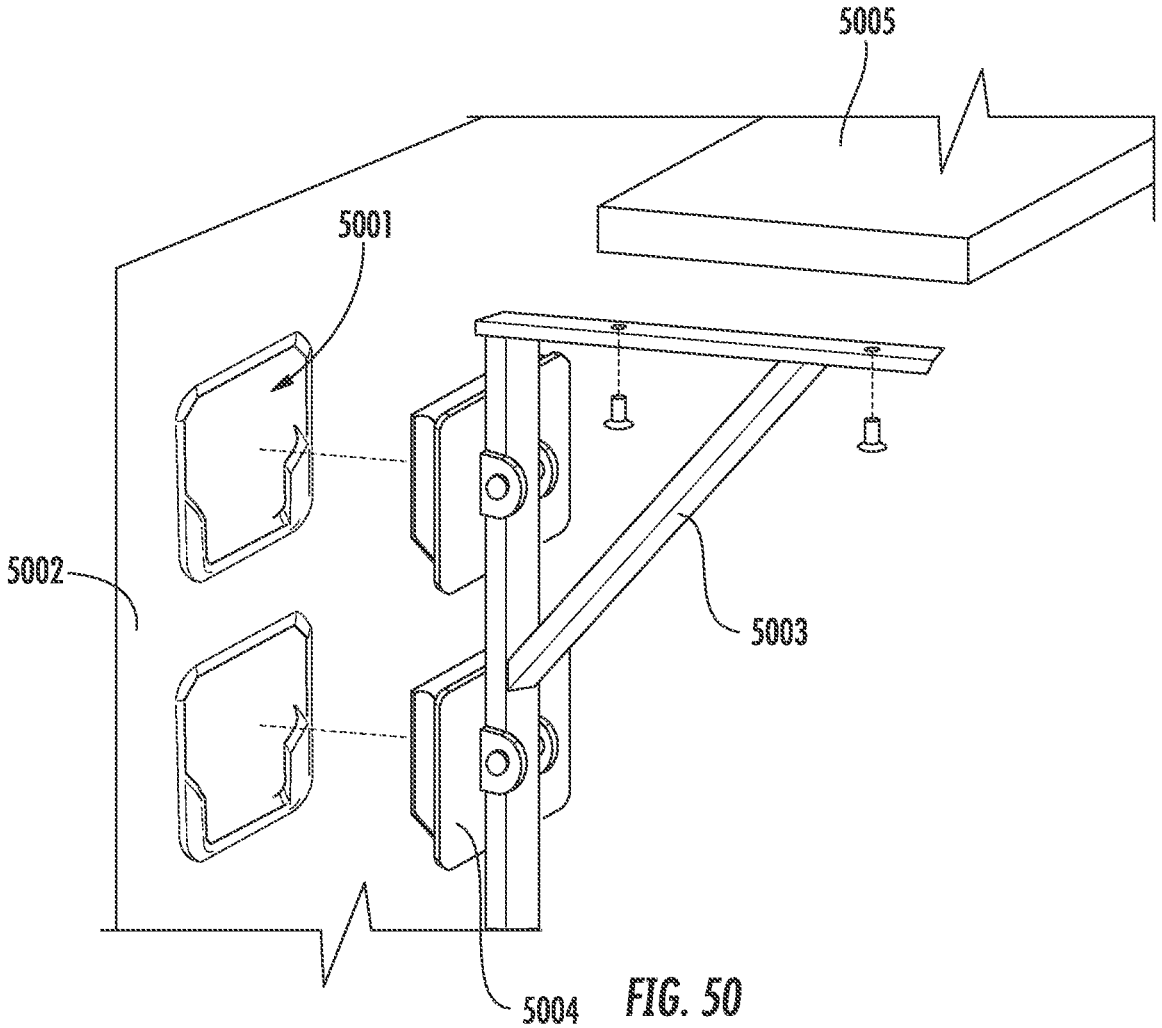

FIG. 50

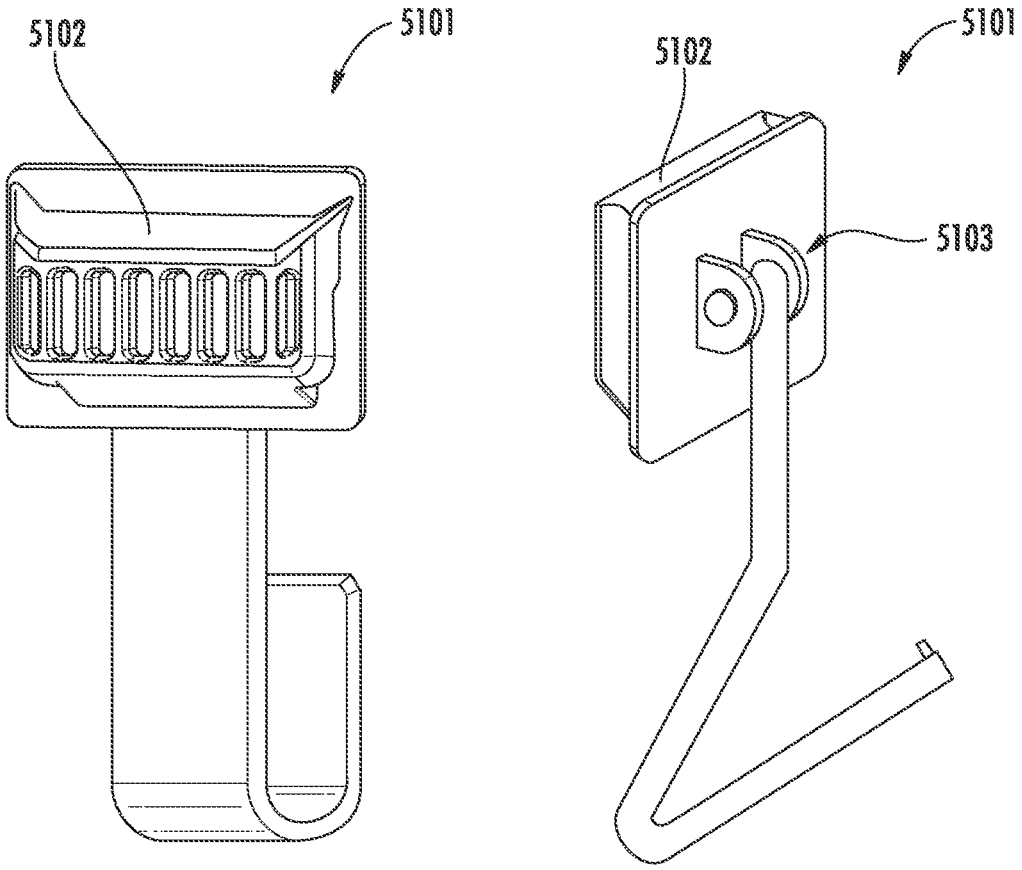

FIG. 51

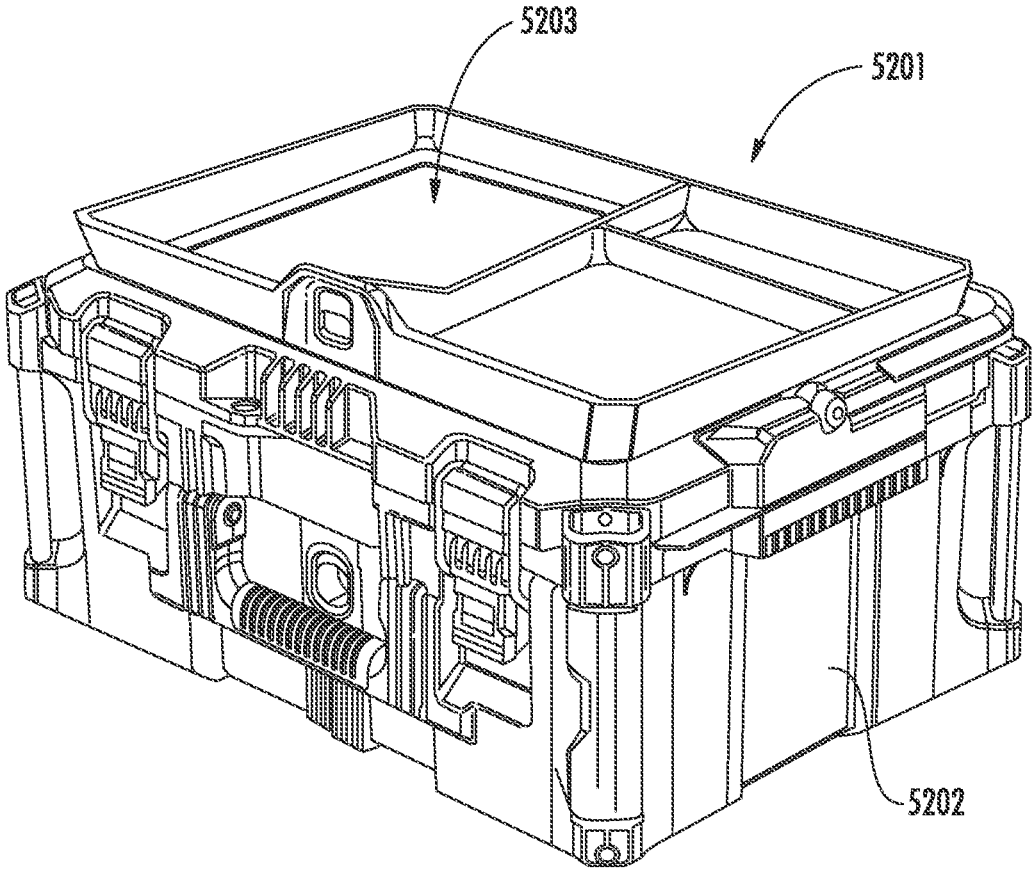

FIG. 52

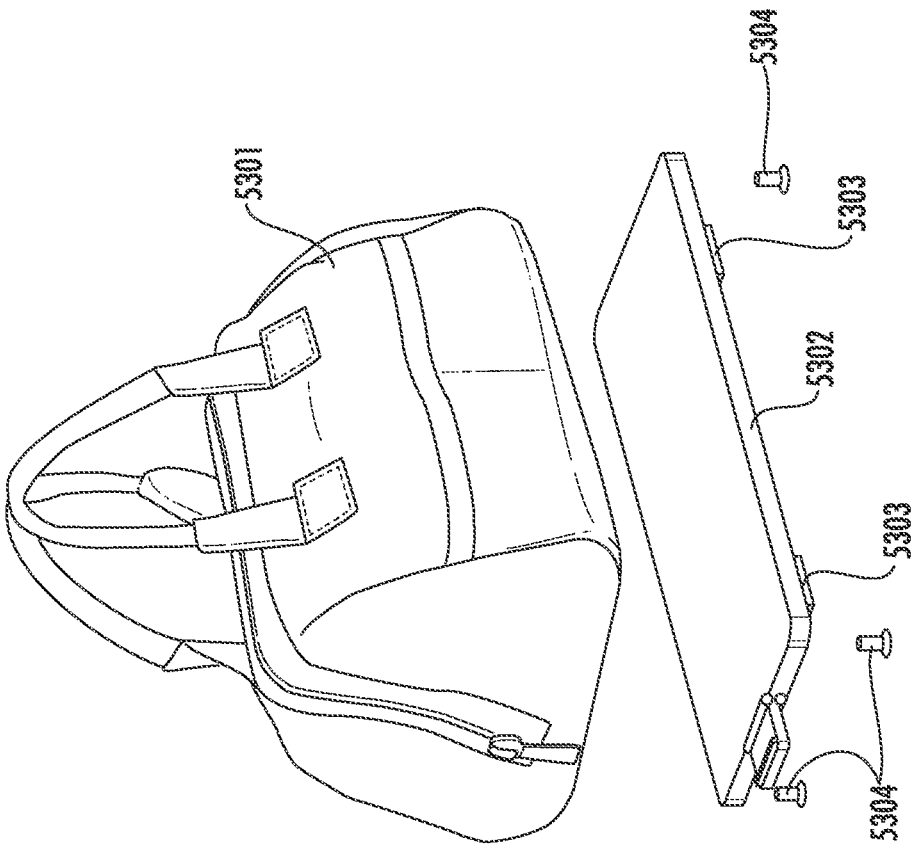

FIG. 53

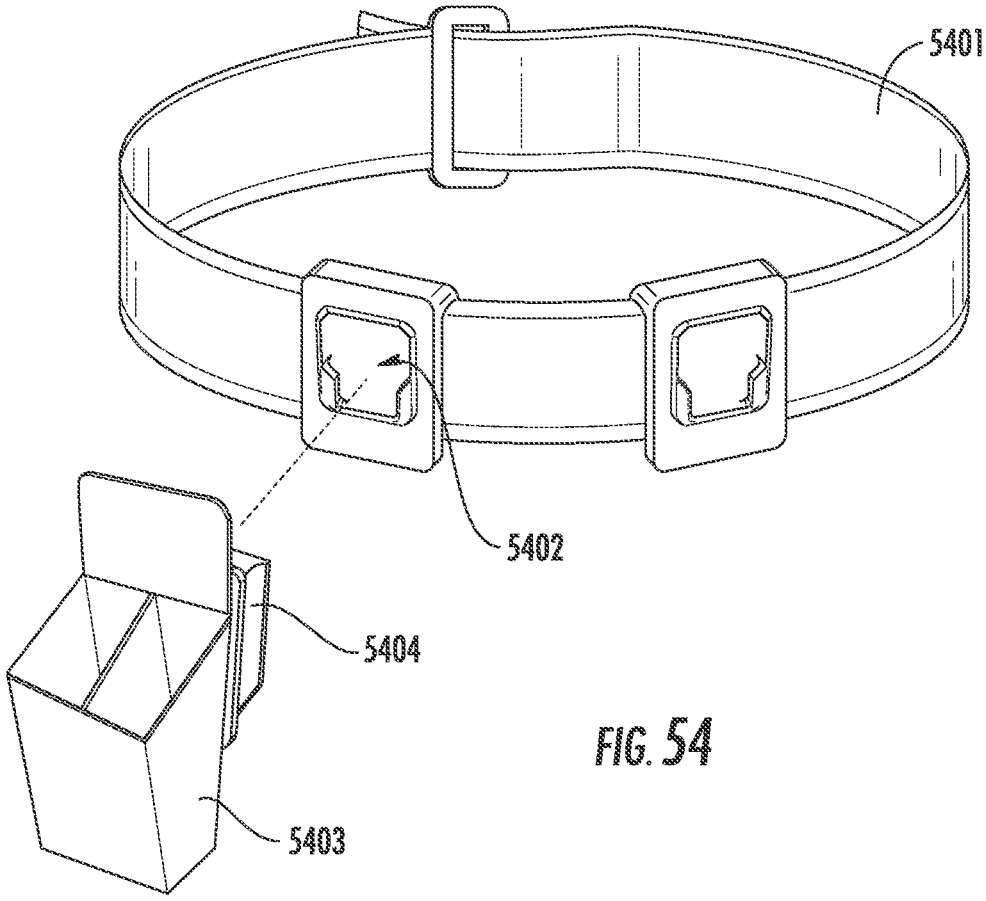

FIG. 54

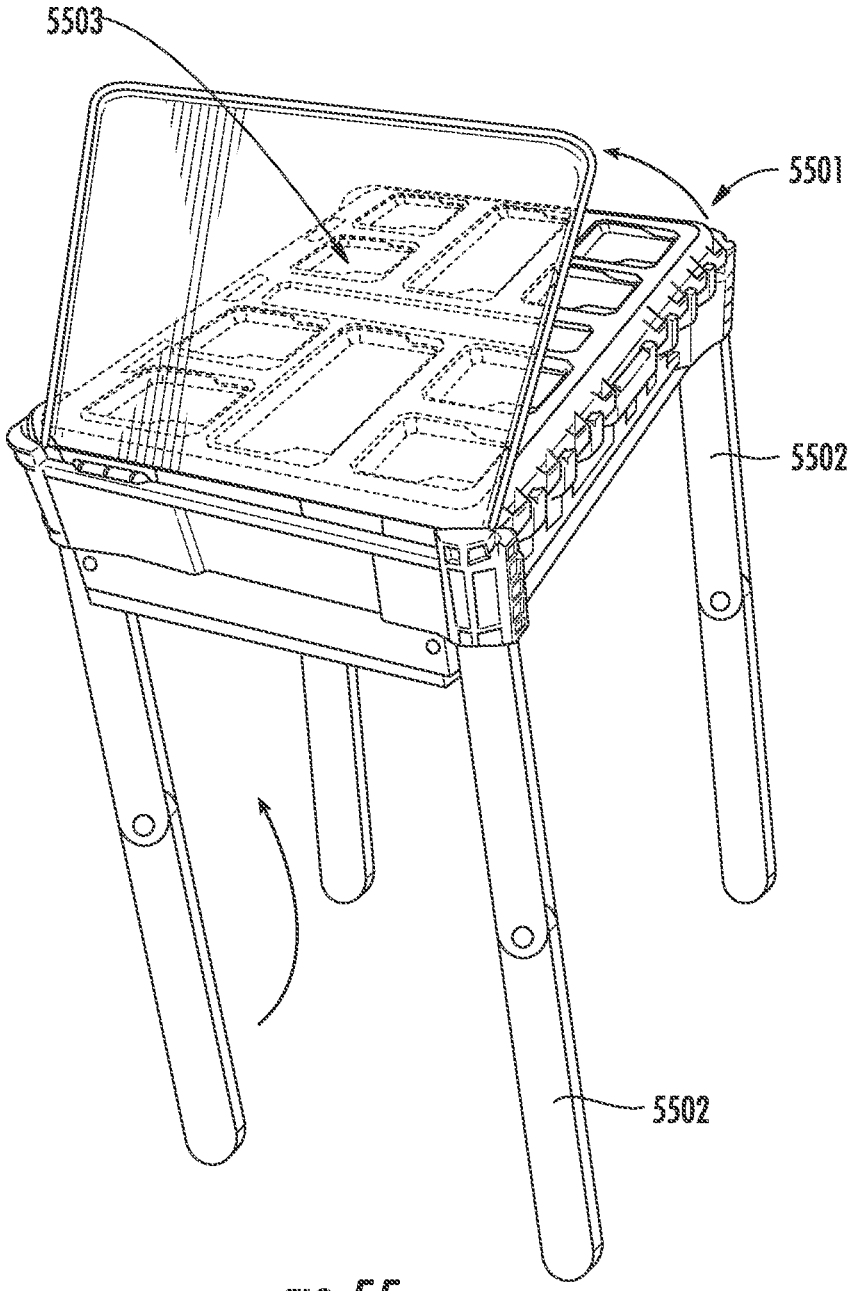

FIG. 55

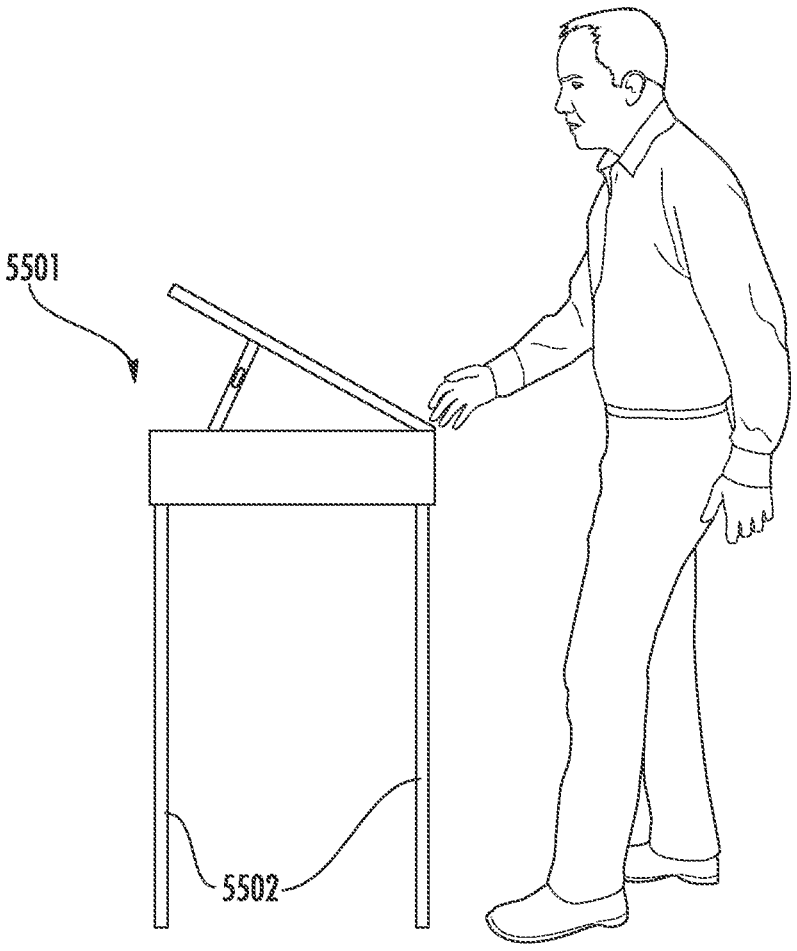

FIG. 56

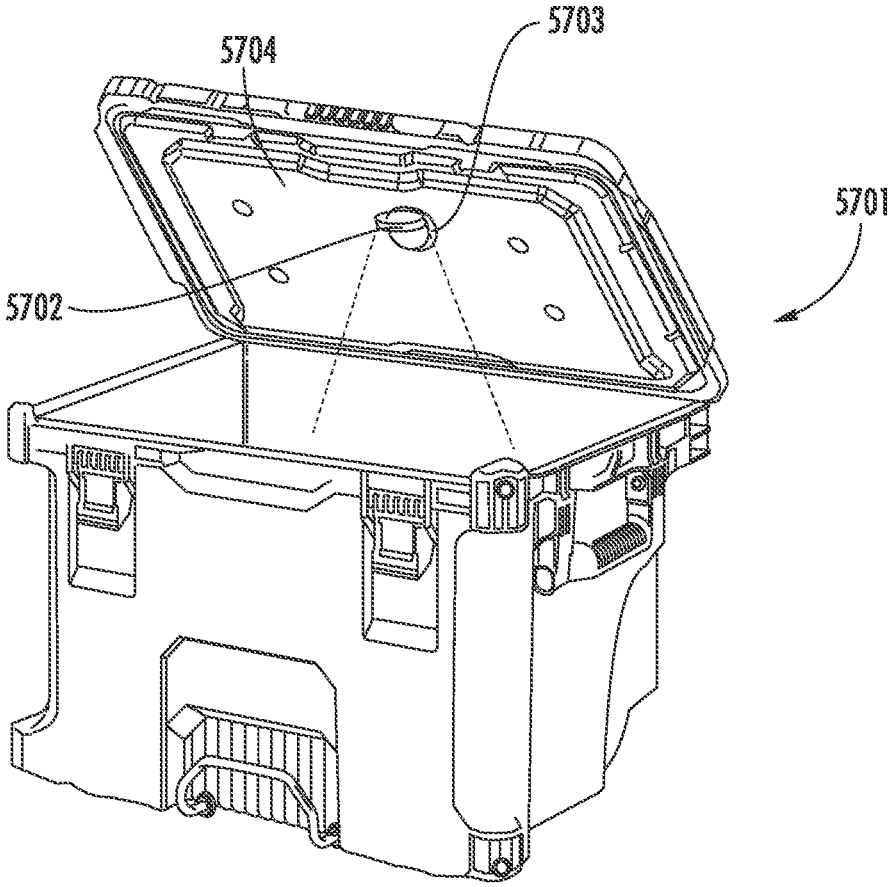

FIG. 57

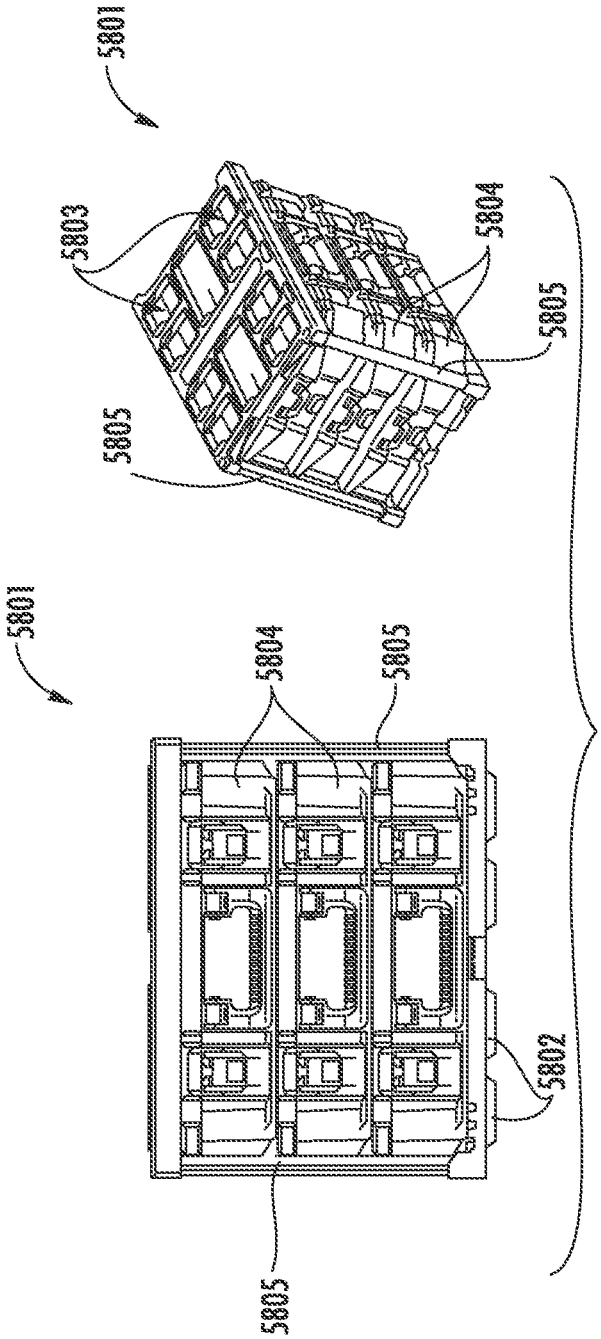

FIG. 58

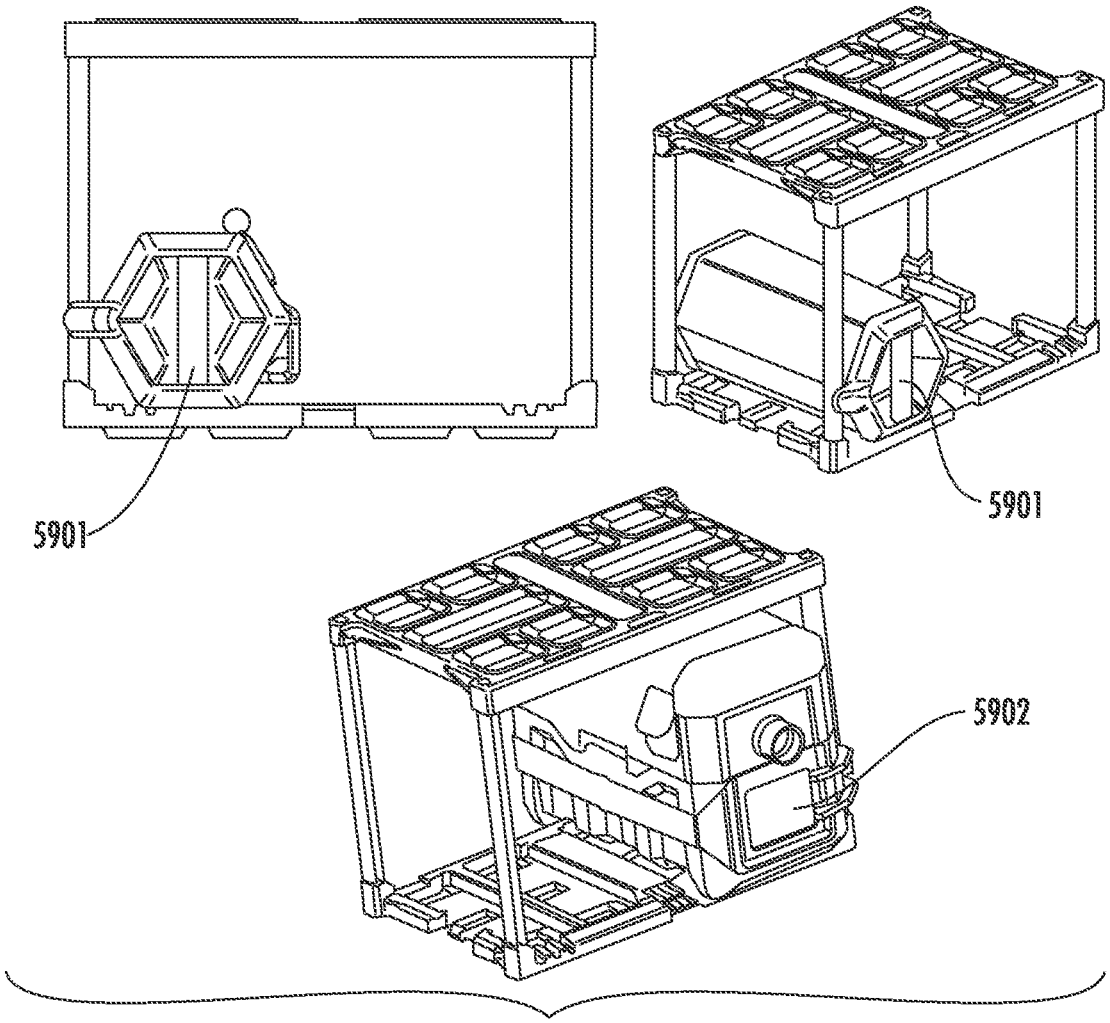

FIG. 59

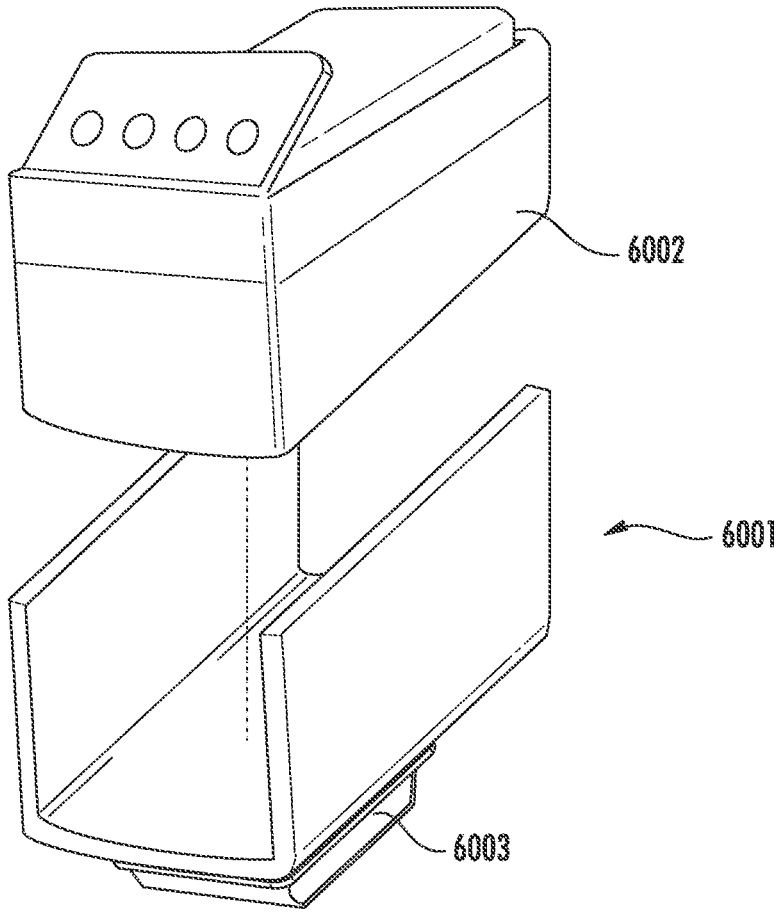

FIG. 60

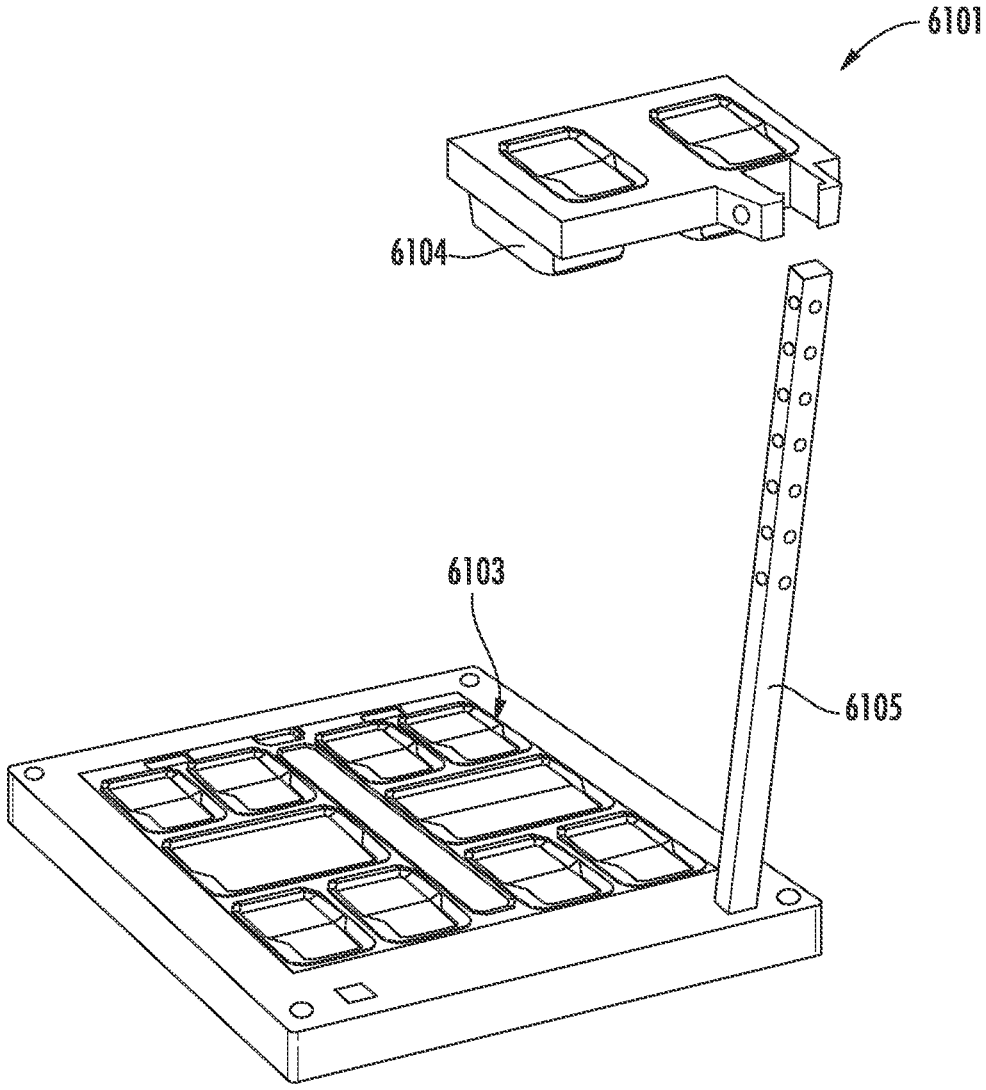

FIG. 61

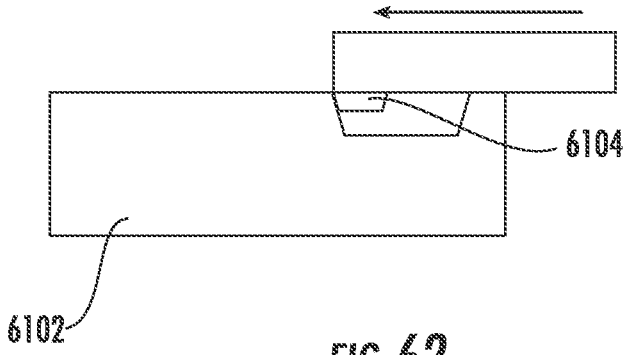

FIG. 62

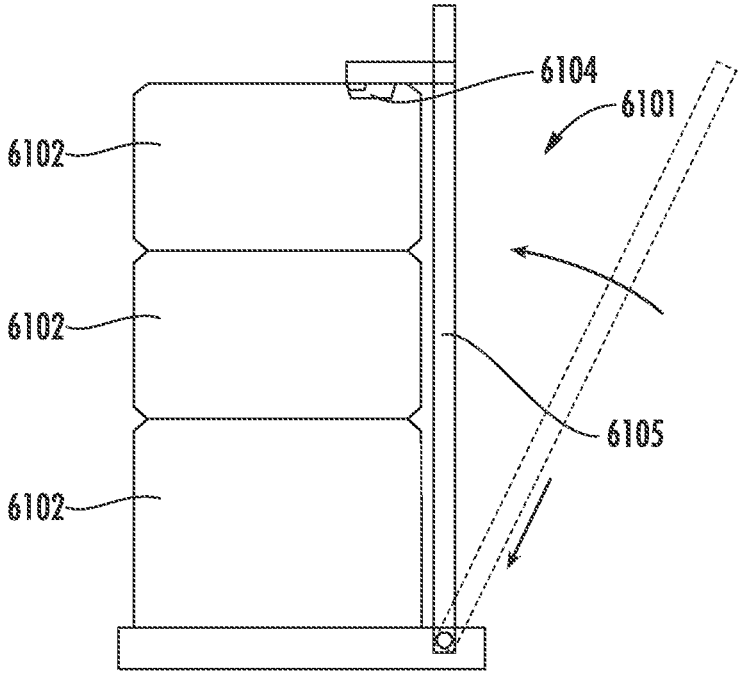

FIG. 63

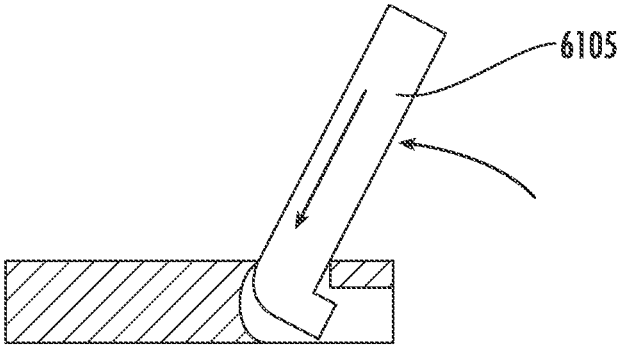

FIG. 64

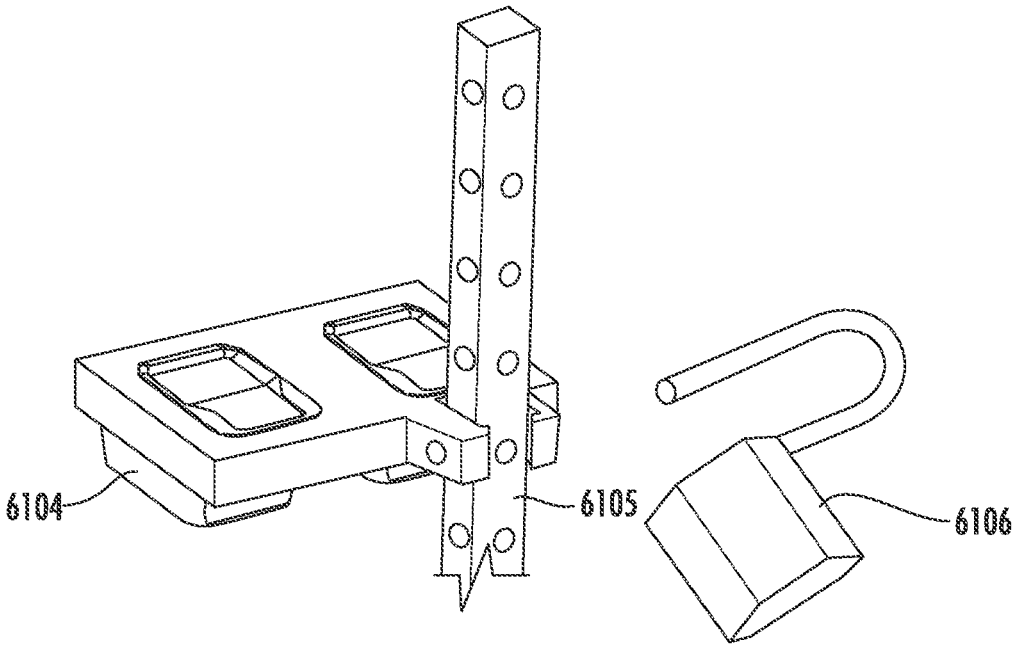

FIG. 65

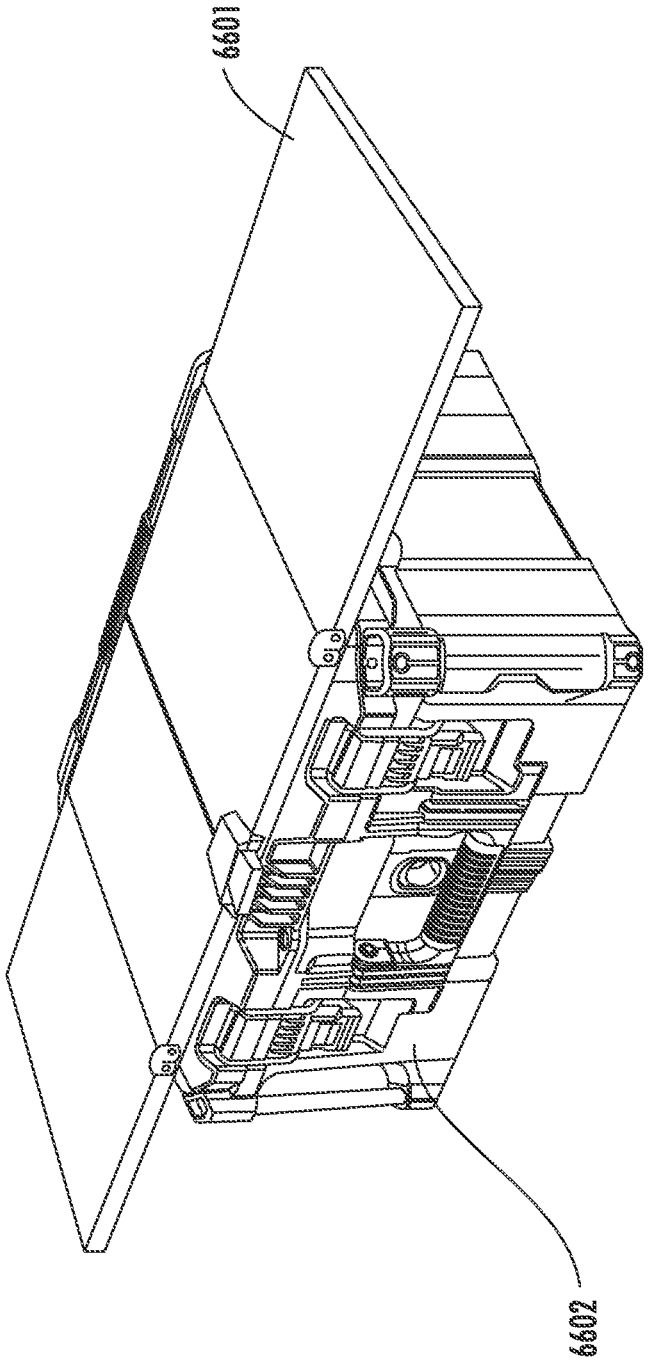

FIG. 66

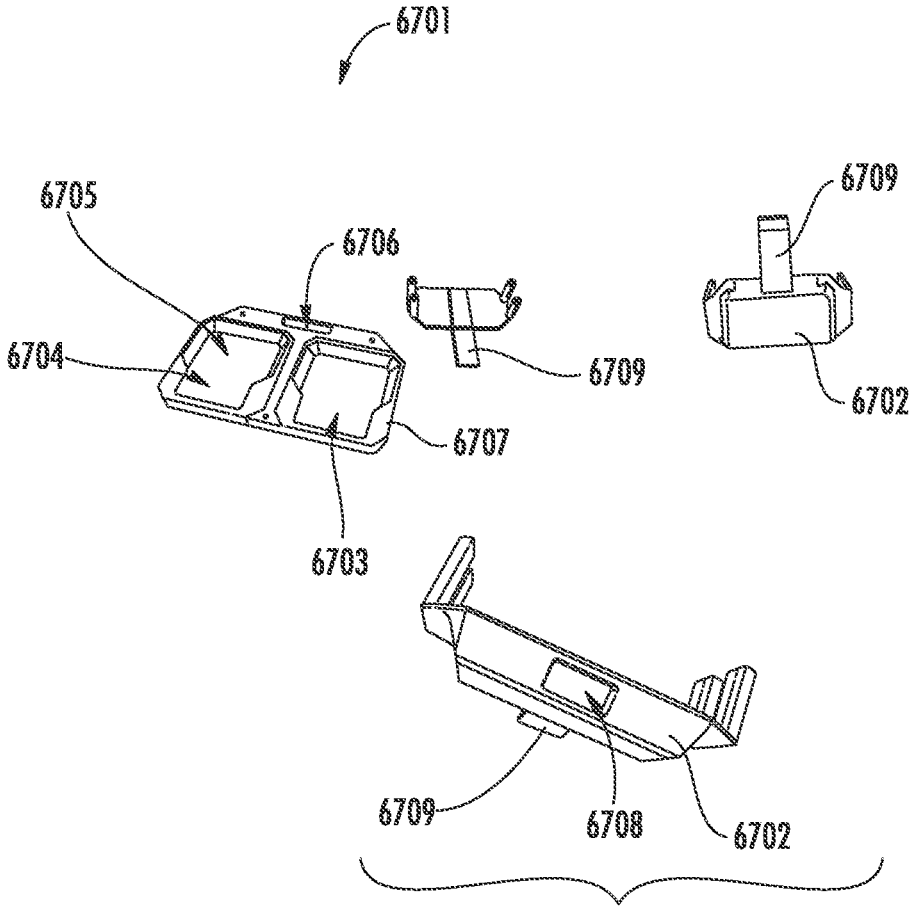

FIG. 67

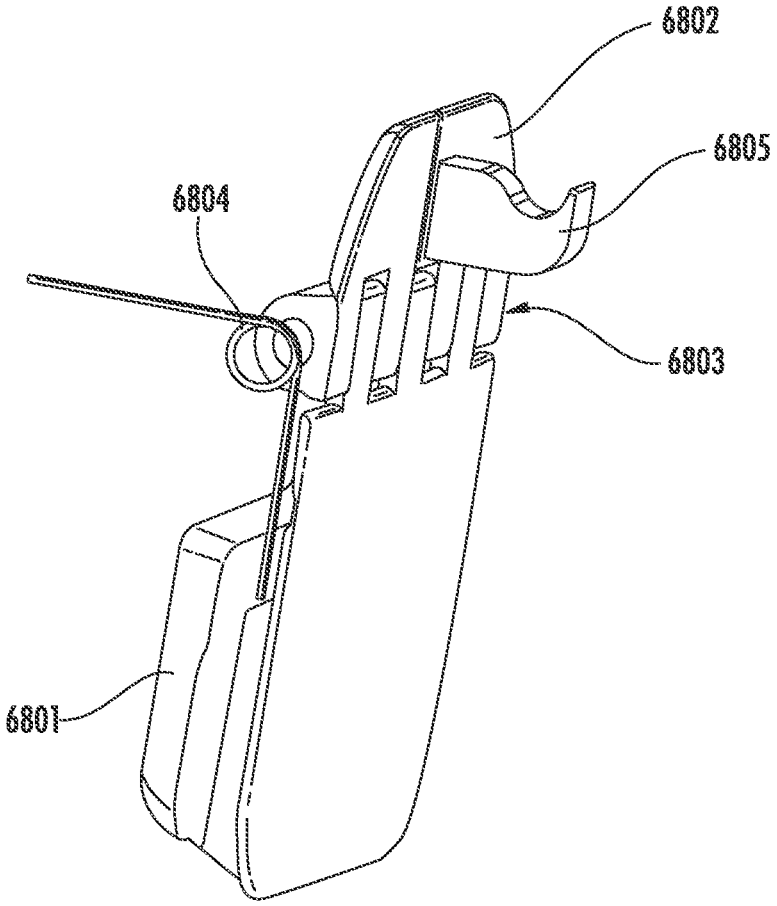

FIG. 68

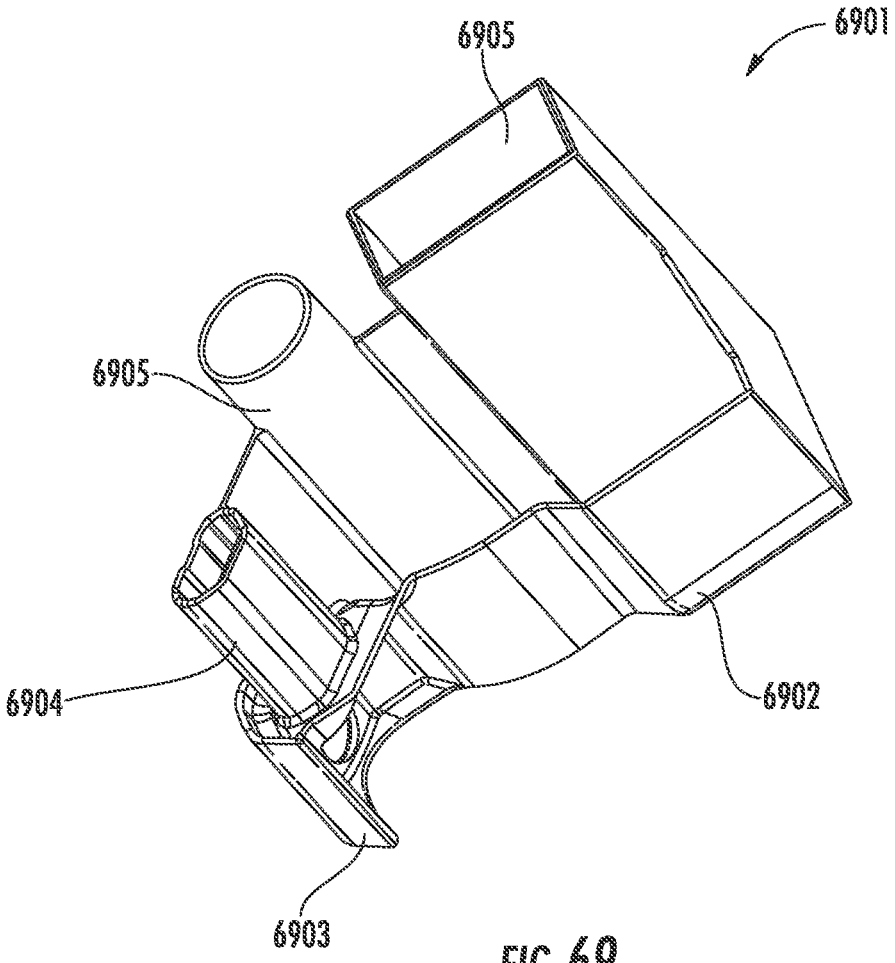

FIG. 69

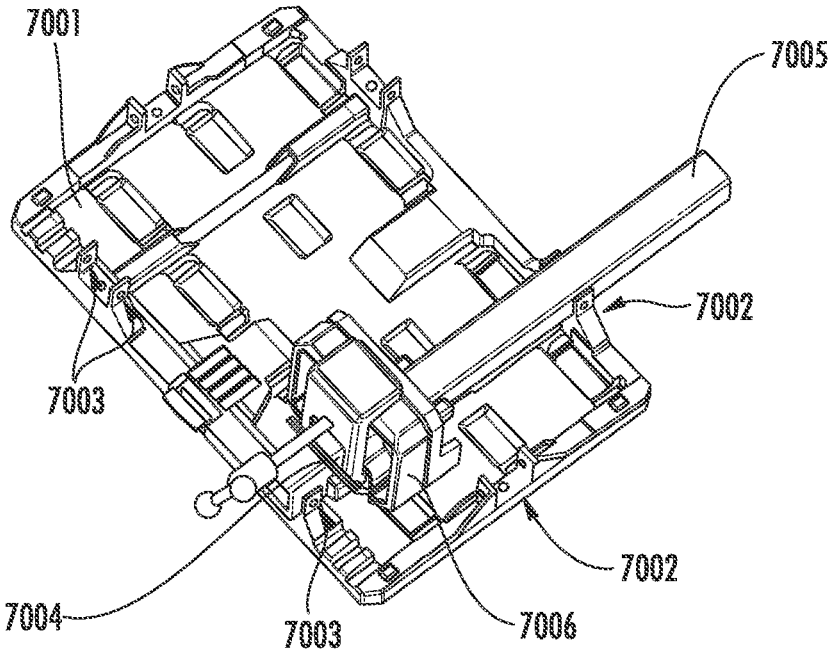

FIG. 70

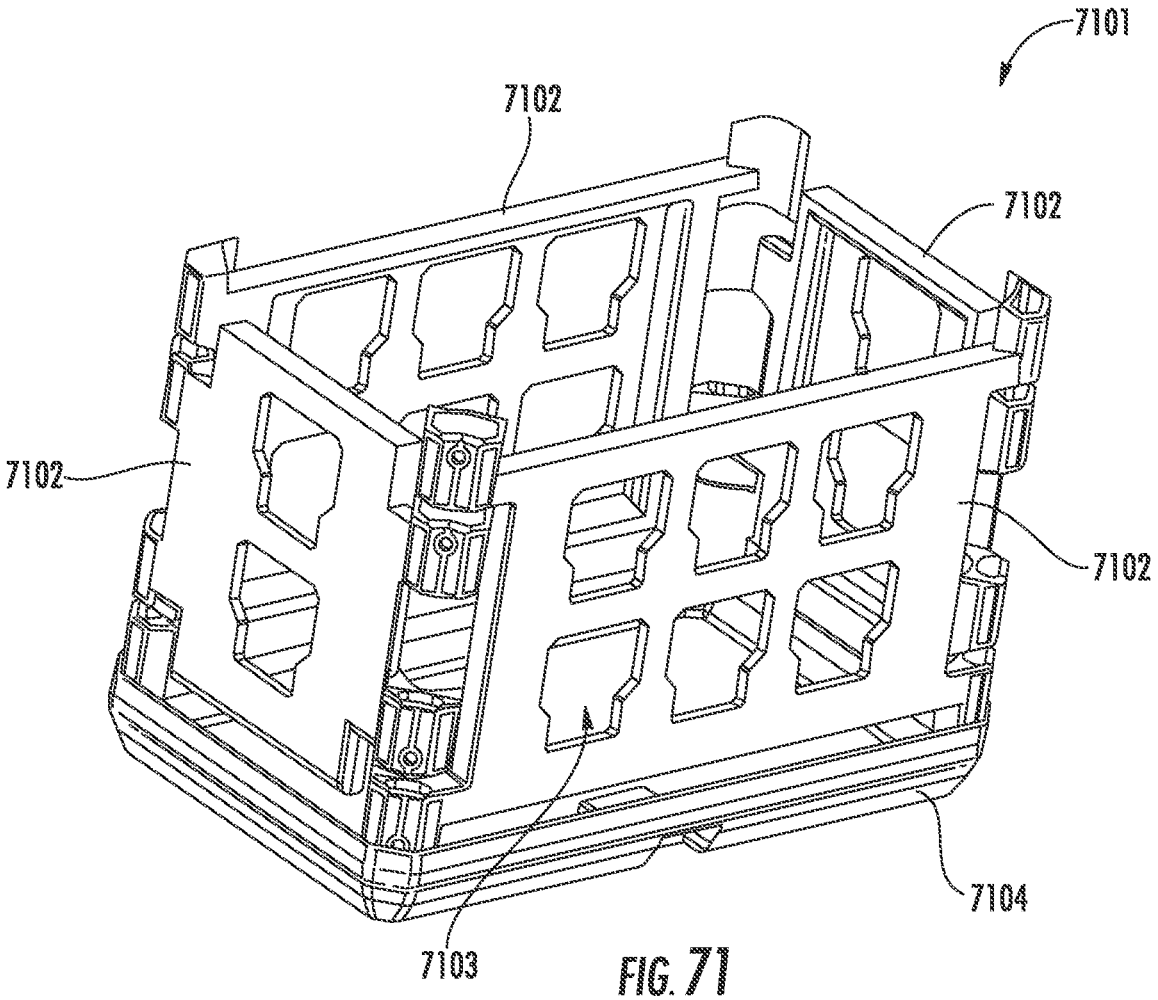

FIG. 71

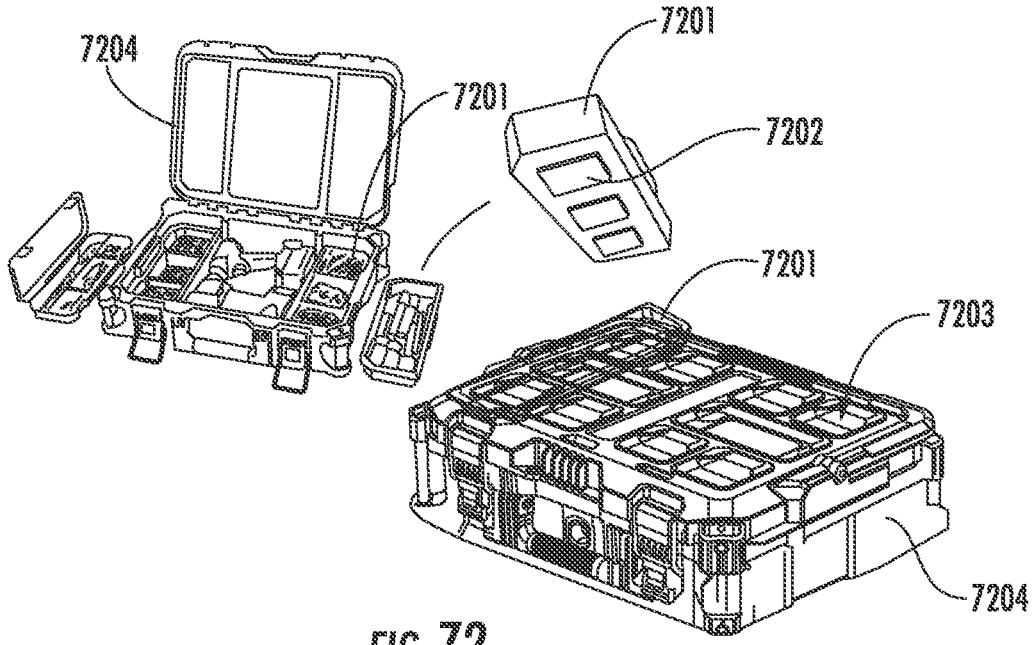

FIG. 72

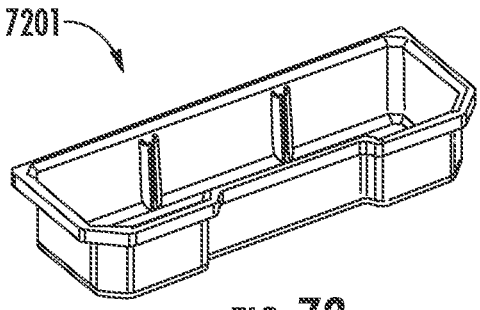

FIG. 73

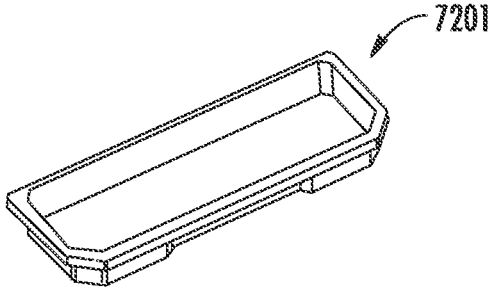

FIG. 74

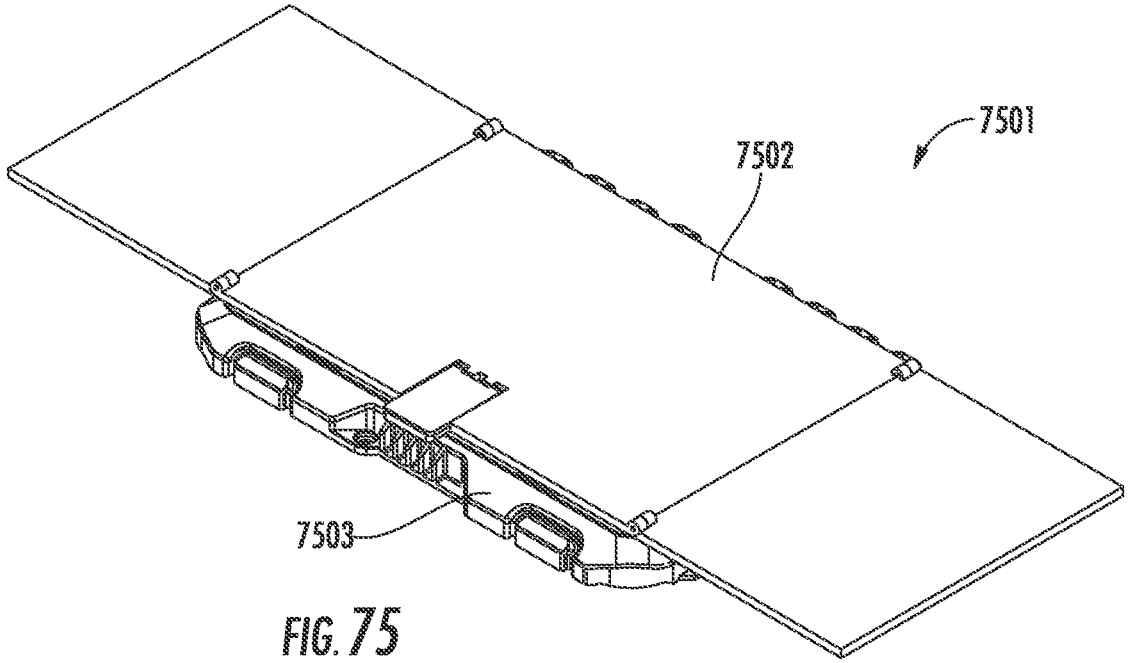

FIG. 75

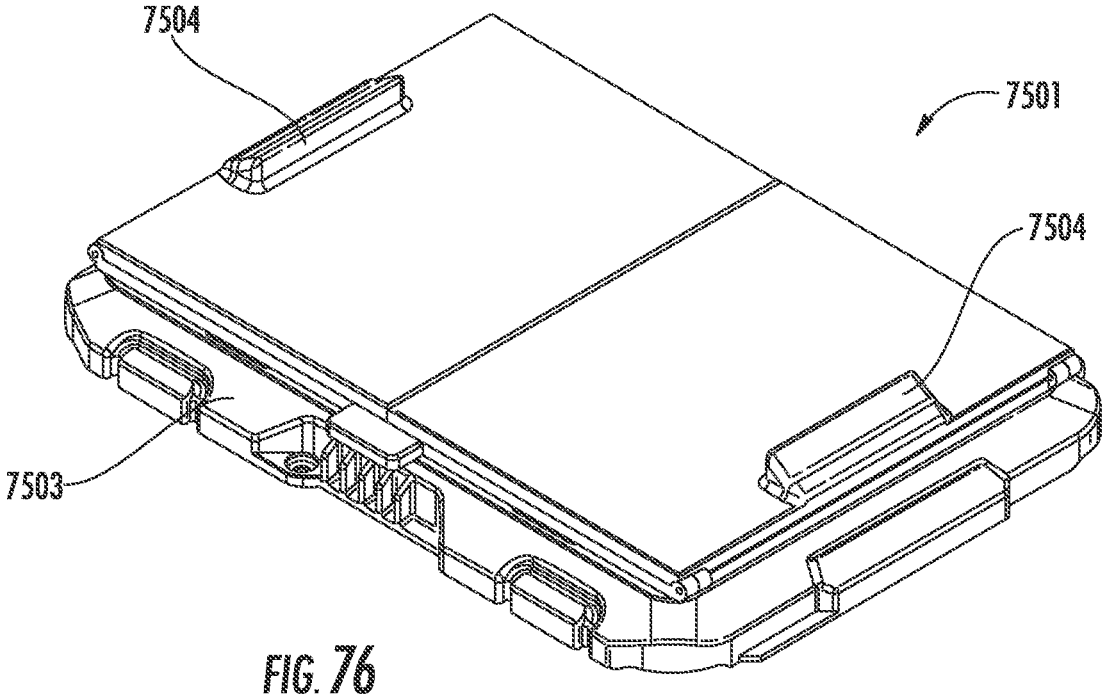

FIG. 76

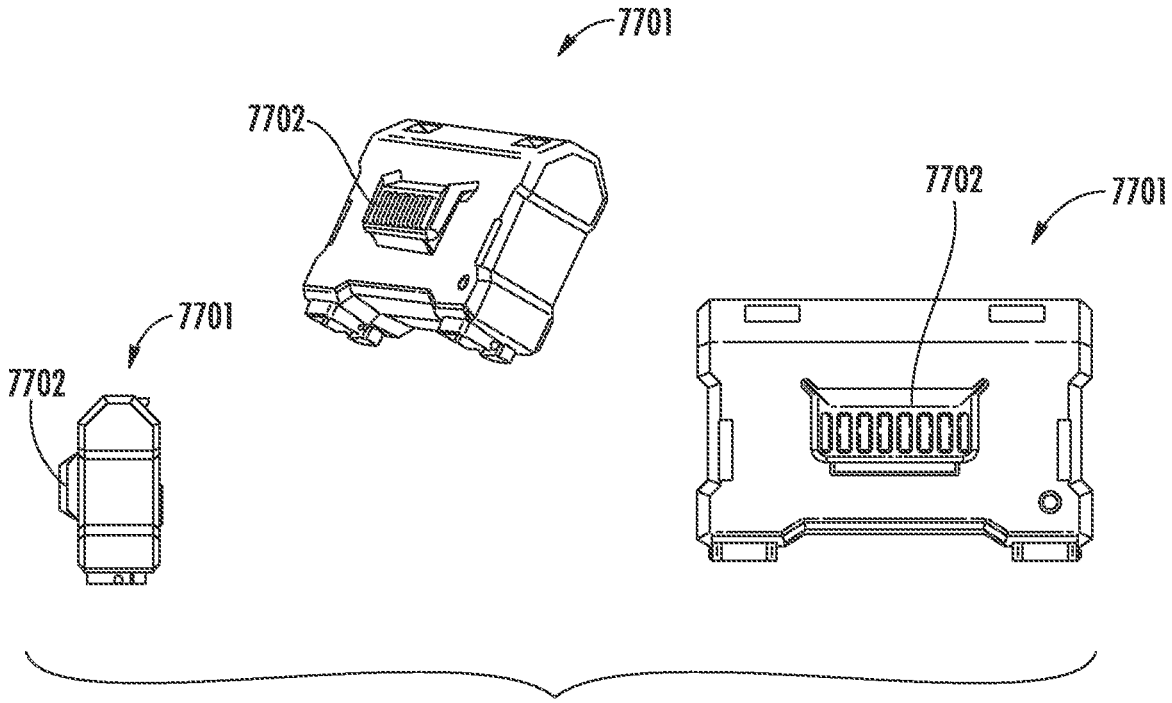

FIG. 77

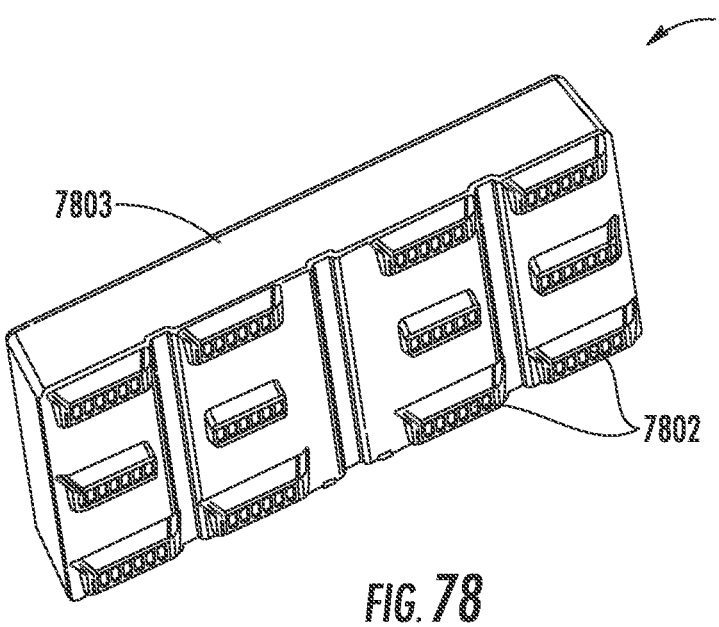

FIG. 78

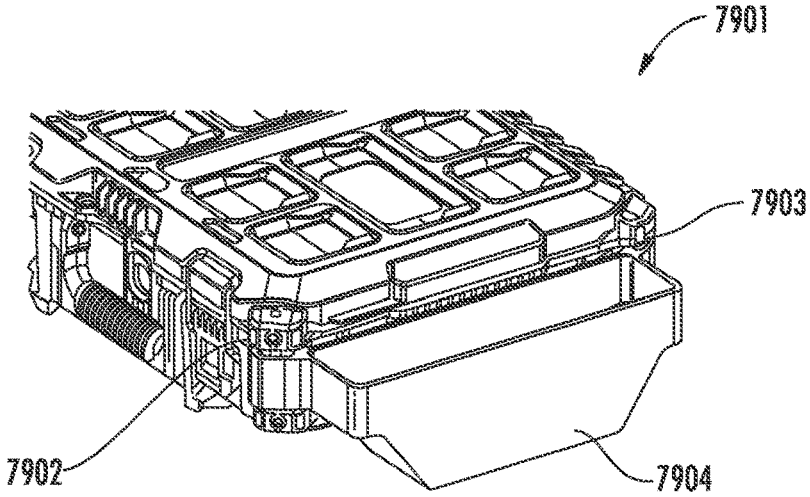

FIG. 79

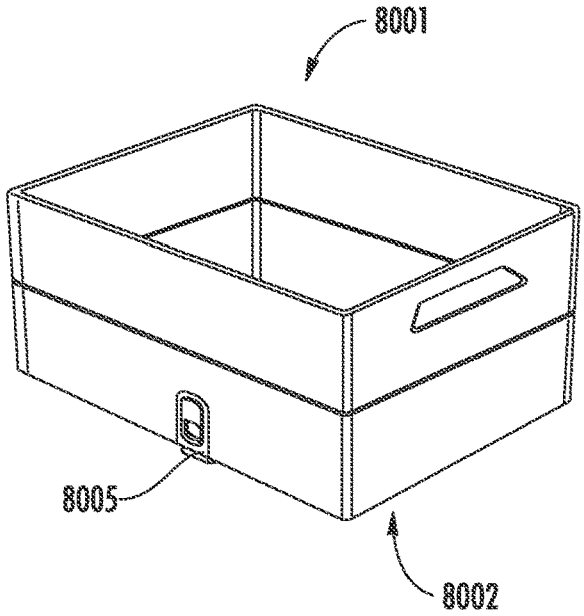

FIG. 80

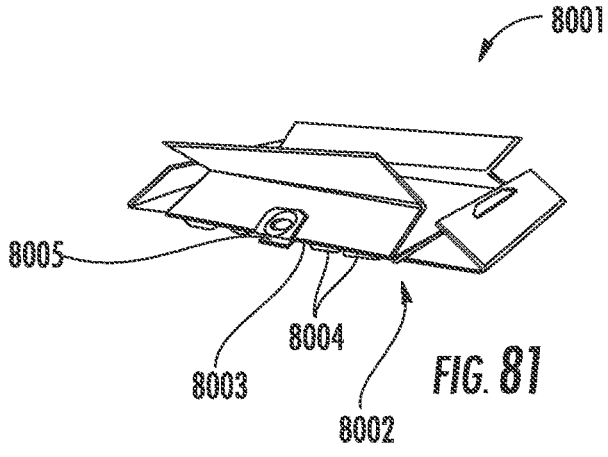

FIG. 81

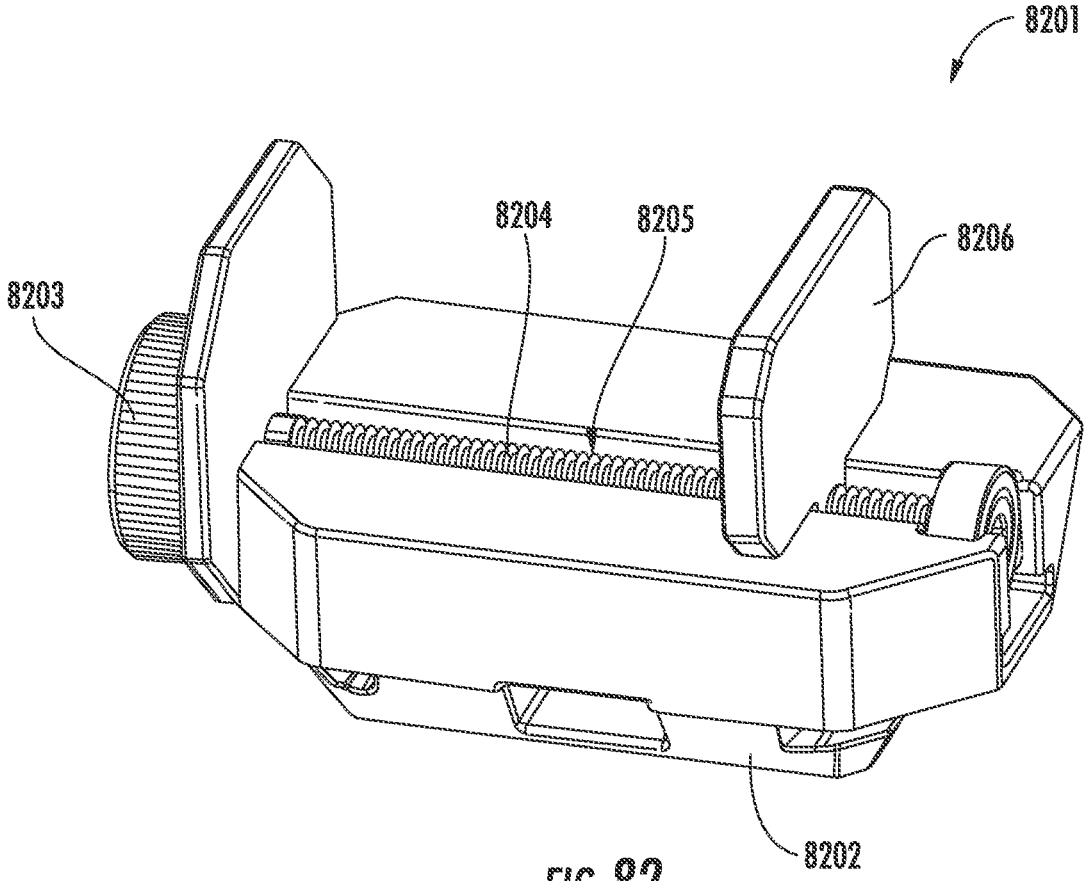

FIG. 82

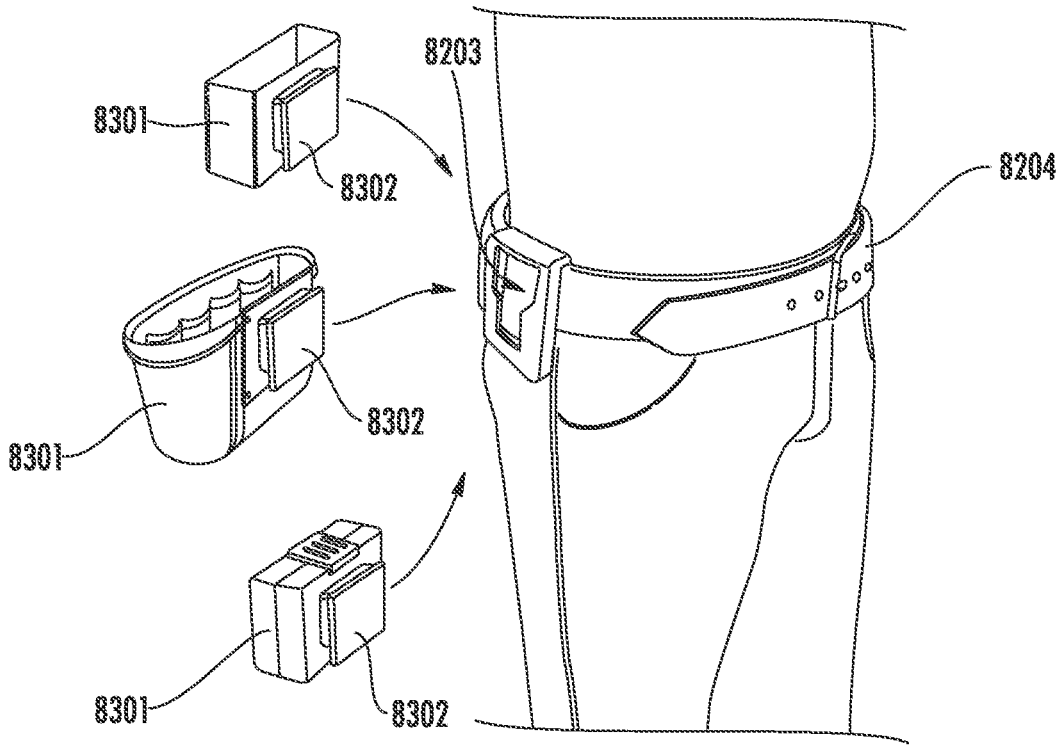

FIG. 83

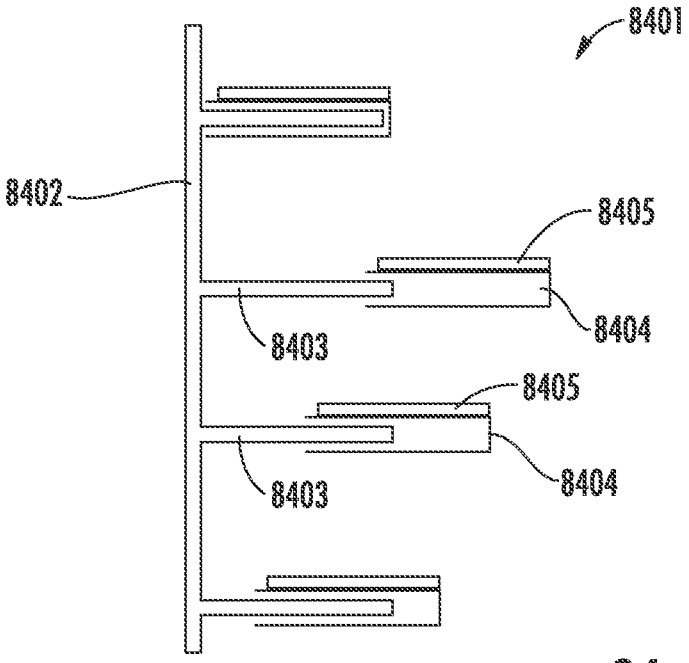

FIG. 84

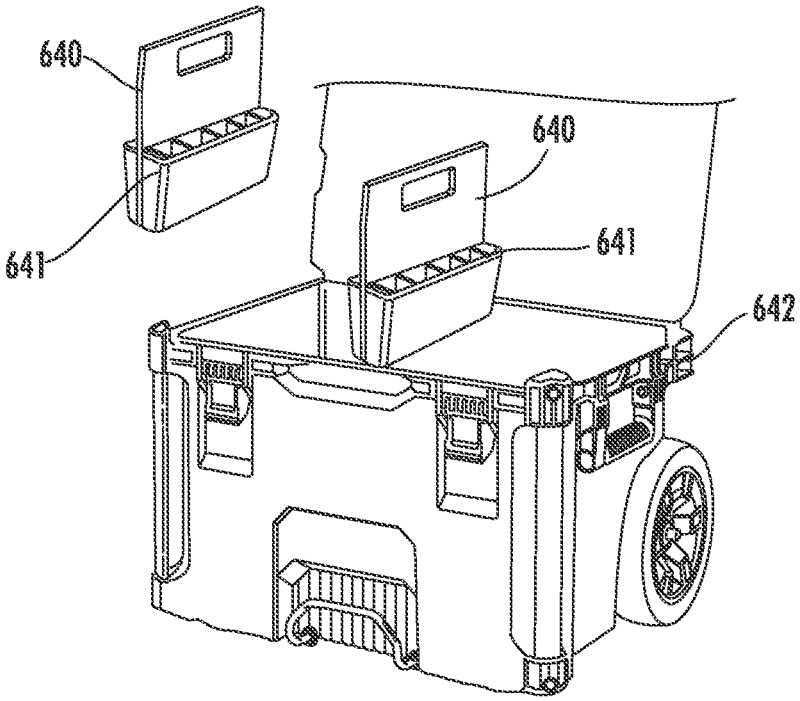

FIG. 85

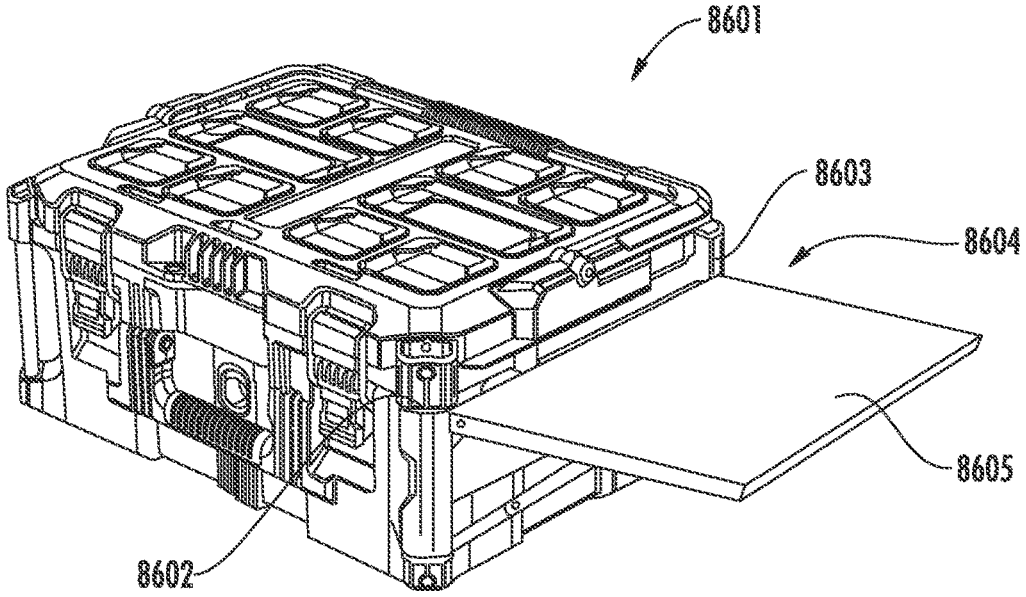

FIG. 86

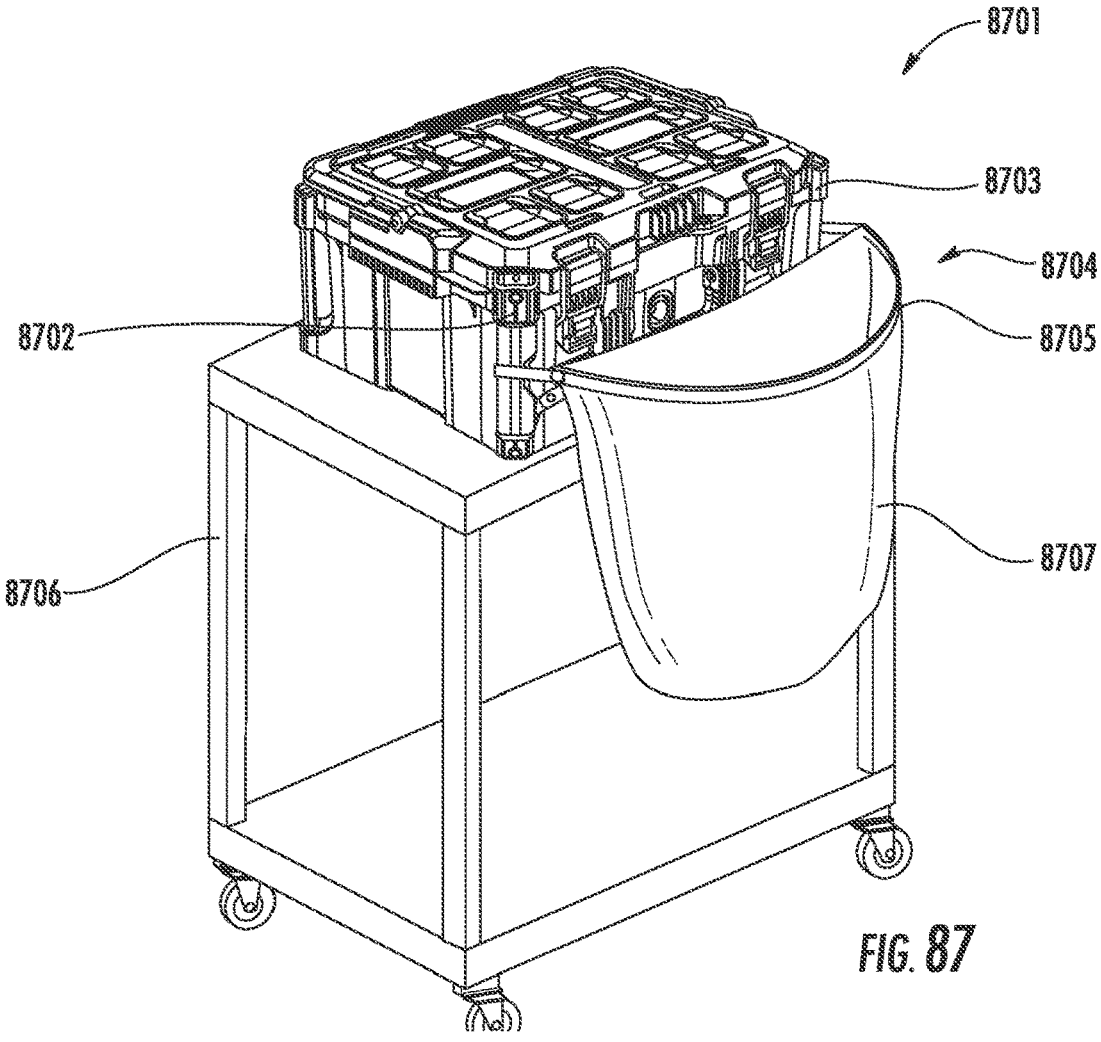

FIG. 87

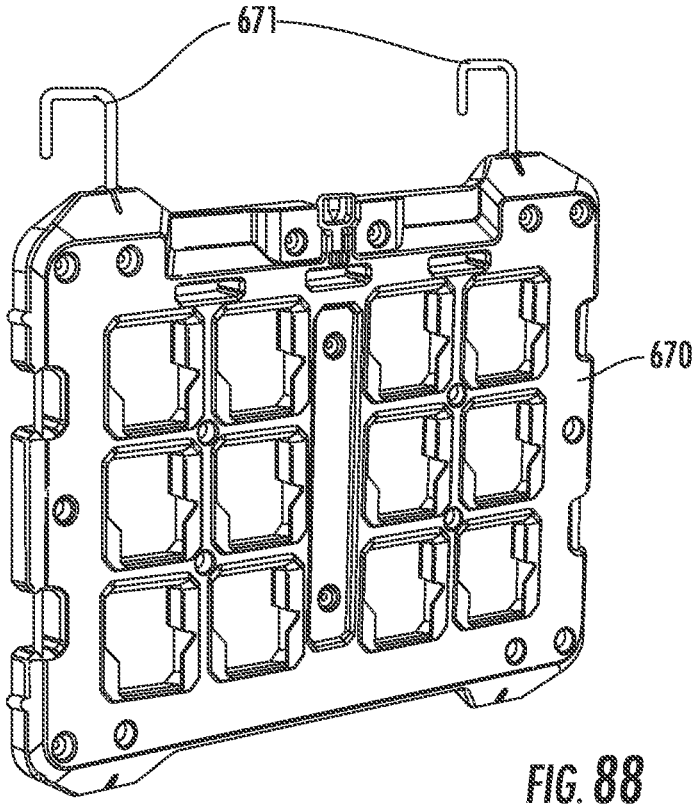

FIG. 88

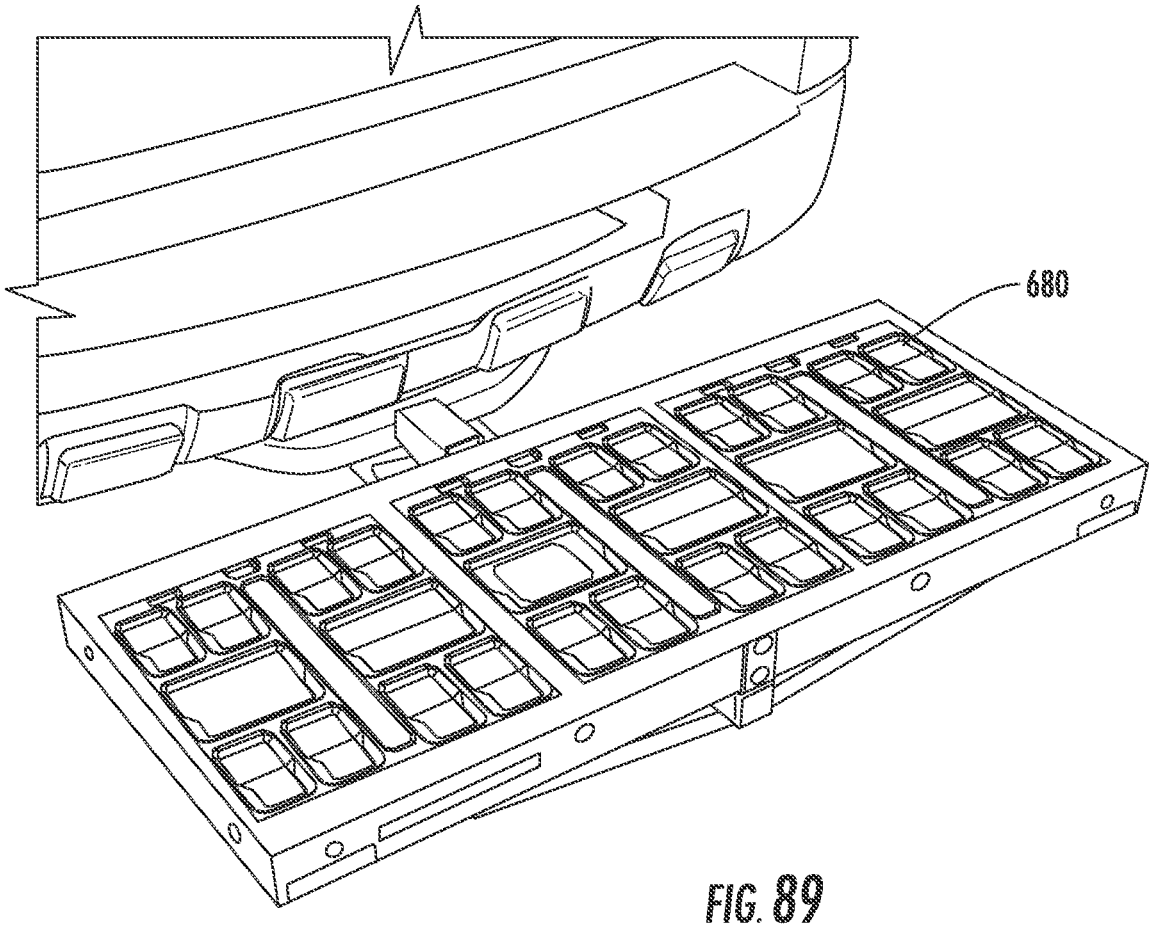

FIG. 89

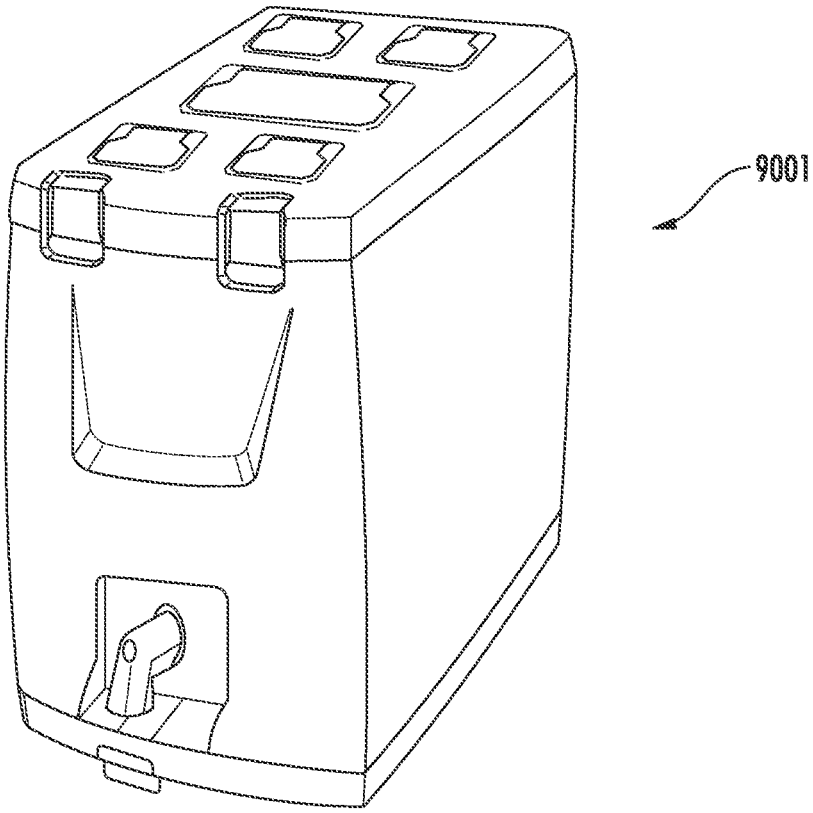

FIG. 90

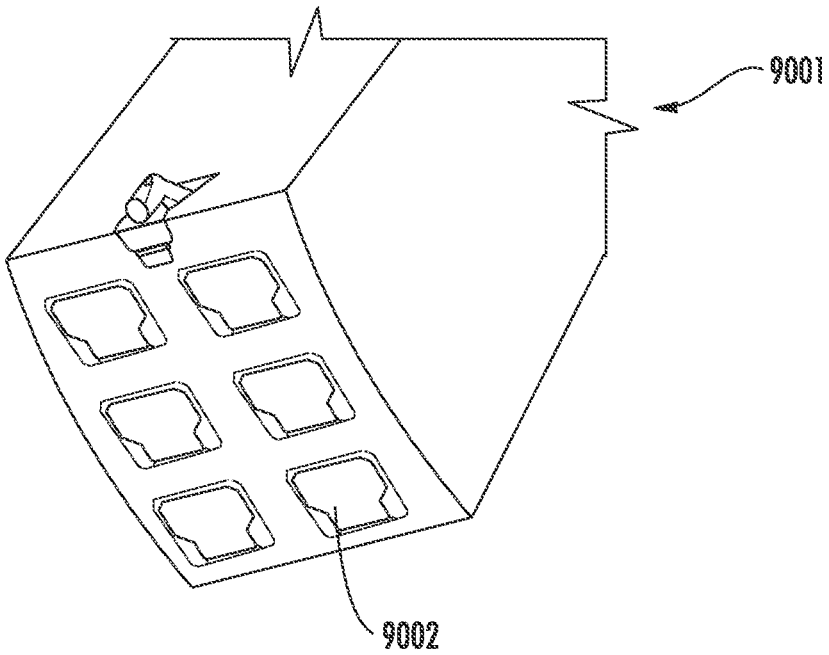

FIG. 91

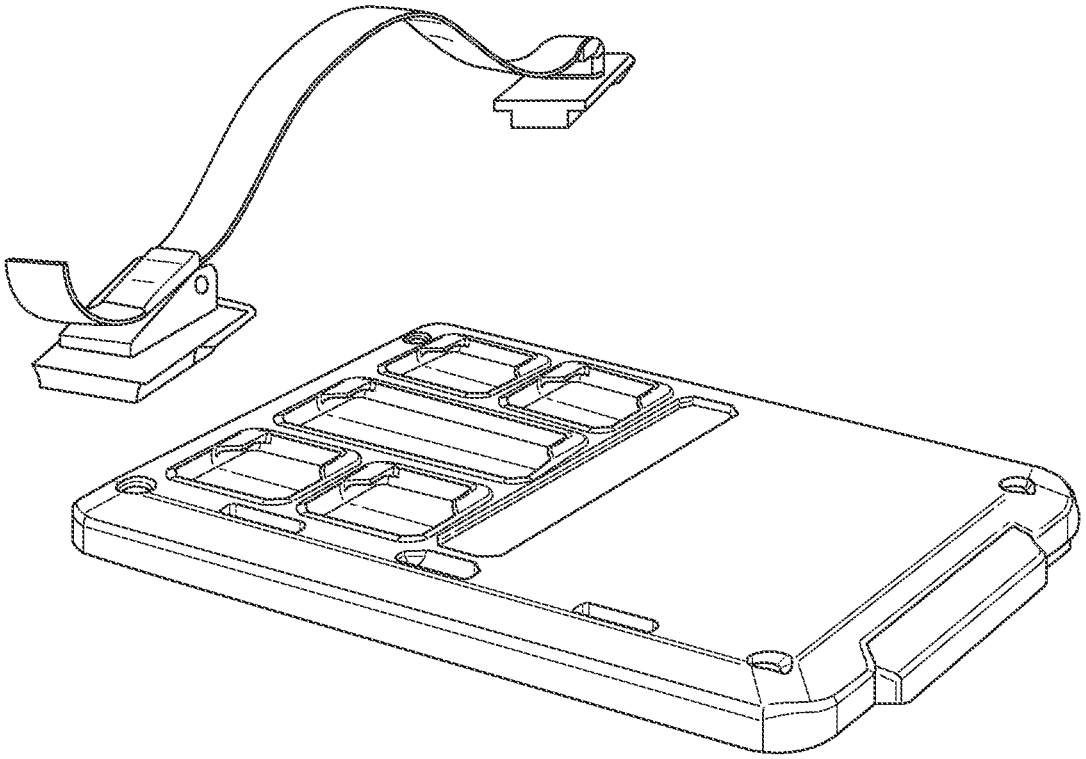

FIG. 92

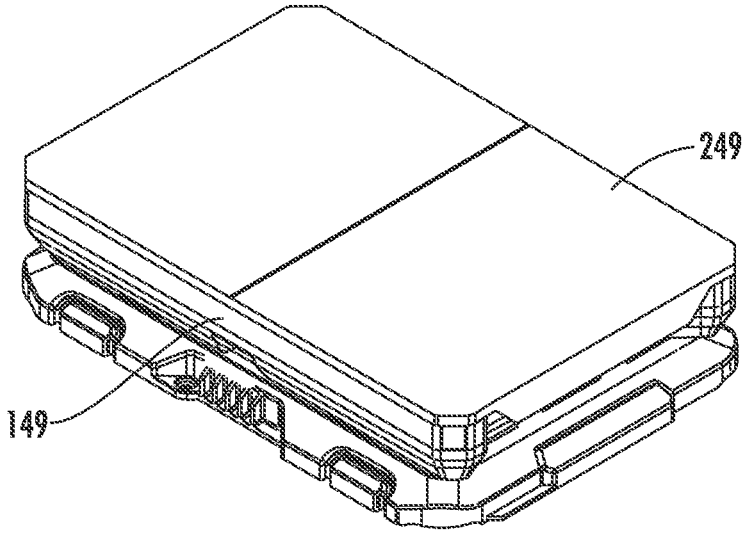

FIG. 93

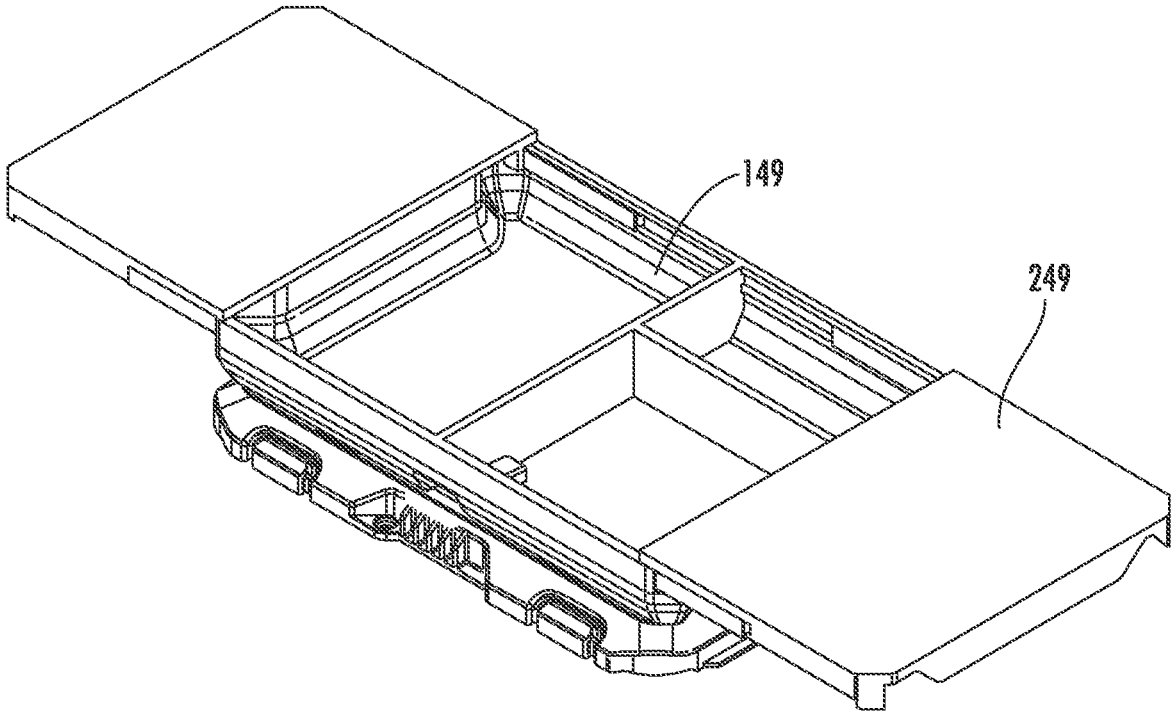

FIG. 94

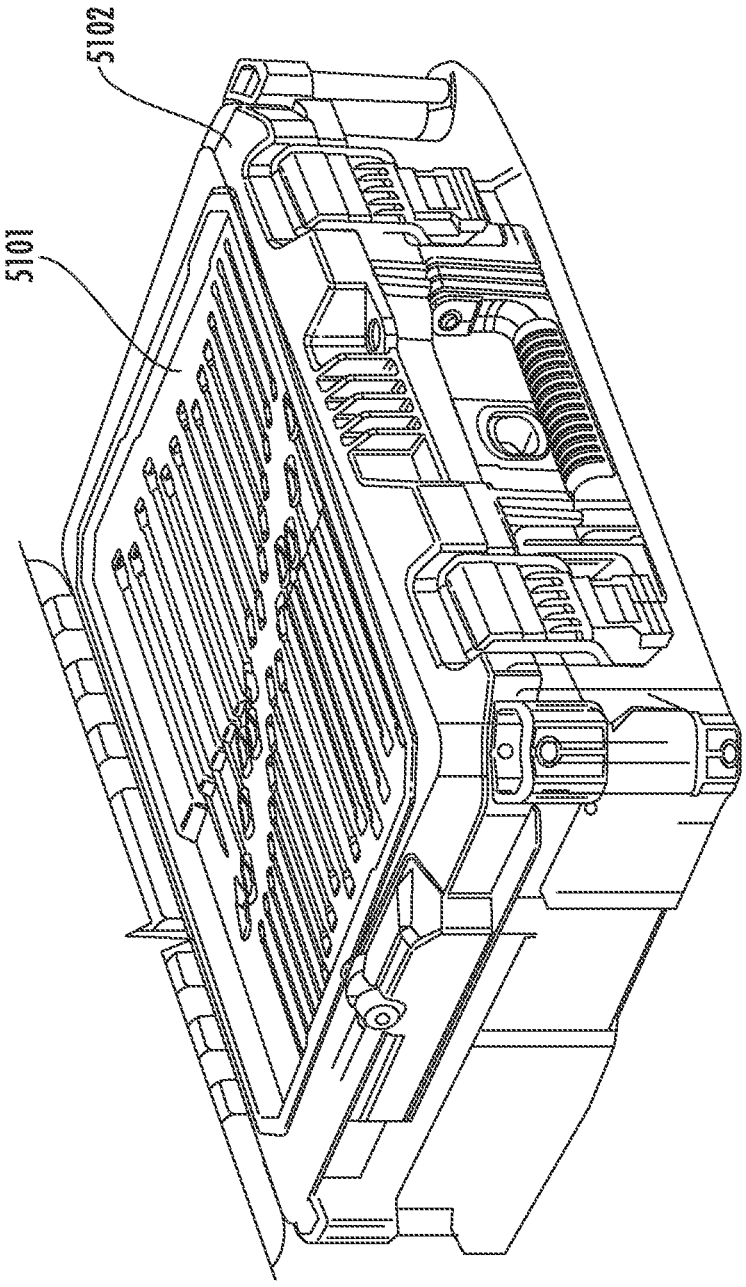

FIG. 95

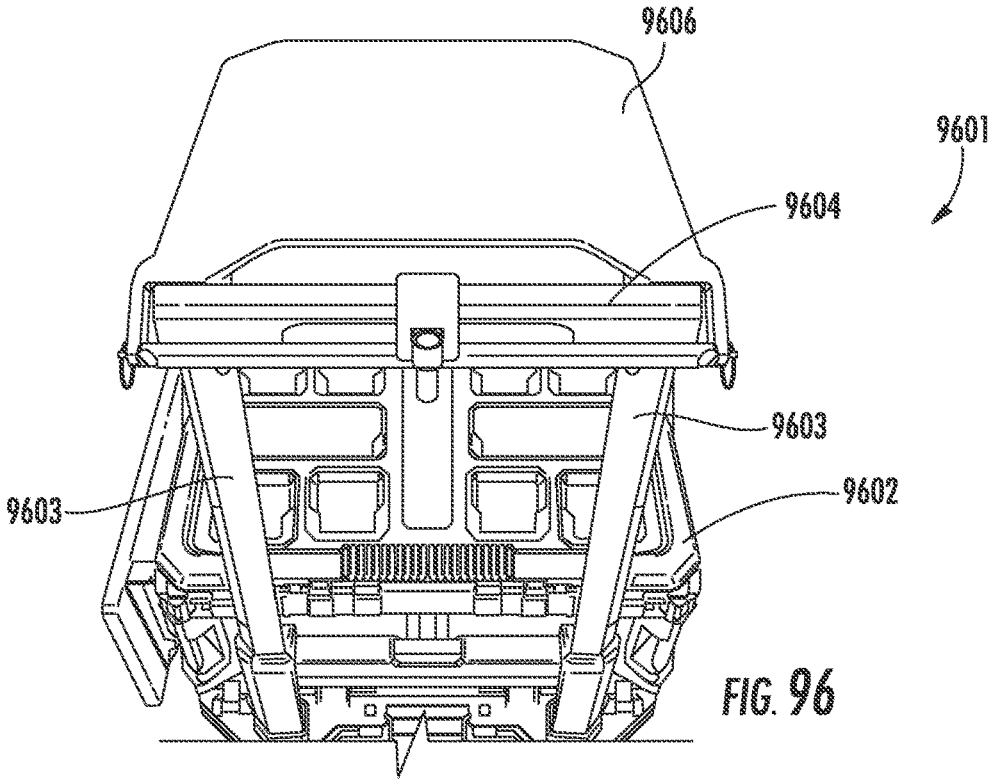
9606
9601
9604
9603
9603
9602

FIG. 96

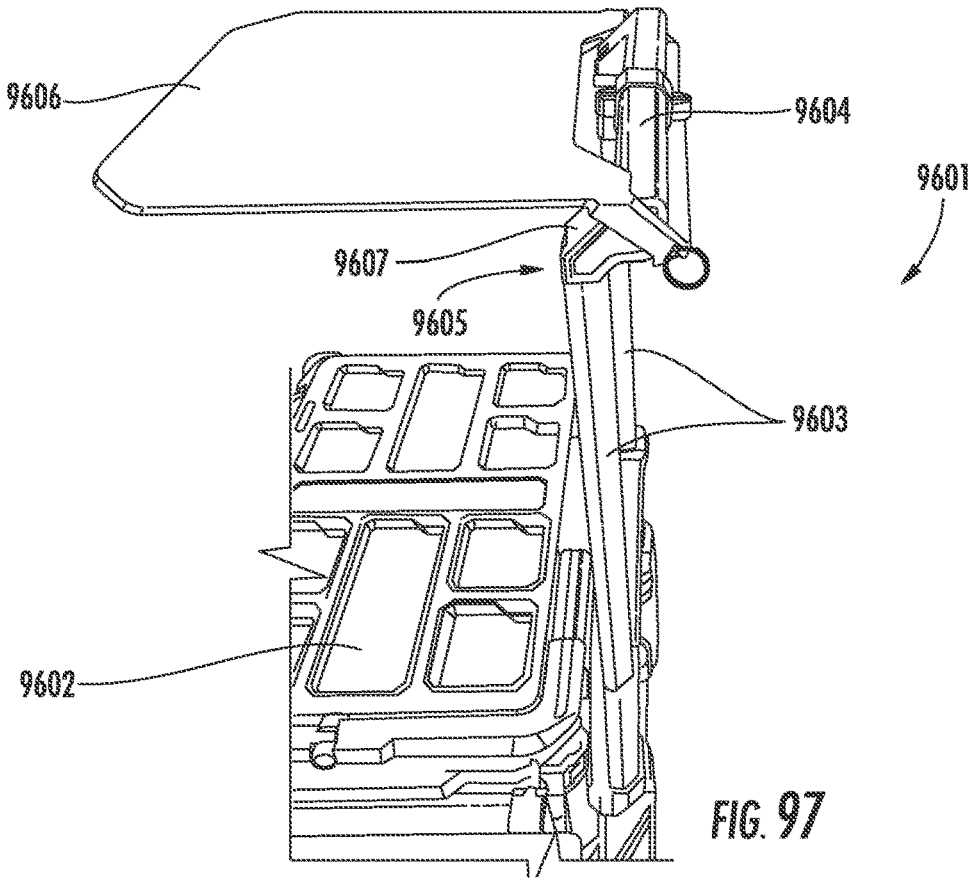
9606
9604
9601
9607
9605
9603
9602

FIG. 97

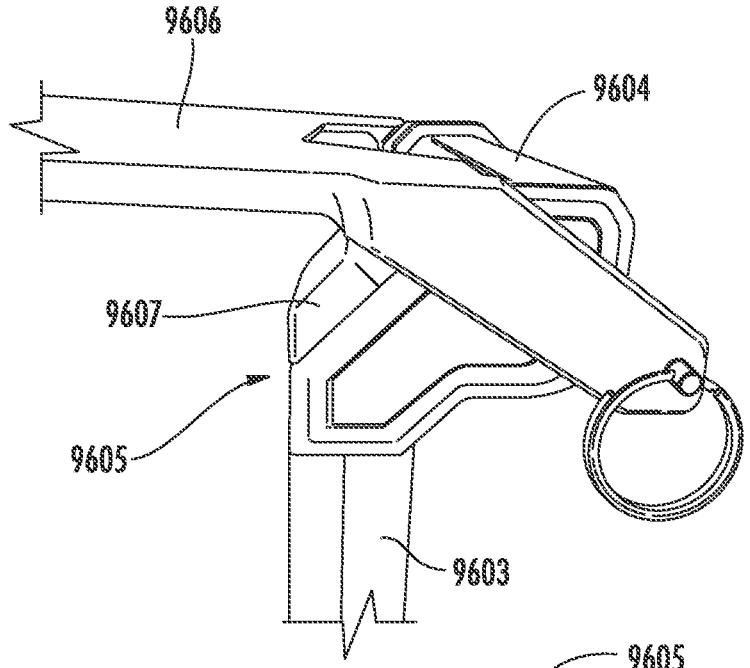
9606
9604
9607
9605
9603

FIG. 98

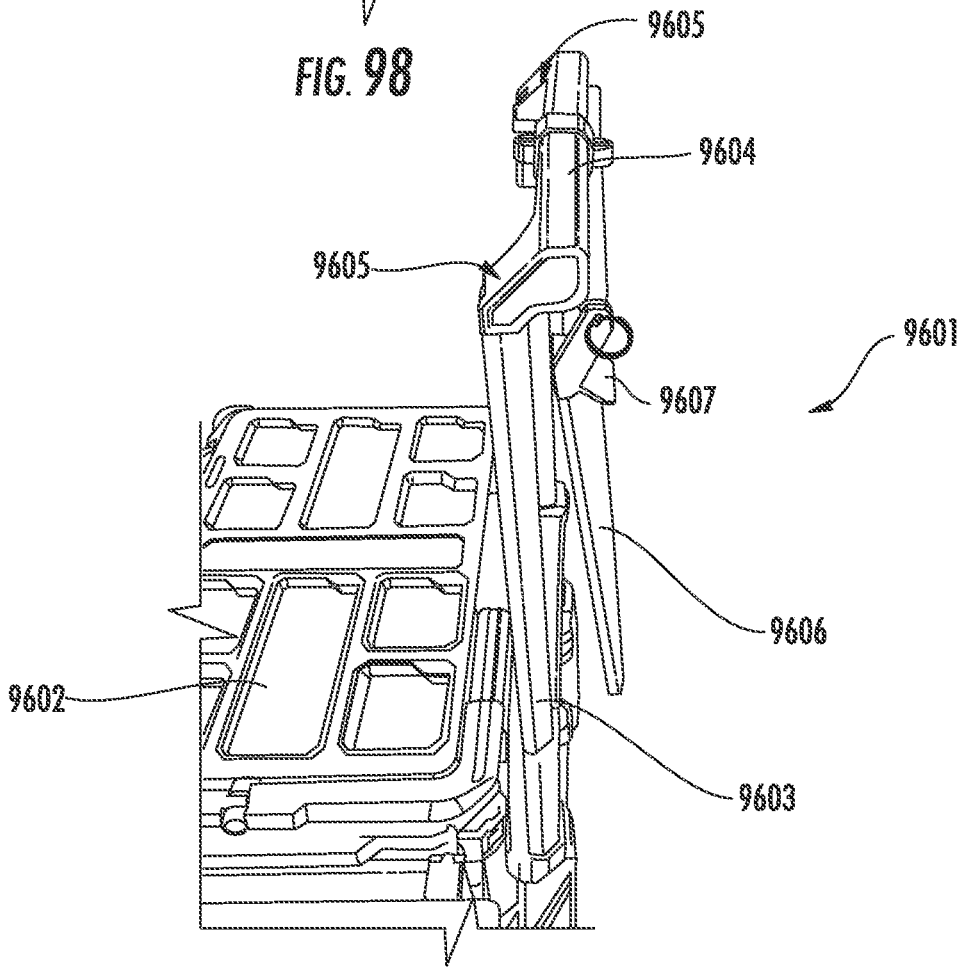
9605
9604
9605
9601
9607
9606
9602
9603

FIG. 99

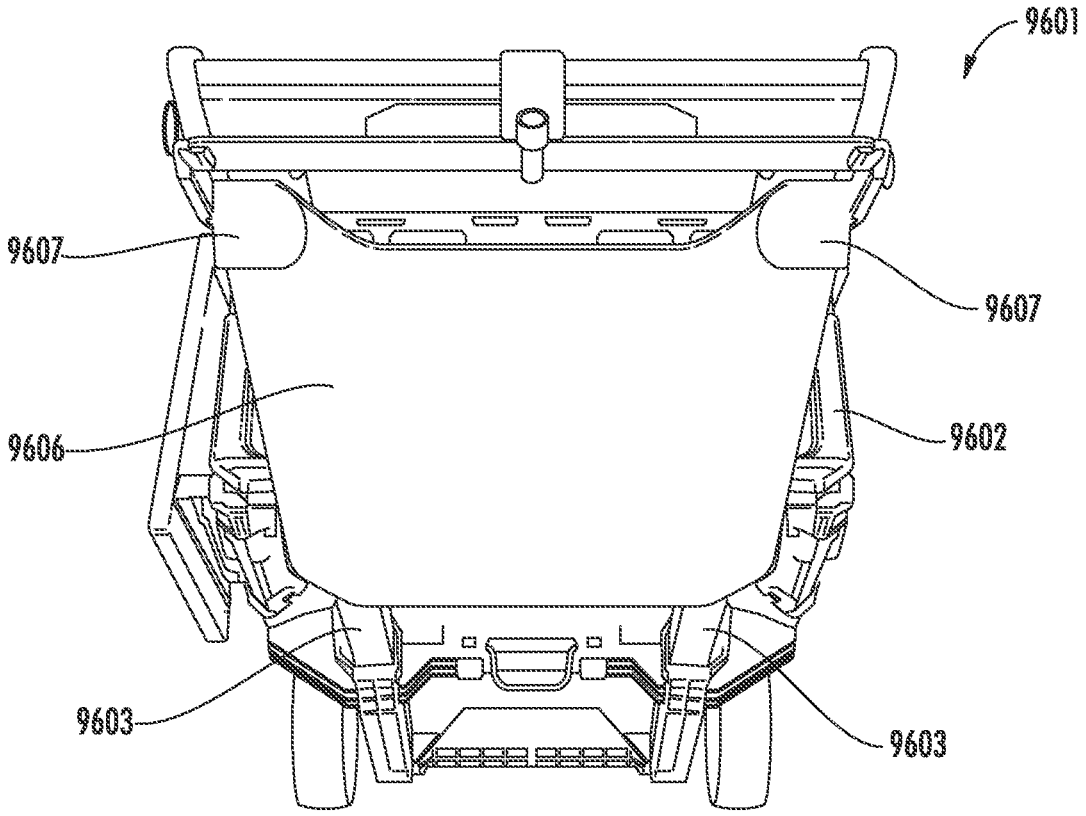

FIG. 100

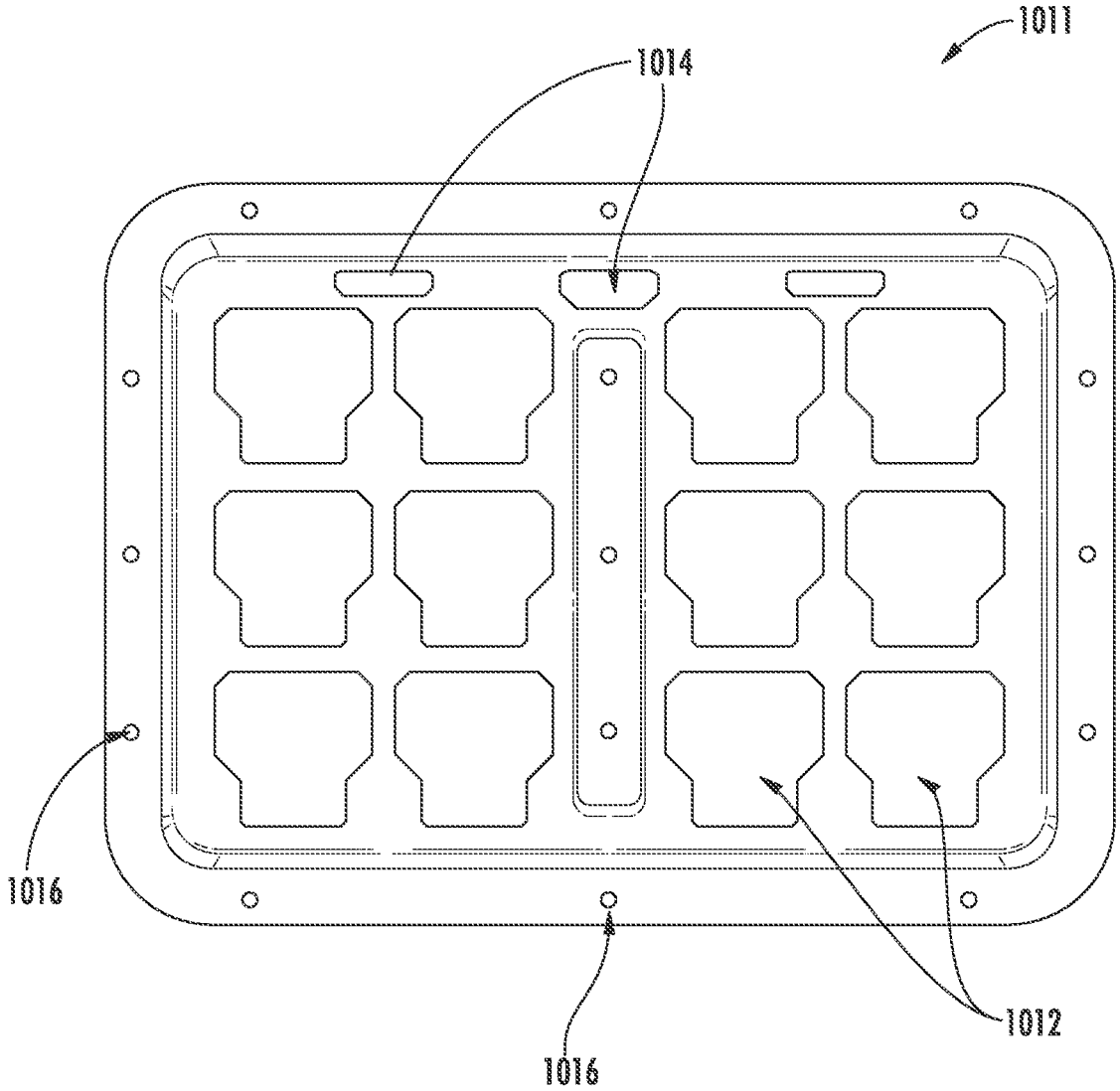

FIG. 101

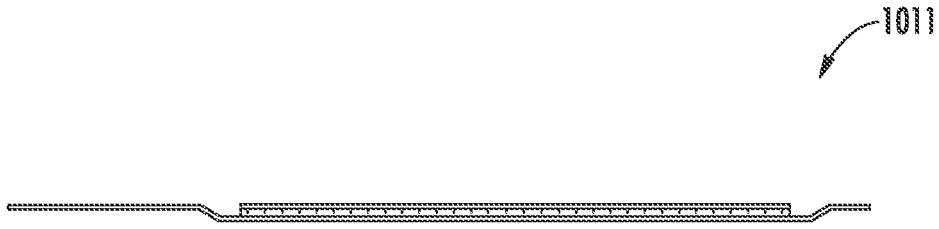

FIG. 102

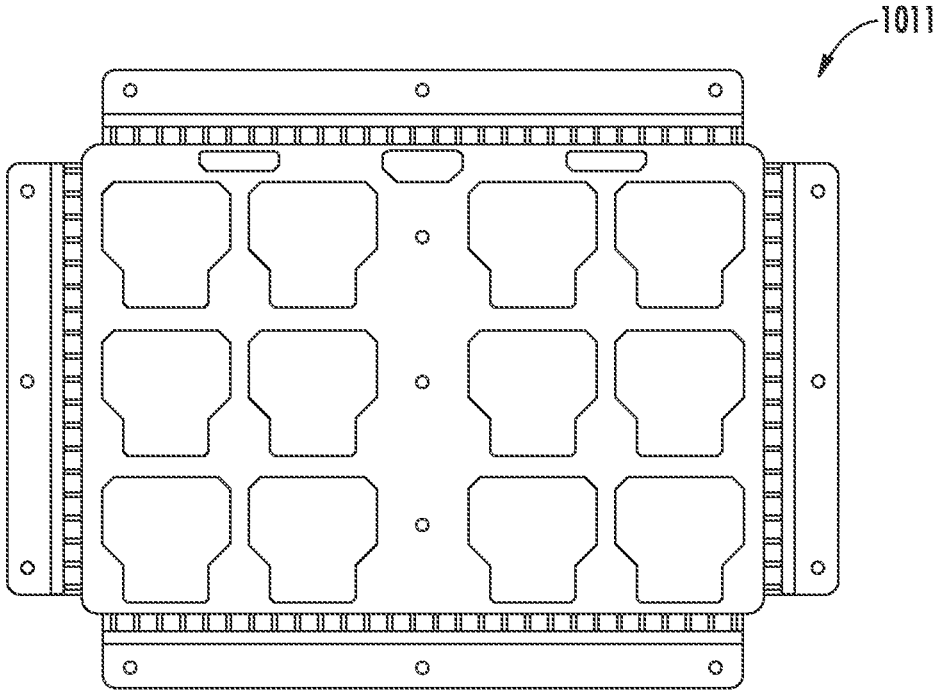

FIG. 103

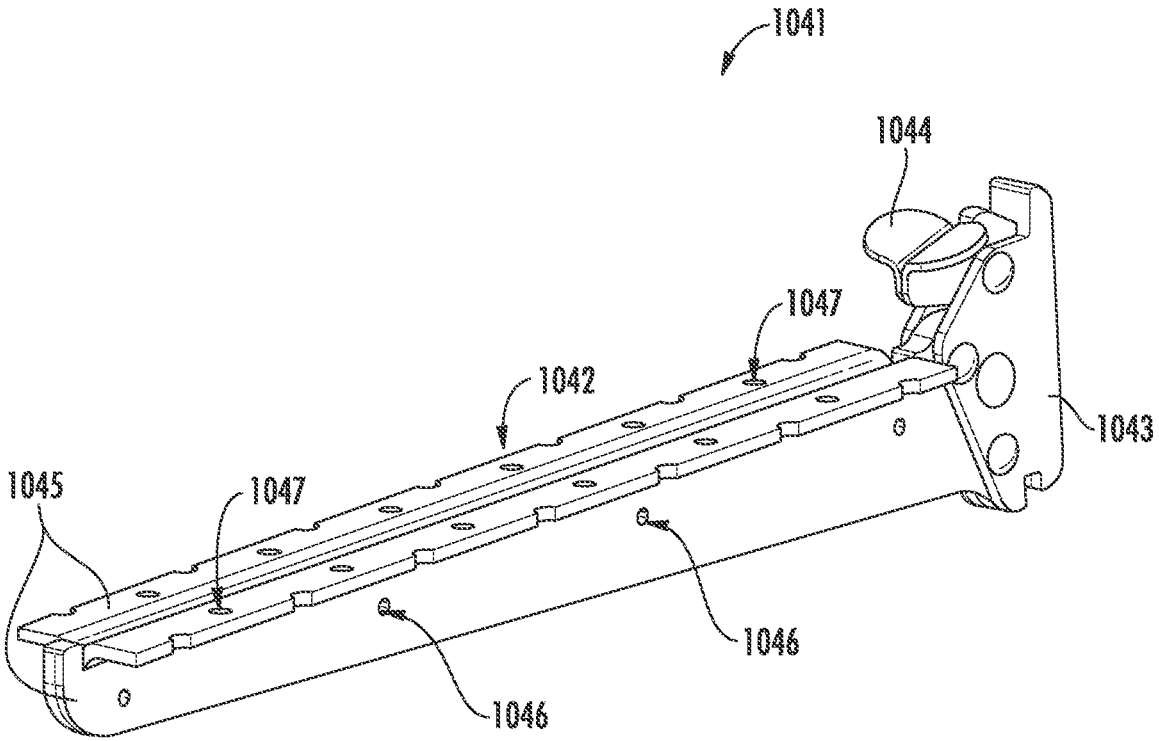

FIG. 104

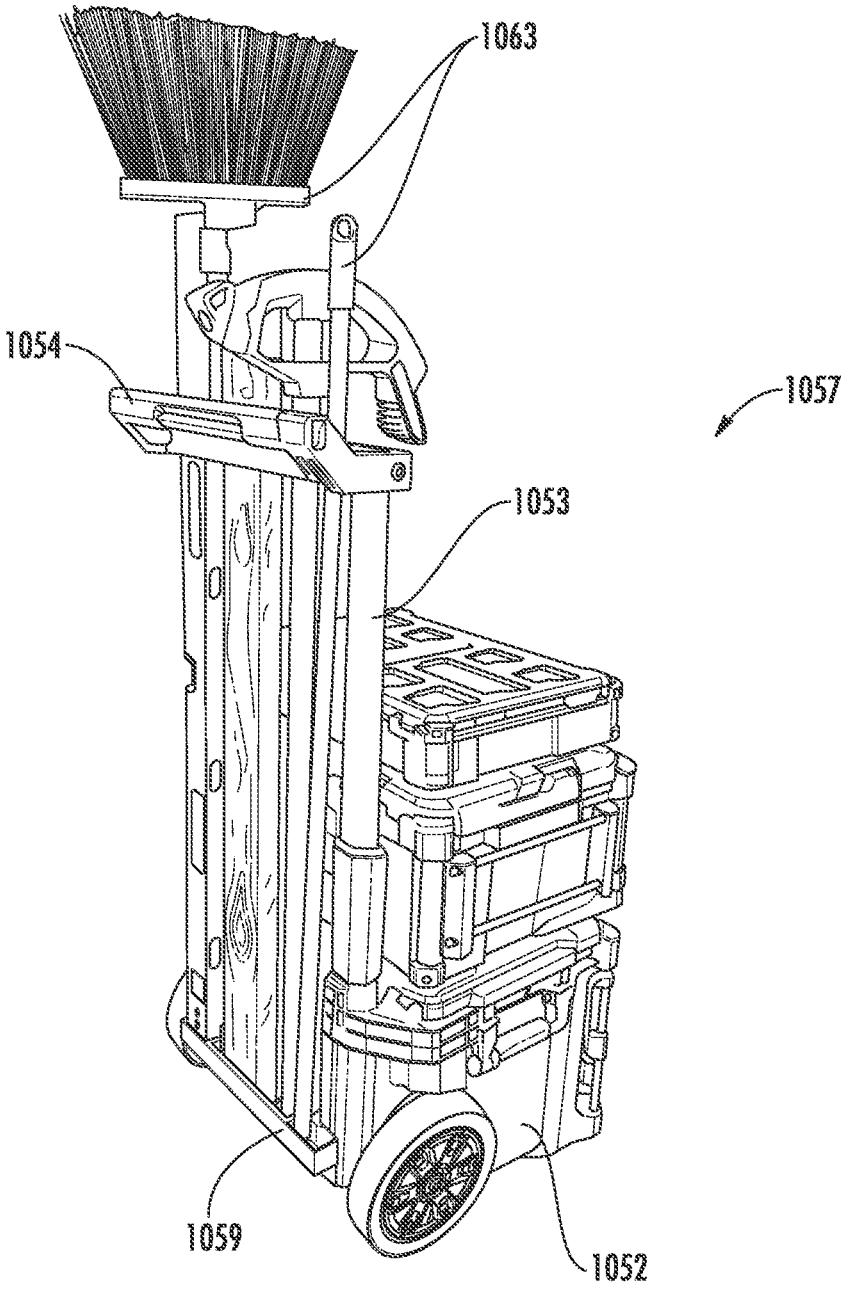

FIG. 105

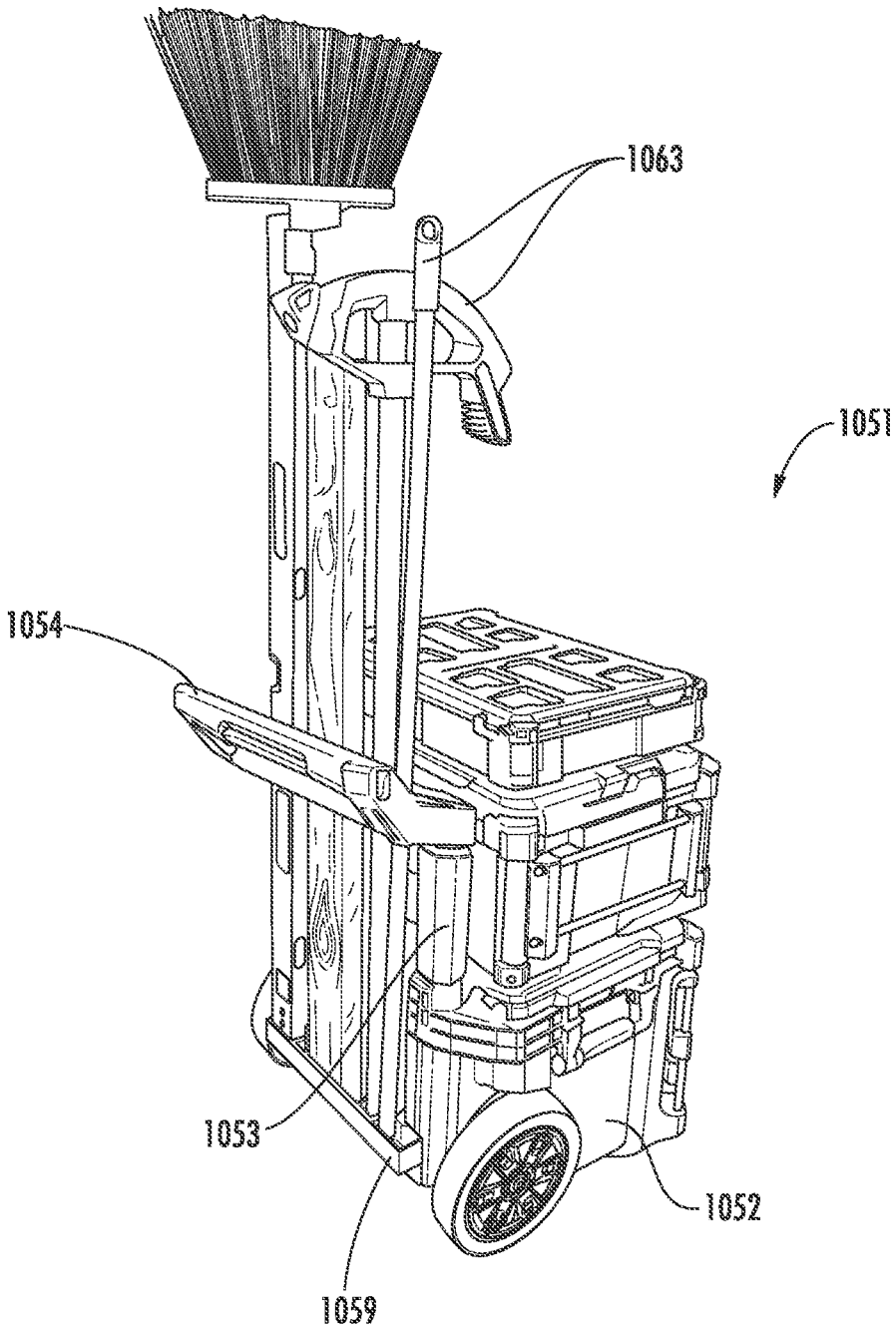

FIG. 106

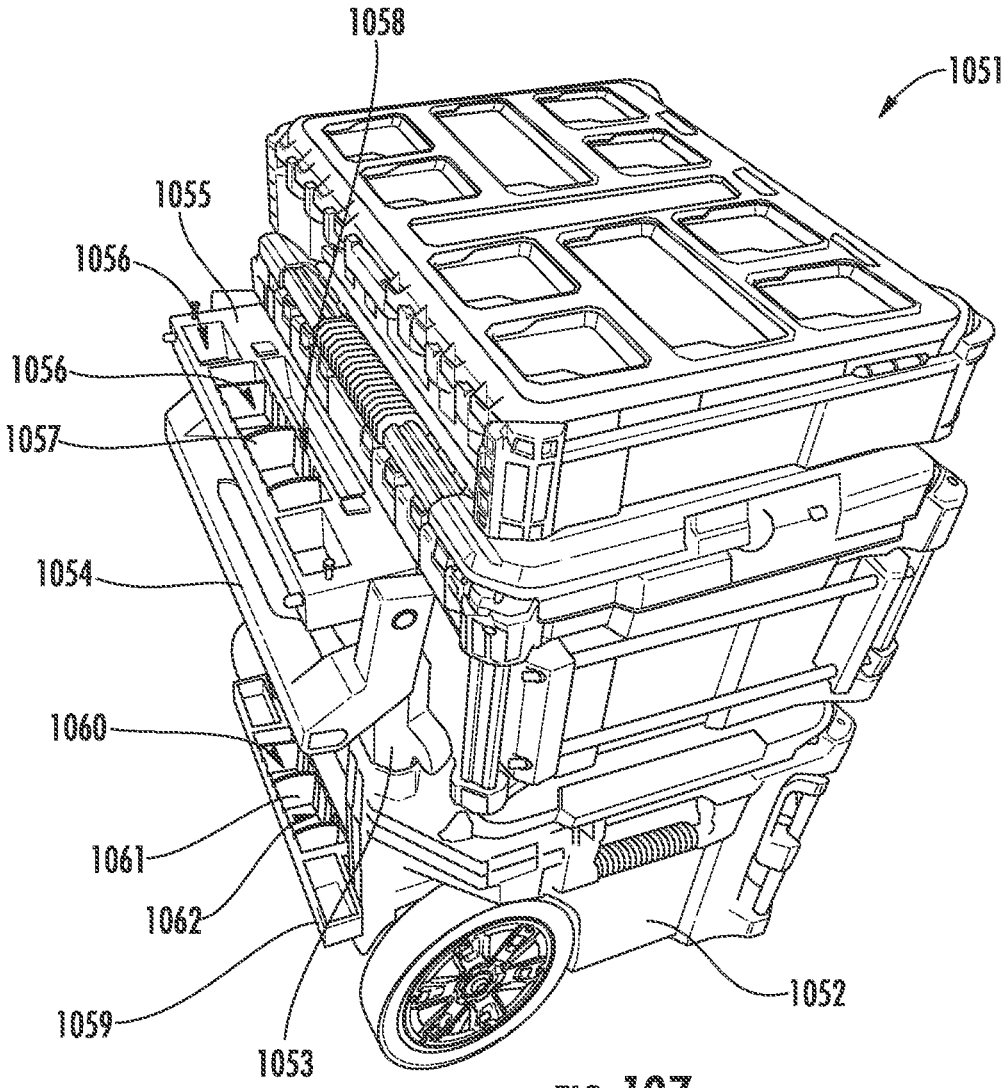
1058
1051
1055
1056
1056
1057
1054
1060
1061
1062
1059
1053
1052

FIG. 107

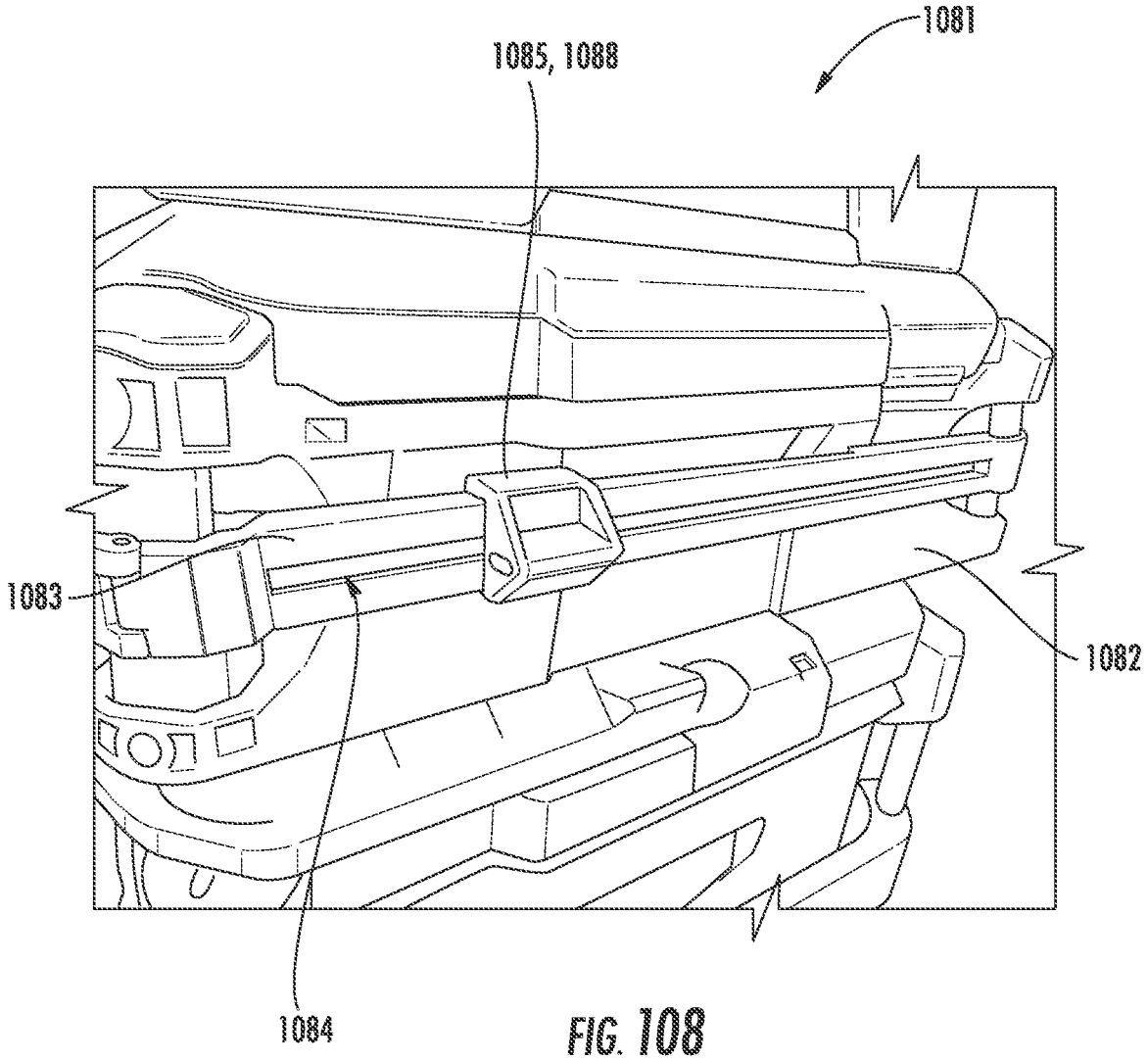

FIG. 108

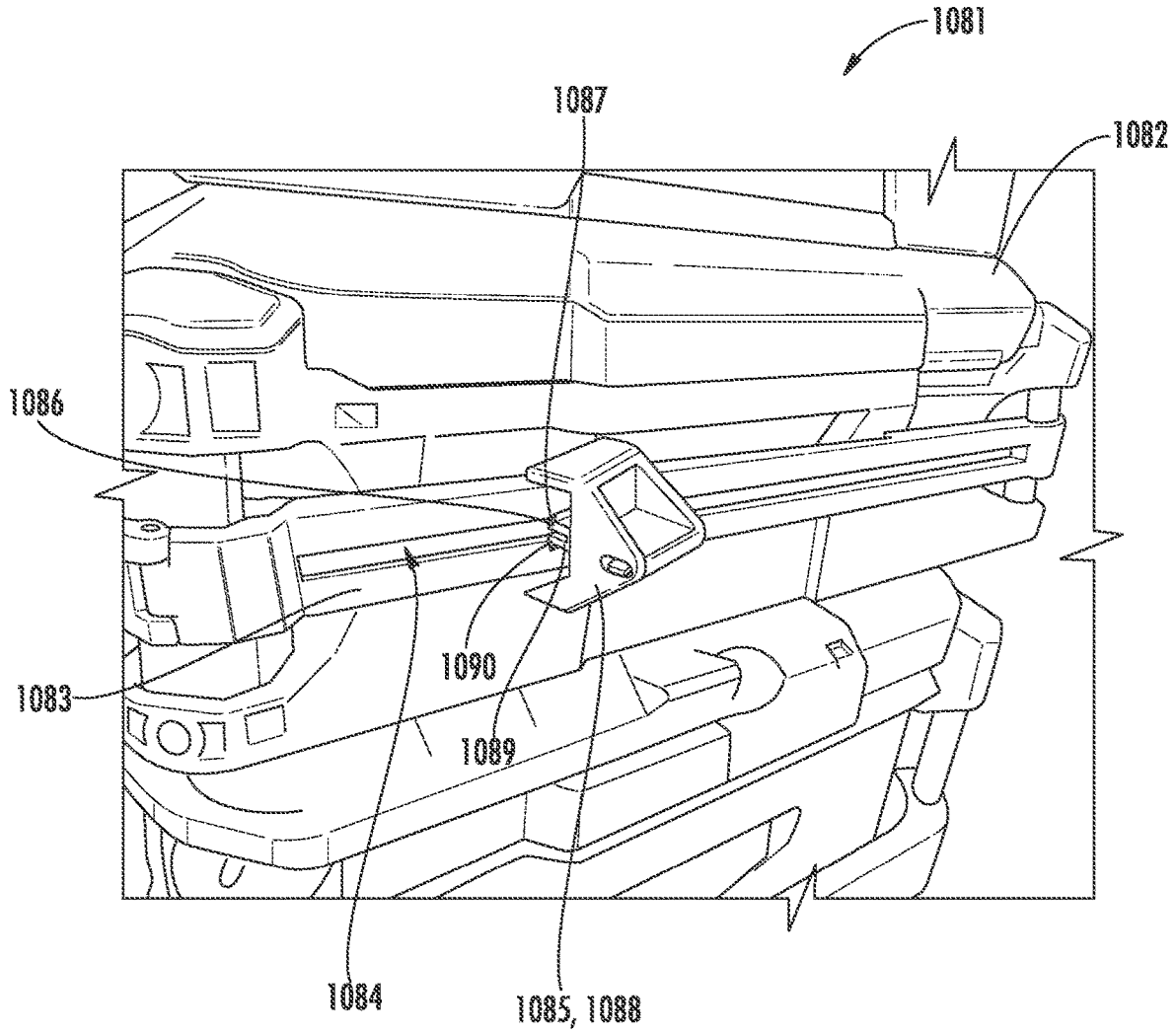

FIG. 109

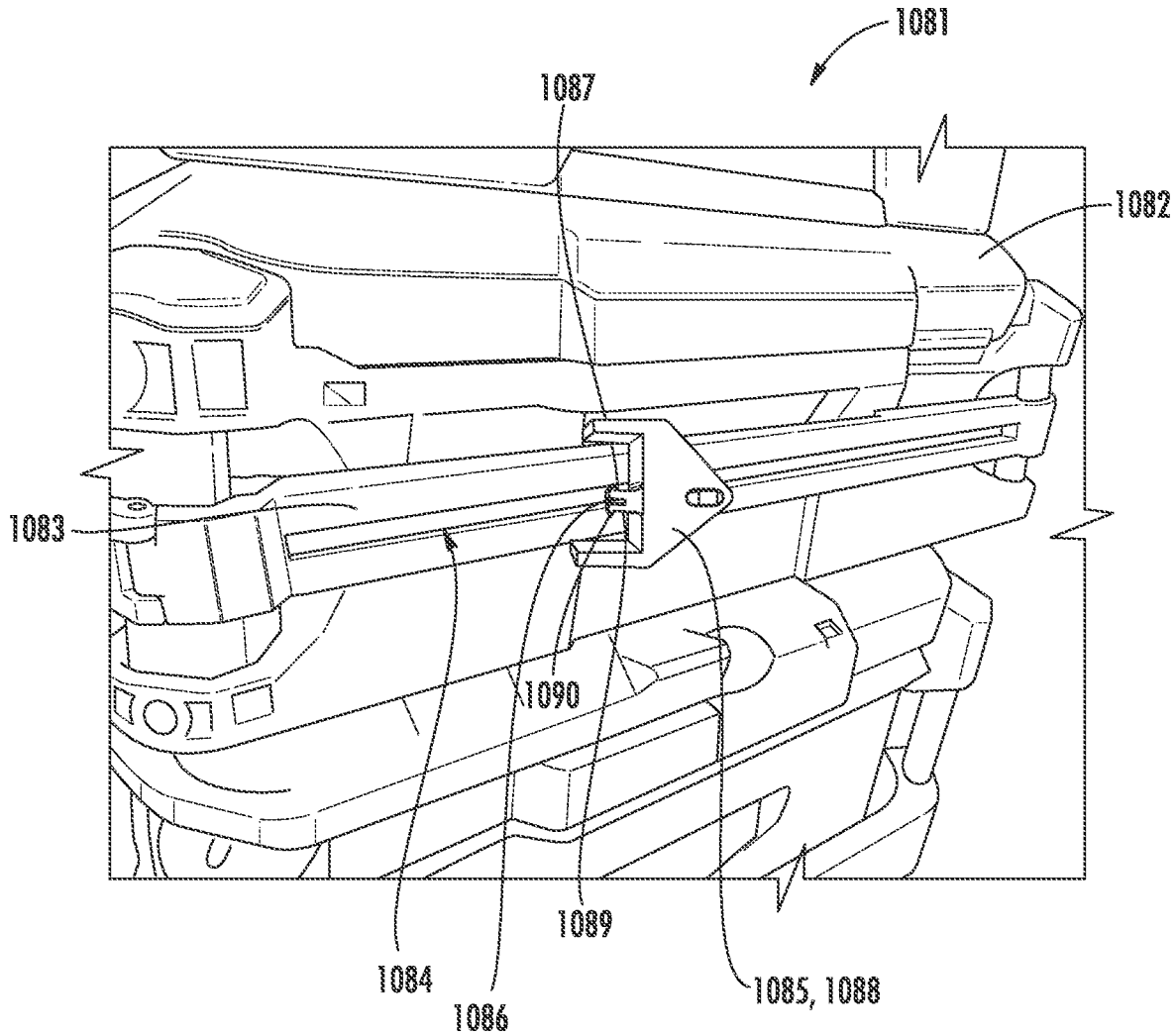

FIG. 110

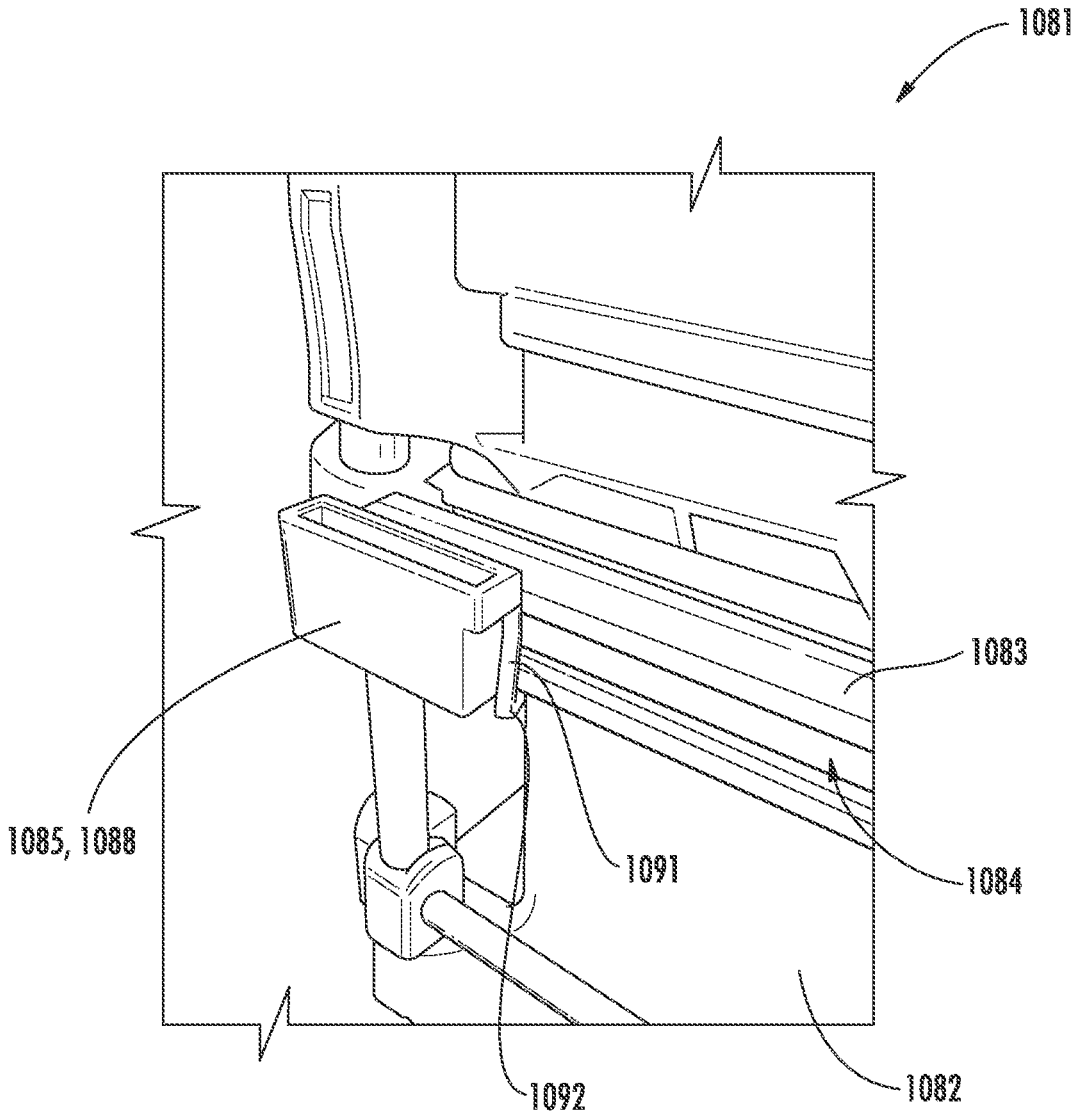

FIG. 111

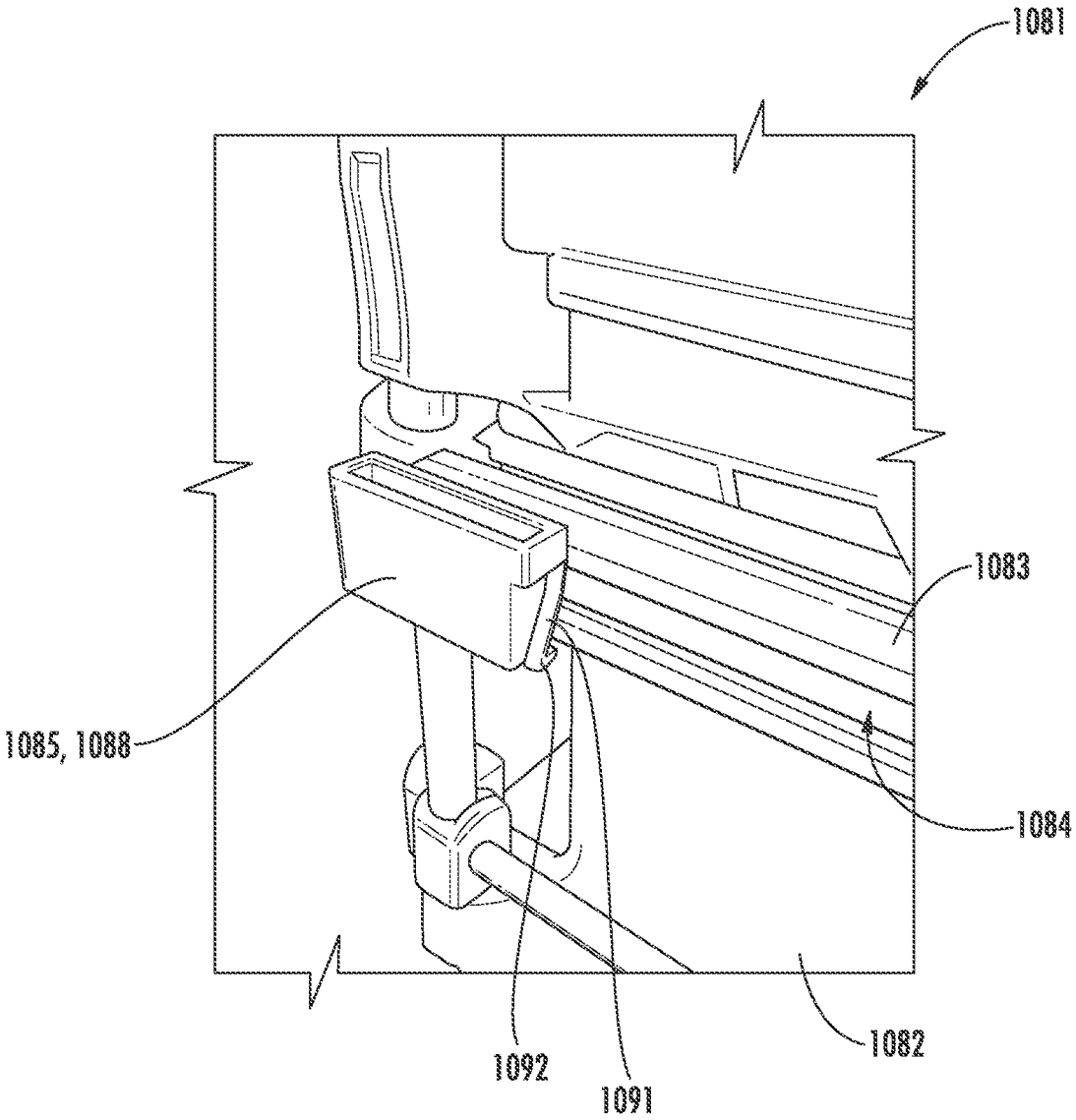

FIG. 112

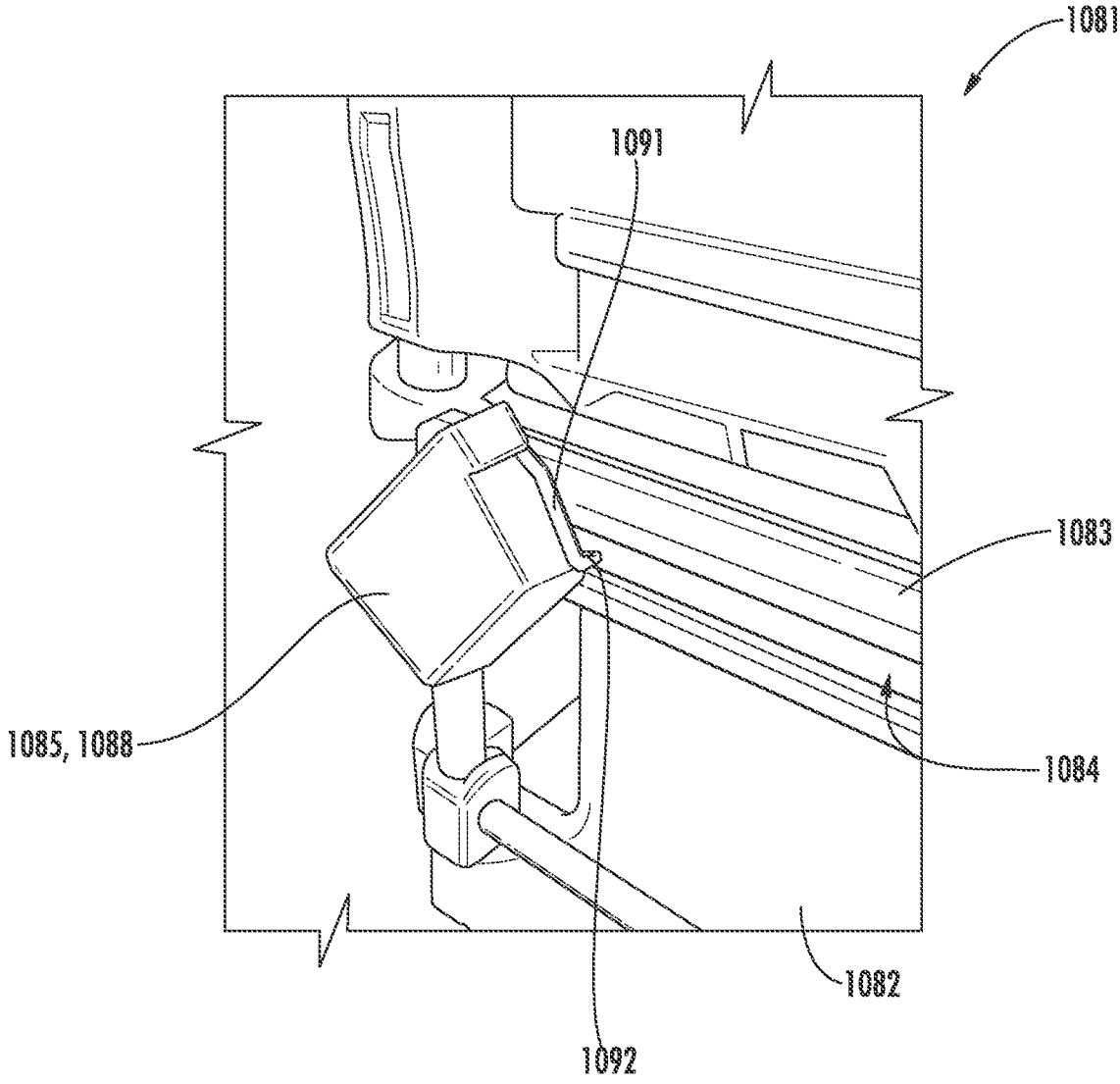

FIG. 113

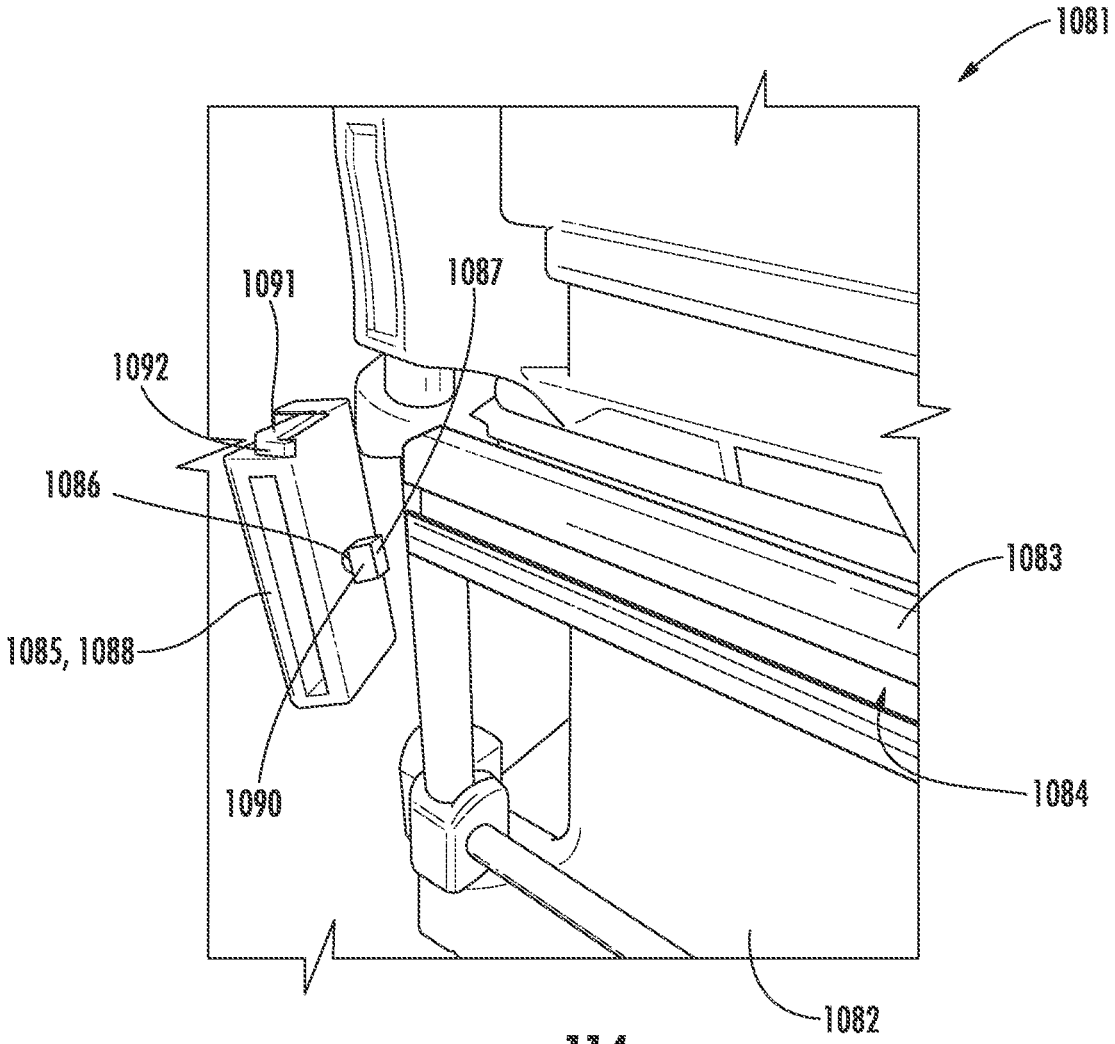

FIG. 114

STORAGE DEVICE SYSTEM

CROSS-REFERENCE TO RELATED PATENT APPLICATION

[0001] This application is a continuation of International Application No. PCT/US2018/044629, filed Jul. 31, 2018, which claims priority to U.S. Provisional Patent Application No. 62/538,860, filed Jul. 31, 2017, and to U.S. Provisional Patent Application No. 62/594,292, filed Dec. 4, 2017, and to U.S. Provisional Patent Application No. 62/608,302, filed Dec. 20, 2017, and to U.S. Provisional Patent Application No. 62/609,985, filed Dec. 22, 2017, and to U.S. Provisional Patent Application No. 62/613,263, filed Jan. 3, 2018, and to U.S. Provisional Patent Application No. 62/621,403, filed Jan. 24, 2018, and to U.S. Provisional Patent Application No. 62/634,537, filed Feb. 23, 2018, the entire contents all of which are hereby incorporated by reference in there entireties.

BACKGROUND

[0002] The present invention relates to storage devices, including bags, storage totes, tool boxes and organizers.

[0003] Tool storage devices are often used to transport tools and accessories. Tool storage devices include soft-sided storage devices such as a tool bags, and rigid storage devices such as tool boxes and organizers. Soft-sided storage devices include walls made of flexible material and typically have a bottom made of a rigid material. Rigid storage devices include a rigid base and a rigid cover coupled thereto. The rigid base may include dividers and storage compartments for storing and organizing tools and accessories.

BRIEF DESCRIPTION OF THE DRAWINGS

[0004] FIG. **1** is a perspective view of a storage device system including a soft-sided storage device coupled to a rigid storage device.

[0005] FIG. **2** is a perspective view of the soft-sided storage device of FIG. **1**.

[0006] FIG. **3** is a bottom perspective view of the soft-sided storage device of FIG. **2**.

[0007] FIG. **4** is another bottom perspective view of the soft-sided storage device of FIG. **2**.

[0008] FIG. **5** is a top perspective view of the rigid storage device of FIG. **1**.

[0009] FIG. **6** is a top view of the rigid storage device of FIG. **5**.

[0010] FIG. **7** is an enlarged cross-sectional view of a portion of the storage device system of FIG. **1**, illustrating a bottom of the soft-sided storage device disengaged from a top of the rigid storage device.

[0011] FIG. **8** is an enlarged cross-sectional view of the portion of the storage device system shown in FIG. **7**, illustrating the bottom of the soft-sided storage device engaged with the top of the rigid storage device.

[0012] FIG. **9** is an enlarged cross-sectional view of a portion of the storage device system of FIG. **1**, illustrating a latch assembly in a locking position.

[0013] FIG. **10** is an enlarged cross-sectional view of the portion of the storage device system shown in FIG. **9**, illustrating the latch assembly in an unlocking position.

[0014] FIG. **11** is a perspective view of the rigid storage device of FIG. **5**, illustrating a cover in an open position.

[0015] FIG. **12** is a top perspective view of a bin for use with the storage case.

[0016] FIG. **13** is a top view of the bin of FIG. **12**.

[0017] FIG. **14** is a side view of the bin of FIG. **12**.

[0018] FIG. **15** is a bottom view of the bin of FIG. **12**.

[0019] FIG. **16** is an exploded perspective view of the bin of FIG. **12**.

[0020] FIG. **17** illustrates two relatively short bins stacked on top of one another.

[0021] FIG. **18** illustrates a relatively tall bin.

[0022] FIG. **19** is an enlarged view of portions of the two relatively short bins of FIG. **17** stacked together.

[0023] FIG. **20** is an enlarged view of a portion of the storage case in the open position.

[0024] FIG. **21** is a perspective view of a backpack of the storage device system.

[0025] FIG. **22** illustrates an accessory rail usable with the storage device system.

[0026] FIG. **23** is a perspective view of a tool storage container according to another embodiment.

[0027] FIG. **24** is a perspective view of a tool storage container according to another embodiment.

[0028] FIG. **25** is a perspective view of a tool storage container according to another embodiment.

[0029] FIG. **26** is a perspective view of a tool storage container according to another embodiment.

[0030] FIG. **27** is a perspective view of a tool cart of the storage device system.

[0031] FIG. **28** is a perspective view of a cooler according to one embodiment.

[0032] FIG. **29** is a perspective view of a tool cart of the storage device system according to another embodiment.

[0033] FIG. **30** is a perspective view of a shelf unit of the storage device system.

[0034] FIG. **31** is an enlarged perspective view of a portion of the shelf unit of FIG. **30**.

[0035] FIG. **32** illustrates a clamping rail usable with the storage device system.

[0036] FIGS. **33**A-**33**F illustrate a tool storage container according to another embodiment.

[0037] FIG. **34** illustrates a tool storage container according to another embodiment.

[0038] FIG. **35** illustrates a tool storage container according to another embodiment.

[0039] FIG. **36** illustrates a tool storage container according to another embodiment.

[0040] FIG. **37** illustrates a cart for use with tool storage containers.

[0041] FIG. **38** is an alternative view of the cart of FIG. **37**.

[0042] FIG. **39** illustrates an embodiment of a tool storage container having a wheel lock.

[0043] FIG. **40** illustrates an alternative embodiment of a tool storage container having a wheel lock.

[0044] FIG. **41** illustrates a side mounted cleat for a modular storage box.

[0045] FIG. **42** illustrates toolbox or tool storage container that can be converted to a cooler.

[0046] FIG. **43** illustrates a soft sided back that can be mounted to a side (e.g., front side) of a storage box or tool storage container.

[0047] FIG. **44** illustrates a workstation for use with tool storage devices.

[0048] FIG. **45** illustrates a plate that includes cleat receptacles and a latch receptacle.

[0049] FIG. **46** illustrates the plate of FIG. **45** attached to a backpack.

[0050] FIG. **47** illustrates a storage cart/work space that includes plates having cleat receptacles, similar to the cleat receptacles of the plate in FIG. **45**.

[0051] FIG. **48** illustrates the cleat receptacles of FIG. **45** integrated with a truck tool box.

[0052] FIG. **49** illustrates the cleat receptacles of FIG. **45** mounted on a wall of the truck bed.

[0053] FIG. **50** illustrates the cleat receptacles of the cleat plate of FIG. **45** mounted to a floor or wall.

[0054] FIG. **51** illustrates a hook having a cleat.

[0055] FIG. **52** illustrates an organizing tray attached to a modular storage box.

[0056] FIG. **53** illustrates soft storage bags (e.g., totes or tool bags) having a hard (plastic) plate on the bottom that allows the soft bag to be secured to the systems described above.

[0057] FIG. **54** illustrates a belt with a cleat receptacle that can receive any tool or bag that has a cleat, such as the cleats discussed above.

[0058] FIG. **55** illustrates that in another embodiment, a surface with retractable/foldable legs has cleat receptacles that can be used to snap a tool box having a cleat to.

[0059] FIG. **56** illustrates the surface of FIG. **55** in a side elevation view.

[0060] FIG. **57** illustrates a modular storage box having a light (e.g., LED) that is mounted to a boss in the lid of the modular storage box.

[0061] FIG. **58** illustrates an adaptor shelf having cleats and cleat receptacles that can be used with storages boxes that do not have cleats and/or cleat receptacles compatible with those discussed above.

[0062] FIG. **59** illustrates the adaptor shelf of FIG. **58** with various items other than storage boxes.

[0063] FIG. **60** illustrates a battery clamp can be used and can compress along the sides of a battery.

[0064] FIG. **61** illustrates a stack lock.

[0065] FIG. **62** illustrates an upper connection portion of the stack lock of FIG. **61**.

[0066] FIG. **63** illustrates the stack lock of FIG. **61** with storage boxes disposed thereon.

[0067] FIG. **64** illustrates a lower joint of the stack lock of FIG. **61**.

[0068] FIG. **65** illustrates an upper joint of the stack lock of FIG. **61**.

[0069] FIG. **66** illustrates a fold-out or slide out work surface has cleats that can be secured to the top of a box having cleat receptacles (e.g., box of FIG. **41**) to create a mobile work station.

[0070] FIG. **67** illustrates a device that is used to lock devices with a cleat received in a cleat receptacle in place.

[0071] FIG. **68** illustrates a single cleat that can be used similar to the embodiment of FIG. **67**.

[0072] FIG. **69** illustrates an accessory holder that can be mounted to a box, such as the box of FIG. **41**.

[0073] FIG. **70** illustrates a plate that includes cleats on the bottom surface (not shown) that mount to the top surface of a box having cleat receptacles (e.g., box of FIG. **41**).

[0074] FIG. **71** illustrates a 5-piece crate that can be assembled by the user.

[0075] FIG. **72** illustrates trays including cleats on the bottom of the trays that interact with cleat receptacles on a top or lid of a tool box.

[0076] FIG. **73** illustrates an example tray of FIG. **72**.

[0077] FIG. **74** illustrates another example tray of FIG. **72**.

[0078] FIG. **75** illustrates the foldable table in the open position.

[0079] FIG. **76** illustrates the foldable table in the closed position.

[0080] FIG. **77** illustrates an accessory case that secures to the system via a single cleat.

[0081] FIG. **78** illustrates a piece that can covert the top of a tool box to be a seat.

[0082] FIG. **79** illustrates a bin that mounts to the side of a tool box and may attach to the extruded metal supports located at the corners of the box.

[0083] FIG. **80** illustrates a folding crate in the assembled position.

[0084] FIG. **81** illustrates the folding crate of FIG. **80** in the folded position.

[0085] FIG. **82** illustrates a clamp that includes a cleat.

[0086] FIG. **83** illustrates a bag/box/item having a cleat that may be hinged or swiveled to a cleat receptacle on a user's belt such that the item remains upright even when the user bends over.

[0087] FIG. **84** is a side view of a shelving unit.

[0088] FIG. **85** illustrates a separator with pockets that may be used to separate the inside contents of a box.

[0089] FIG. **86** illustrates a table that may be mounted to the side of a modular box and be hinged so that the table may flip up for use or down for storage.

[0090] FIG. **87** illustrates a garbage bag holder that may be mounted to the side of a box and swung down when not in use.

[0091] FIG. **88** illustrates a modular receptacle plate that includes hangers that allow the plate to be hung from the side of a truck, the side of a bucket (e.g., on a bucket lift truck), on a horizontal rail or 2×4, etc.

[0092] FIG. **89** illustrates one or more modular receptacle plates having cleats that may be mounted to a frame that includes a hitch for securing to a hitch receptacle of a truck.

[0093] FIG. **90** illustrates a water cooler (or water bottle) having cleats on the bottom to be secured to a mobile tool box.

[0094] FIG. **91** illustrates a partial bottom perspective view of the water cooler of FIG. **90**.

[0095] FIG. **92** illustrates two strap mounting portions (e.g., one with a fixed end, one with a lockable end; two lockable ends) may have cleats that slide into the cleat receptacles.

[0096] FIG. **93** shows a tray closed.

[0097] FIG. **94** shows the tray of FIG. **93** open.

[0098] FIG. **95** illustrates an insert for a box that is configured to hold a combination wrench set (e.g., either fixed or ratcheting).

[0099] FIG. **96** illustrates a top perspective view of a working platform that is attached to the handle of the rolling toolbox (e.g., tool box of FIG. **39**).

[0100] FIG. **97** illustrates a side perspective view of the working platform of FIG. **96**.

[0101] FIG. **98** illustrates a detailed side perspective view of the working platform of FIG. **96**.

[0102] FIG. **99** illustrates a side perspective view of the working platform of FIG. **96** in the storage position.

[0103] FIG. **100** illustrates a top perspective view of the working platform of FIG. **96** in the storage position.

[0104] FIG. **101** illustrates a plate that can be secured in place.

[0105] FIG. **102** illustrates a side elevation view of an alternative embodiment of the plate of FIG. **101**.

[0106] FIG. **103** illustrates a top plan view of the plate of FIG. **102**.

[0107] FIG. **104** illustrates a modular connection system for a tool storage container to a shelving use.

[0108] FIG. **105** illustrates a top perspective view of a storage container with the telescopic member extended.

[0109] FIG. **106** illustrates a top perspective view of the storage container of FIG. **105** with the telescopic member retracted.

[0110] FIG. **107** illustrates a top perspective view of the storage container of FIG. **105** with the telescopic member retracted and the handle pivoted to the storage position.

[0111] FIG. **108** illustrates a storage container with the accessory attachment insert connected thereto.

[0112] FIG. **109** illustrates the storage container of FIG. **108** with the accessory attachment insert partially removed.

[0113] FIG. **110** illustrates the storage container of FIG. **108** with the accessory attachment insert fully removed.

[0114] FIG. **111** illustrates a storage container with another embodiment of an accessory attachment insert connected thereto.

[0115] FIG. **112** illustrates the storage container of FIG. **111** with a lock lever bent partially away from the storage container.

[0116] FIG. **113** illustrates the storage container of FIG. **111** with the accessory attachment insert twisted in a removal process.

[0117] FIG. **114** illustrates the storage container of FIG. **111** with the accessory attachment insert fully removed.

[0118] Before any embodiments of the invention are explained in detail, it is to be understood that the invention is not limited in its application to the details of construction and the arrangement of components set forth in the following description or illustrated in the following drawings. The invention is capable of other embodiments and of being practiced or of being carried out in various ways. Also, it is to be understood that the phraseology and terminology used herein is for the purpose of description and should not be regarded as limiting.

DETAILED DESCRIPTION OF EMBODIMENTS

[0119] FIG. **1** illustrates a storage device system **10** including a soft-sided storage device **14**, such as soft-sided bag, removably coupled to a hard-sided or rigid storage device **18**, such as a rigid storage case (e.g., a rigid tool box or organizer).

[0120] With reference to FIGS. **2-4**, the bag **14** includes a rigid or hard bottom member **22** (e.g., thermoform plastic, injection molded, etc.) and flexible sidewalls **26** cooperating to define a storage compartment **30**. The sidewalls **26** define an open top **34** for access to the storage compartment **30**. A handle **38** is connected between opposite sidewalls **26** and is engageable by a user to carry the bag **14**.

[0121] One or more interface or connection projections **46** are provided on the bottom member **22**. In the illustrated embodiment, each projection **46** extends from a bottom surface **50** of the bottom member **22** and is configured to cooperate with a connection recess **54** (FIGS. **5-6**) on the storage case **18** to interface and connect the bag **14** to the storage case **18**. In the illustrated embodiment, each projection **46** is formed integrally with the bottom member **22**, for example, in a thermoforming process. Each projection **46** has a channel **58** on each side of the projection **46** extending parallel to a longitudinal axis A of the bottom member **22**, as best shown in FIG. **4**. Each channel **58** has a front, open end **62** and a back, closed end **66** along the axis A. Each projection **46** has a planar surface **70** with a generally rectangular shape. In other embodiments, the planar surface **70** may be another shape, e.g., circular, triangular, etc. In the illustrated embodiment, there are six projections **46** arranged in three rows of two along the axis A. In other embodiments, the bag **14** may include fewer or more projections **46**, and/or the projections **46** may be arranged in different patterns. The projections **46** are arranged such that the bag **14** can be supported on a surface by the projections **46** through contact with the planar surfaces **70**.

[0122] The bag **14** further includes a latch assembly **78** including a latch member **82**, as shown in FIG. **3**. The latch assembly **78** is supported by the bottom member **22** within a latch passage **86** defined in the bottom member **22**. The latch member **82** includes a grip portion **90** and an interference portion **94**. The latch member **82** is slidingly movable along an axis perpendicular to the longitudinal axis A of the bottom member **22** within the latch passage **86**. The interference portion **94** selectively protrudes from the latch passage **86** through a slot **98** defined in the bottom surface **50** of the bottom member **22**. The interference portion **94** has a tapered surface **102** (FIG. **7**) at a distal end thereof. The latch member **82** is movable between a first or locking position (FIG. **9**) in which the interference portion **94** extends through the slot **98**, and a second or unlocking position (FIG. **10**) in which the interference portion **94** is retracted into the latch passage **86** and does not extend through the slot **98**. The latch assembly **78** further includes a biasing member **106** (e.g., a compression spring) arranged to bias the latch member **82** into the locking position (FIG. **9**). The latch member **82** may be urged against the biasing member **106** to the unlocking position (FIG. **10**) by pushing on the grip portion **90**. In the locking position, the interference portion **94** does not extend beyond the planar surfaces **70** of the projections **46**.

[0123] With reference to FIGS. **5** and **6**, the storage case **18** includes a base **114** and a top or cover **118**. The cover **118** is movably coupled to the base **114** between a closed position (FIG. **5**) and an open position (FIG. **11**). In the illustrated embodiment, the cover **118** is pivotally coupled to the base **114** by a hinge **122**. The cover **118** includes cover latches **126** to releasably secure the cover **118** in the closed position. The storage case **18** also includes a side handle **130** to facilitate independently carrying the storage case **18**.

[0124] With continued reference to FIGS. **5** and **6**, a top surface **134** of the cover **118** defines the connection recesses **54** that receive and cooperate with the projections **46**. In the illustrated embodiment, the connection recesses **54** include two rows of two small recesses **54***a* corresponding to two rows of two projections **46** and one large recess **54***b* corresponding to a row of two projections **46**. In other embodiments, the cover **118** may include different numbers of patterns of recesses **54**, depending on the arrangement of the projections **46** on the bag **14**. When the projections **46** are received in the connection recesses **54**, the bottom surface **50** of the bottom member **22** is arranged to contact and be supported by the top surface **134** of the cover **118**.

[0125] An interference projection or wing **142** extends into each connection recess **54** parallel to a longitudinal axis B of the cover **118** on opposite sides of the connection recess **54** from one end of the connection recess **54**. Each of the wings **142** corresponds to and is configured to cooperate with a corresponding one of the channels **58** of the projection **46** received by the respective connection recess **54**. Each of the wings **142** has a length that extends approximately half the connection recess **54** to define a first portion **146** of the connection recess **54** and a second portion **150** opposite the wings **142**, which remains open. In some embodiments, each of the wings **142** has a length that extends less than half the connection recess **54**. The second portion **150** of each connection recess **54** is sized to receive one of the projections **46** generally perpendicular to the longitudinal axis B into a first, disconnected position (FIG. **7**). In the disconnected position, the projections **46** are oriented within the connection recesses **54** such that the open ends **62** of the channels **58** are nearer to the wings **142** than the closed ends **66**. Once in the disconnected position, the bottom member **22** may be slid relative to the cover **118** parallel the longitudinal axes A, B in a first direction **152** toward the wings **142** such that the wings **142** are received within the channels **58** in a second, interfaced or connected position (FIG. **8**). The wings **142** and the projections **46** engage within the connection recesses **54** to interface and connect the bottom member **22** with the cover **118** and prevent disconnection of the bottom member **22** from the cover **118**, except in a second direction **154** opposite the first direction **152** and generally parallel to the longitudinal axes A, B. The wings **142** and the channels **58** engage one another perpendicular to the longitudinal axes A, B (i.e., perpendicular to the top surface **134** of the cover **118** and the bottom surface **50** of the bottom member **22**) when carrying the bag **14** and the storage case **18** as a single unit via the handle **38** of the bag **14** (see FIG. **1**).

[0126] With continued reference to FIGS. **5** and **6**, the top surface **134** of the cover **118** further defines an interference or locking aperture **158**. In the illustrated embodiment, the locking aperture **158** is located at one end of the cover **118**. The end of the cover **118** has a sloped surface **162** adjacent the locking aperture **158**. The locking aperture **158** is elongate and extends transverse to the longitudinal axis B of the cover **118** parallel to a short side of the cover **118**. The locking aperture **158** is located such that when the bottom member **22** and the cover **118** are in the connected position, the locking aperture **158** is aligned with the interference portion **94** of the latch member **82**. The locking aperture **158** is sized to receive and engage the interference portion **94** when the latch member **82** is in the locking position (FIG. **9**). When the interference portion **94** is engaged with the locking aperture **158** in the locking position, the latch member **82** obstructs movement of the bottom member **22** relative to the cover **118** from the connected position to the disconnected position in the second direction **154**, thereby inhibiting disconnection of the bag **14** from the storage case **18**. In particular, the interference portion **94** interferes with the cover **118** within the locking aperture **158** such that the wings **142** cannot be removed from the channels **58** of the projections **46** in the second direction **154**.

[0127] A user may couple the soft-sided bag **14** to the rigid storage case **18** to carry as a coupled unit by first, inserting the connection projections **46** of the bottom member **22** in a direction perpendicular to the cover **118** and into the second portion **150** of the connection recesses **54** of the cover **118** such that the cover **118** supports the bag **14** in the disconnected position (FIG. **7**). The bottom member **22** and the cover **118** are oriented such their longitudinal axes A, B are parallel, and the latch assembly **78** is nearest the end of the cover **118** defining the locking aperture **158**. The bag **14** (i.e., the bottom member **22**) is then manually slid in the first direction **152** such that the wings **142** are received in the channels **58** through the open end **62** of the channels **58** until the wings **142** abut the closed end **66** of the channels **58** in the connected position (FIG. **8**). As the bottom member **22** slides relative to the cover **118** from the disconnected position to the connected position, the latch member **82**, which is biased into the locking position (FIGS. **7** and **9**) by the biasing member **106**, is urged into the unlocking position (FIG. **8**) by the sloped surface **162** of the cover **118** until aligned with the locking aperture **158** when in the connected position. The biasing member **106** then automatically biases the latch member **82** back into the locking position (FIG. **9**) in which the interference portion **94** is received in and engages the locking aperture **158**. Alternatively, a user may urge the latch member **82** into the unlocking position (FIG. **10**) by pushing on the grip portion **90** upwardly against the biasing force of the biasing member **106**. The user holds the latch member **82** in the unlocking position while sliding the bag **14** in the first direction **152** from the disconnected position to the connected position. Once in the connected position (FIG. **10**), the user may release the latch member **82**, thereby allowing the latch member **82** to be biased into the locking position where the interference portion **94** is received in and engages the locking aperture **158**. The interference portion **94** of the latch member **82** extends into the locking aperture, thereby inhibiting relative movement of the bag **14** and the storage case **18** in the second direction **154** parallel to the longitudinal axes A, B. Accordingly, the latch assembly **78** and the locking aperture **158** cooperate to secure the softsided bag **14** and the rigid storage case **18** in the connected position as a unit to be carried by the handle **38** of the bag **14**. The handle **38** is positioned such that when the bag **14** and the storage case **18** are coupled as a unit, the handle **38** is above a center of gravity of the coupled unit.

[0128] When the soft-sided bag **14** and the rigid storage case **18** are coupled together, the user may quickly decouple them to carry or access each of the storage devices **14**, **18** separately. The user first urges the latch member **82** into the unlocking position (FIG. **10**) by pushing on the grip portion **90** upwardly against the biasing force of the biasing member **106**. While holding the latch member **82** in the unlocking position, the user then slides the bag **14** relative to the cover **118** in the second direction **154** along the longitudinal axes A, B from the connected position (FIG. **8**) to the disconnected position (FIG. **7**). The wings **142** disengage from the channels **58** and the projections **46** are moved into the second portion **150** of the connection recesses **54**, allowing the bag **14** to be disconnected in a direction away from and perpendicular to the top surface **134** of the cover **118**.

[0129] The latch assembly **78** is dimensioned and constructed to be movable between the locking and unlocking positions to couple the bag **14** to the cover **118**. The latch assembly **78** does not interfere with opening the storage case **18** so that the storage case **18** on the bottom will still be able to be opened with the soft-sided bag **14** attached to the cover **118**.

[0130] It should be understood that, in other constructions, multiple latch assemblies **78** and corresponding locking apertures **158** may be provided on the bag **14** and the storage case **18**. Such an arrangement may, for example, provide an increased connection between the storage devices **14**, **18**, balance or reduce the load on a given latch assembly, etc.

[0131] It should also be understood that, in other constructions, the latch assembly **78** and the locking aperture **158** may be reversed (e.g., the movable latch member **82** and the biasing member **106** may be supported on the cover **118** or the base **114** of the storage case **18**, and the locking aperture **158** may be defined by the bottom member **22** of the bag **14**). Additionally or alternatively, the relative locations of the projections **46** and the recesses **54** may be reversed (e.g., the projections **46** may extend from the cover **118** of the storage case **18**, and the recesses **54** may be formed in the bottom member **22** of the soft-sided bag **14**).

[0132] As shown in FIG. **1**, the storage devices **14**, **18** have approximately the same perimeter dimensions. There is one pair of latch assembly **78** and locking aperture **158** at one end of the storage devices **14**, **18**. However, in alternate embodiments, the storage devices **14**, **18** may have different perimeter dimensions (e.g., the bag **14** is shorter than the storage case **18**). In such embodiments, the bag **14** may have fewer projections **46** arranged such that the bag **14** may be connected to the storage case **18** in substantially the same manner as described above, except where one or more of the connection recesses **54** in the cover **118** does not receive a projection **46**. Additionally or alternatively, in some embodiments multiple soft-sided bags **14** having smaller dimensions than the storage case **18** may be simultaneously connected to the storage case **18**.

[0133] As shown in FIG. **11**, a plurality of bins **170**A, **170**B, or inserts, are positioned within the base **114**. The base **114** includes a bottom wall **172** and sidewalls **174** extending from the bottom wall defining an interior **176** with a depth D. The bins **170**A, **170**B are independently removable from the storage case **18** when the storage case **18** is open (i.e., the cover **118** is in the open position), as shown in FIG. **11**. The bins **170**A, **170**B include relatively tall, or deep, bins **170**A (FIG. **18**) and relatively short, or shallow, bins **170**B (FIGS. **12-17**). The illustrated bins **170**A, **170**B are generally composed of plastic, but may alternatively be made of other materials. Each of the illustrated bins **170**A, **170**B is generally square in shape when viewed from above (FIG. **13**). In other embodiments, the bins **170**A, **170**B may have other shapes (e.g., triangular, octagonal, circular, etc.). In the illustrated embodiment, the bins **170**A, **170**B are arranged within the base **114** as a grid of six (i.e., three rows of two). In other embodiments, the base **114** may be shaped and sized to receive a larger or smaller number of bins, and/or the bins **170**A, **170**B may be arranged within the base **114** in other patterns.

[0134] FIGS. **12-16** illustrate one of the relatively short bins **170**B in detail. The bin **170**B includes a bottom wall **186** and four sidewalls **190** extending generally perpendicularly from the bottom wall **186**. The bottom wall **186** and the sidewalls **190** define a storage recess or space **194**. Each of the relatively short bins **170**B has a height HB (FIG. **14**).

[0135] The bin **170**B also includes ledges **198** formed on an inner surface **202** of the bin **170**B at each corner **206** between adjacent sidewalls **190**. The ledges **198** are positioned at a depth below a top edge **210** of the sidewalls **190** and a height above the bottom wall **186**. In the illustrated embodiment, the ledges **198** are located at a depth that is approximately a quarter of the height HB below the top edge **210**. In some embodiments the ledge **198** may extend around the perimeter of the sidewalls **190**. The ledges **198** are configured to engage and support another bin when, for example, two relatively short bins **170**B are stacked together, as best shown in FIG. **17**. The bottom wall **186** at each corner **206** of the upper bin **170**B is supported on each ledge **198** of the lower bin **170**B. Each of the sidewalls **190** includes a lower, first portion **218** and an upper, second portion **222** that are stepped such that the first portion **218** has a smaller outer dimension than the second portion **222**. As such, the sidewalls **190** of the upper bin **170**B are partially received in the storage space **194** of the lower bin **170**B up to the ledges **198** of the lower bin **170**B. When stacked, the two relatively short bins **170**B have a stacked height SH (FIG. **17**). In other embodiments, more than two bins **170**B may be stacked. Due to the top bin **170**B being partially received in the bottom bin **170**B, the stacked height SH is less than the total height of the two bins **170**B (i.e., two times the height HB of the bins **170**B).

[0136] The bin **170**B further includes ribs **230** formed on an outer surface **234** of the bin **170**B at the corners **206** between adjacent sidewalls **190**. Each of the ribs **230** protrudes outwardly from the outer surface **234** and extends down from the top edge **210** toward the bottom wall **186**. In the illustrated embodiment, each of the corners **206** has two ribs **230**. In some embodiments, ribs may be formed on the sidewalls **190** between the corners **206** in addition to or in place of the ribs **230** formed at the corners **206**.

[0137] As best shown in FIG. **19**, when two or more bins **170**B are stacked, the ribs **230** protrude from the outer surface **234** of the upper bin **170**B to contact and engage the inner surface **202** of the lower bin **170**B to space apart the sidewalls **190** of the stacked bins **170**B. Accordingly, the ribs **230** help maintain a space or gap **238** between the stacked bins **170**B for airflow, thereby inhibiting the stacked bins **170**B from getting stuck together due to vacuum effects. In other words, the gap **238** provides fluid communication between a cavity formed between the inner surface **202** of the lower bin **170**B and the outer surface **234** of the bin **170**B below the ledge **198** of the lower bin **170**B and atmosphere, thereby inhibiting a vacuum from forming when the bins **170**B are stacked.

[0138] In some embodiments, such as the illustrated embodiment, the bin **170**B includes a track **242** formed on the inner surface **202** of the bin **170**B, as best shown in FIG. **16**. The track **242** extends partially along two opposing sidewalls **190** and along the bottom wall **186**. The track **242** is configured to removably receive a dividing wall **246**, or partition, for dividing the storage space **194** into separate compartments. The illustrated dividing wall **246** splits the storage space **194** in half In other embodiments, the track **242** and the dividing wall **246** may be positioned to split the storage space **194** into unequally sized compartments, or the bin **170**B may include multiple tracks for receiving multiple dividing walls. In some embodiments, the track **242** and the dividing wall **246** may be omitted. In the illustrated embodiment, the height of the dividing wall **246** inhibits a bin **170**B from being stacked on a bin **170**B with a dividing wall **246**. In other embodiments, the dividing wall **246** may have a height that does not interfere with stacking the bins **170**B.

[0139] FIG. **18** illustrates one of the relatively tall bins **170**A. The relatively tall bin **170**A is substantially similar to

the relatively short bins **170**B. However, the relatively tall bin **170**A has a height HA greater than the height HB of the relatively short bin **170**B. The stacked height SH of two relatively short bins **170**B, when stacked together, is generally equal to the height HA of the relatively tall bin **170**A. In addition, the height HB of the one relatively tall bin **170**A and the stacked height SH of two relatively short bins **170**B stacked together are each generally equal to the height or depth D of the base **114** of the storage device **18**.

[0140] As best shown in FIG. **20**, a user may remove an upper bin of two stacked relatively short bins **170**B within the base **114** of the storage case **18** to allow access to the storage space **194** of the lower bin **170**B. Accordingly, the stacked bins **170**B within the storage device **18** provide additional storage and organizing space that can be easily reconfigured and arranged as necessary.

[0141] Referring to FIG. **21**, in some embodiments, the storage device system **10** further includes a backpack **310** with a rigid base **314** and first and second flexible shoulder straps **318**, **322** coupled to the base **314**. The base **310** is configured to extend along a user's back when the shoulder straps **318**, **322** extend over the user's shoulders. The length of each shoulder strap **318**, **322** is preferably adjustable to allow the user to position the base **314** in a comfortable position along the user's back. In the illustrated embodiment, the backpack **310** also includes waist belt **326** coupled to the base **314** proximate a bottom end **330** of the base **314** and a handle **334** extending from a top end **338** of the base **314**.

[0142] With continued reference to FIG. **21**, a generally planar face **340** defines a rear surface of the base **314** that is oriented rearward when the backpack **310** is worn by the user. The base **314** defines a longitudinal axis C extending centrally through the top and bottom ends **338**, **330**. The illustrated base **314** is rectangular and includes a length **342** measured parallel to the longitudinal axis C and a width **346** measured perpendicular to the axis C. The length **342** is longer than the width **346** so as to generally correspond with the shape of the user's back.

[0143] The base **314** further includes an attachment interface **350** for receiving and removably coupling a tool storage container **352** to the base **314**. Referring to FIG. **25**, the illustrated tool storage container **352** includes a rigid body **356** defining a longitudinal axis **356** and a rigid lid **360** pivotally coupled to the body **356** (e.g., by a hinge). The illustrated attachment interface **350** also allows other tool storage containers of the storage device system **10** to be removably and interchangeably coupled to the base **314**. For example, the bag **14** and the storage case **18** may be coupled to the base **314**. The configuration of the base **314** advantageously allows the backpack **310** to be used to interchangeably carry a variety of different tool storage containers in a hands-free manner.

[0144] The attachment interface **350** on the base **314** includes a plurality of connection recesses **54**—including small connection recesses **54***a* and large connection recesses **54***b*—like those on the cover **118** of the storage case **18** described above with reference to FIGS. **5** and **6**. An interference projection or wing **142** extends into each connection recess **54** parallel to a longitudinal axis C of the base **314** on opposite sides of the connection recess **54** at one end of the connection recess **54**. The attachment interface **350** further includes a plurality of locking apertures **158**. In the illustrated embodiment, the attachment interface **350** includes two locking apertures **158** spaced in the length direction of the base **314**.

[0145] The tool storage container **352** includes projections on a bottom surface **364** (FIG. **25**) of the body **356**, which are like the projections **46** described above with reference to FIGS. **3** and **4**. The projections on the tool storage container **352** are receivable within the connection recesses **54** on the base **314**, and each of the wings **142** corresponds to and is configured to cooperate with a channel **58** (FIG. **4**) of the projection **46** received by the respective connection recess **54**. The tool storage container **352** also includes a latch assembly like the latch assembly **78** described above with reference to FIGS. **7-10**, with one or more interference portion(s) **94** that are receivable within the locking aperture (s) **158** on the base **314**. In the illustrated embodiment, the lid **360** of the tool storage container **352** includes an attachment interface **350'** that is substantially identical to the attachment interface **350** on the base **314** (FIG. **25**). As such, one or more additional tool storage containers (not shown) can be coupled to the lid **360**, such that the one or more additional tool storage containers can also be carried using the backpack **310**.

[0146] In use, to couple the tool storage container **352** to the backpack **310**, the user positions the bottom surface **364** the tool storage container **352** adjacent the rear surface **340** of the base **314** and aligns the projections **46** (FIG. **4**) with the recesses **54** (FIG. **21**) on the base **314**. The user then slides the tool storage container **352** relative to the base **314** in a first direction **368**, which is perpendicular to the longitudinal axis C and parallel with the width **346**, to attach the tool storage container **352** to the base **314** generally in the manner described above for attaching the bag **14** to the case **18**. Likewise, to decouple and remove the tool storage container **352** from the backpack **310**, the user disengages the latch assembly **78** by moving the interference portion(s) **94** to the unlocking position in the manner described above. The user then slides the tool storage container **352** relative to the base **314** in a second direction **372** opposite the first direction **368**. Once the projections **46** clear the recesses **54**, the tool storage container **352** can be freely removed from the backpack **310**.

[0147] Referring to FIG. **22**, in some embodiments, the storage device system **10** further includes an accessory rail **410** configured for attachment to the attachment interface **350'** on the lid **360** of the tool storage container **352** (or any other tool storage container of the system **10** that includes a similar attachment interface). The accessory rail **410** includes a latch assembly **78** with an interference portion **94** that is engageable with any of the locking apertures **158** on the tool storage container **352**.

[0148] The accessory rail **410** includes a top side **414** defining a planar clamping surface **418** and a longitudinally-extending slot **422**. A variety of different accessories can be coupled to the slot **422**. For example, in the illustrated embodiment, a bar clamp **424** is coupled to the slot **422**. The bar clamp **424** can thus be used to clamp a workpiece against the clamping surface **418** of the accessory rail **410**. A pair of mounting brackets **426** extends downward from the bottom of the accessory rail **410**. Each of the mounting brackets **426** is configured to receive one of the wings **142** on the attachment interface **350'** when the accessory rail **410** is coupled to the lid **360**.

[0149] In use, to couple the accessory rail **410** to the lid **360** of the tool storage container **352**, the user aligns the mounting brackets **426** with the wings **142**. The user then slides the accessory rail **410** relative to the base lid **360** in a first direction **468** and engages the interference portion **94** with one of the locking apertures **158**. Likewise, to decouple and remove the accessory rail **410** from the lid **360**, the user disengages the latch assembly **78** by moving the interference portion **94** to the unlocking position. The user then slides the accessory rail **410** relative to the lid **360** in a second direction **472** opposite the first direction **468**. Once the mounting brackets **426** clear the wings **142**, the rail **410** can be freely removed from the lid **410**. The attachment interface **350'** allows multiple accessory rails **410** to be attached to the lid **360** at the same time. The tool storage container **352** and accessory rails **410** can thus provide a portable workpiece support system.

[0150] FIG. **23** illustrates a tool storage container **552** according to another embodiment and that is usable with the storage device system **10**. Like the tool storage container **352** described above, the tool storage container **552** includes a lid **560** provided with an attachment interface **550**. The tool storage container **552** is thinner than the tool storage container **352**. In some embodiments, for example, the tool storage container **552** is approximately half the thickness of the tool storage container **352**. In some embodiments, the tool storage container **552** defines an overall thickness **570** between about 60 mm and about 70 mm.

[0151] FIG. **24** illustrates a tool storage container **652** according to another embodiment and that is usable with the storage device system **10**. The tool storage container **652** is similar to the tool storage container **552** but is approximately half the width of the tool storage container **552**. In some embodiments, the tool storage container **652** defines an overall width **672** between about 200 mm and about 300 mm.

[0152] FIG. **26** illustrates a tool storage container **752** according to another embodiment and that is usable with the storage device system **10**. Like the tool storage container **352** described above, the tool storage container includes a lid **760** provided with an attachment interface **750**. The tool storage container **752** further includes a plurality of drawers **767** that are slidable between an open position **769** projecting from a front side **771** of the storage container **752** and a closed position **773** in which the drawers **767** are generally flush with the front side **771** of the storage container **752**. The drawers **767** provide convenient access to the contents of the tool storage container **752**, even while other components of the storage device system **10** (e.g., an accessory rail **410**, one or more other tool storage containers, etc.) are coupled to the attachment interface **750**.

[0153] Referring to FIG. **27**, in some embodiments, the storage device system **10** further includes a tool cart **810** with a rigid base **814** having a top side **815** and a bottom side **816** opposite the top side **815**. The base **814** is supported on a plurality of wheels **817** adjacent the bottom side **816**. The illustrated wheels **817** are rotatable casters coupled to the base **814** proximate each of the four corners of the base **814**. A brake **819** is coupled to one of the wheels **817** to secure the tool cart **810** in a desired position. In some embodiments, multiple brakes **819** may be provided for additional security. In addition, other types of wheels **817** may be used, and the wheels **817** may be arranged in any configuration suitable for supporting the base **814** in a stable manner.

[0154] The illustrated base **814** includes a length **842** and a width **846** measured perpendicular to the length **842**. The base **814** defines a longitudinal axis D extending centrally through the base **814** in the length direction. The length **842** is longer than the width **846** such that the base **814** has a rectangular shape. The base **814** further includes an attachment interface **850** for receiving and removably coupling a tool storage container (e.g., the tool storage container **352**) to the base **814**. The illustrated attachment interface **850** also allows other tool storage containers of the storage device system **10** to be removably and interchangeably coupled to the base **814**. The configuration of the base **814** advantageously allows the cart **810** to be used to interchangeably support and transport a variety of different tool storage containers.

[0155] The attachment interface **850** includes a plurality of connection recesses **54**—including small connection recesses **54***a* and large connection recesses **54***b*—like those on the cover **118** of the storage case **18** described above with reference to FIGS. **5** and **6**. An interference projection or wing **142** extends into each connection recess **54** parallel to the longitudinal axis D of the base **814** on opposite sides of the connection recess **54** at one end of the connection recess **54**. The attachment interface **850** further includes a plurality of locking apertures **158**. In the illustrated embodiment, the attachment interface **850** includes two locking apertures **158** spaced in the length direction of the base **814**. As described above, the projections on the bottom surface **364** (FIG. **25**) of the tool storage container **352** and latch assembly **78** cooperate with the attachment interface **850** to removably couple the tool storage container **352** to the base **814**.

[0156] In use, to couple the tool storage container **352** to the tool cart **810**, the user first engages the brake **819** to secure the cart **810**. Next, the user positions the bottom surface **364** the tool storage container **352** adjacent the top side **815** of the base **814** and aligns the projections **46** (FIG. **4**) with the recesses **54** (FIG. **27**) on the base **814**. The user then slides the tool storage container **352** relative to the base **814** in a first direction **868**, which is perpendicular to the longitudinal axis D and generally parallel to the top side **815**, to attach the tool storage container **352** to the base **814** generally in the manner described above for attaching the bag **14** to the case **18**. The brake **819** inhibits the tool cart **810** from rolling under the force of the user attaching the container **352** to the base **814**. Once the container **352** is attached, the user disengages the brake **819** and can then transport the tool storage container **352** by rolling the tool cart **810** along a surface (e.g., the ground).

[0157] Likewise, to decouple and remove the tool storage container **352** from the tool cart **810**, the user engages the brake **819**, then disengages the latch assembly **78** by moving the interference portion(s) **94** to the unlocking position in the manner described above. The user then slides the tool storage container **352** relative to the base **814** in a second direction **872** opposite the first direction **868**. Once the projections **46** clear the recesses **54**, the tool storage container **352** can be freely removed from the tool cart **810**.

[0158] The cart **810** may be a particularly convenient means for transporting multiple storage containers at the same time. In the illustrated embodiment, a second tool storage container **352***b* can be coupled to the lid **360** of the tool storage container **352** in the same manner as described above. In particular, the second tool storage container **352***b* can be slid in the first direction **868** relative to the tool

storage container **352** to attach the second tool storage container **352***b* to the lid **360** of the tool storage container **352**, and the second tool storage container **352***b* can be slid in the second direction **872** relative to the tool storage container **352** to remove the second tool storage container **352***b*. Additional tool storage containers **352***c*, **352***d* can be further stacked in this manner and securely transported together on the tool cart **810**.

[0159] FIG. **28** illustrates a cooler **910** according that is usable with the storage device system **10**. The cooler includes a rigid body **914** and a rigid lid **918** coupled to the body **914**. The body **914** and the lid **918** are insulated or are made of an insulating material. The lid **918** may be pivotally coupled to the body **914** in some embodiments or alternatively may be removably coupled to the body **914**. The cooler **910** includes a plurality of projections (not shown) like the projections **46** described above that allow the cooler **910** to be removably coupled to other components of the storage device system **10**. Likewise, the cooler **910** also includes a latch assembly **78**.

[0160] Referring to FIG. **29**, in some embodiments, the storage device system **10** further includes a tool cart **1010** with a rigid base **1014** having a top side **1015** and a bottom side **1016** opposite the top side **1015**. The illustrated base **1014** includes a length **1042** and a width **1046** measured perpendicular to the length **1042**. The length **1042** is longer than the width **1046** such that the base **1014** has a rectangular shape. A first end **1047** of the base **1014** extends between the top side **1015** and the bottom side **1016** in the width direction, and a second end **1048** of the base **1014** extends between the top side **1015** and the bottom side **1016** opposite the first end **1047**. The base **1014** defines a longitudinal axis E extending centrally through the base **1014** in the length direction, through the first and second ends **1047**, **1048**.

[0161] In the illustrated embodiment, the base **1014** is supported on first and second wheels **1017***a*, **1017***b* adjacent the second end **1048**. The cart **1010** includes a handle **1049** extending from the first end **1047**. The illustrated handle **1049** is generally U-shaped and includes a grip portion **1049***a* spanning between two leg portions **1049***b*. The handle **1049** may be slidable relative to the base **1014** in order to extend or retract the handle **1049**.

[0162] The base **1014** further includes an attachment interface **1050** for receiving and removably coupling a tool storage container (e.g., the tool storage container **352**) or multiple tool storage containers to the base **1014** generally in the same manner as described above with respect to the tool cart **810** illustrated in FIG. **27**.

[0163] Referring to FIG. **30**, in some embodiments, the storage device system **10** further includes an adjustable shelf unit **1110**. The adjustable shelf unit **1110** includes a frame **1114** and a plurality of shelves **1118** movably coupled to the frame **1114**. The shelves **1118** can thus be positioned on the frame **1114** at a variety of different spacings. In the illustrated embodiment, the frame **1114** includes a bottom portion **1122** with a plurality of wheels **1126** (e.g., casters) that support the frame **1114**. As such, the frame **1114** is mobile and can be conveniently moved about a job site. In other embodiments, the frame **1114** may be secured to a wall, the interior of a vehicle, or other fixed structures, for example.

[0164] Referring to FIG. **31**, each of the shelves **1118** includes an attachment interface **1150** that is compatible with any of the storage containers of the storage device system **10**. Thus, as illustrated in FIG. **30**, the tool storage container **352** or any other tool storage container of the system **10** can be removably coupled to any of the shelves **1118**. In addition, the shelves **1118** can be spaced such that the lid **360** of the container **352** is openable even while the body **356** of the container **352** remains coupled to the shelf **1118**.

[0165] Referring to FIG. **32**, in some embodiments, the storage device system **10** further includes two clamp rails **1210** configured for attachment to the attachment interface **350'** on the lid **360** of the tool storage container **352** (or any other tool storage container of the system **10** that includes a similar attachment interface). Each clamp rail **1210** includes a latch assembly **78** with an interference portion **94** that is engageable with any of the locking apertures **158** (FIG. **25**) on the tool storage container **352**.

[0166] Each clamp rail **1210** includes first and second pairs of clamping jaws **1222** located at opposite ends of the clamp rail **410**. Each set of clamping jaws **1222** may be adjustable to vary a distance between the individual jaws **1222**, or the individual jaws **1222** may be spaced at a fixed spacing. In some embodiments, the individual jaws **1222** may be resiliently deformable to apply a resilient clamping force on a workpiece **1225** (e.g., a 2×4). The clamping jaws **1222** are configured to support the workpiece **1225** above the lid **360** of the container **352**. The tool storage container **352** and clamping rails **1210** can thus provide a portable workpiece support system.

[0167] FIGS. **33**A-**33**F illustrate a tool storage container system **3301**. The tool storage container system **3301** may include a first mounting rail **3302** and a second mounting rail **3303**. In some embodiments, the mounting rails **3302**, **3303** may be on a single storage container. In other embodiments, the mounting rails **3302**, **3303** may be on separate storage containers. The second mounting rail **3303** may be spaced apart from the first mounting rail **3302**. A first clip **3304** may be removably mounted to the first mounting rail **3302**. The first clip **3304** may include a first accessory hook **3305**. A second clip **3306** may be removably mounted to the second mounting rail **3303**. The second clip **3306** may include a second accessory hook **3307**. The first and second accessory hooks **3305**, **3307** may be facing outwardly from the storage container **3301** to receive an accessory **3308**. The accessory **3308** may include a first loop **3309** and a second loop **3310**. In such embodiments, the first accessory hook **3305** may be received in the first loop **3309**, and the second accessory hook **3307** may be received in the second loop **3310**. Some embodiments include the accessory **3308** having a plurality of hooks **3311** for hanging items. The hooks **3311** may be disposed between the mounting rails **3302**, **3303** and may also be integrally formed with the loops **3309**, **3310** of the accessory **3308**. Other embodiments include the accessory **3308** having a storage bin **3312**. The storage bin **3312** may be disposed between the mounting rails **3302**, **3303** and may also be integrally formed with the loops **3309**, **3310** of the accessory **3308**. In many embodiments, the first clip **3304** may be resiliently snapped onto the first mounting rail **3302**, and the second clip **3306** may be resiliently snapped onto the second mounting rail **3303**. The clips **3304**, **3306** can be used to attach an extension cord, power cord, or some other length of cord **3313** to the container **3301**. The rails can be used to attach other organizers to the tool storage system. The tool storage container system **3301** may include, in some embodiments, a mount **3314** resiliently snapped onto

the first and second mounting rails **3302**, **3303**. In such embodiments, the bin **3312** may be slidably and removably disposed on the mount **3314**.

[0168] FIG. **34** illustrates a tool storage container **400**. The container **400** includes a cabinet **402** that functions as a bulk storage compartment. The cabinet **402** has small shelves or ledges **404** on the side walls will allow users to stack in other organizers **406**. The small shelves/ledges **404** will allow users to add their own full width shelving as needed.

[0169] FIGS. **35** and **36** illustrate open cases **500** and **502** that are attachable to the top of the container **300** (FIGS. **33**A-**33**F) via clips **504** and allow users bulk storage. An interior ring of elastic or stretchy material **506** allows users to secure items inside of the open case **500**, **502**.

[0170] FIGS. **37** and **38** illustrate a rolling trolley or cart **600** that interact and connect to modular storage system described above. For example, the cart **600** includes recesses **602** that are sized to receive projects **46** (described above) so that the tool storage device **614** is held in position on the cart **600**. The cart includes wheels **604** and a brake **608** that is on a lever. The brake **608** includes a rubber like substance **610** that grips the floor. When the user steps on the brake **608** with their foot **612**, the trolley **600** is prevented from moving so that the tool storage device **614** can be pushed into place.

[0171] FIG. **39** illustrates a tool storage container having a wheel lock. The wheel lock includes a lever **1** that is only accessible when a housing lid **2** is open. The housing lid **2** may include a lock that inhibits access within the housing without a key, key pad entry or the like. Lateral movement of lever **1** causes linkages **3** to move bolt(s) **4** horizontally along their major axis. When lever **1** is laterally moved to one extreme bolt(s) **4** are fully retracted and wheels **5** are free to rotate. When lever **1** is laterally moved to the other extreme bolt(s) **4** are fully extended and engage wheel(s) **5** preventing them from rotating. Preventing the wheel(s) **5** from rotating may provide theft protection and a workplace safety enhancement.

[0172] FIG. **40** illustrates an alternative embodiment of a tool storage container having a wheel lock. In the embodiment of FIG. **40**, the Lever **1** is only accessible when housing lid **2** is open. Vertical movement of lever **1** causes linkages **3** to move bolt(s) **4** vertically along their major axis. When lever **1** is moved vertically to one extreme bolt(s) **4** are fully retracted and wheels **5** are free to rotate. When lever **1** is moved vertically to the other extreme bolt(s) **4** are fully extended and engage wheel(s) **5** preventing them from rotating. Preventing the wheel(s) **5** from rotating may provide theft protection and a workplace safety enhancement. In other embodiments, the activation mechanism (e.g., lever **1**) is placed in other locations within the housing, or allow external access to lever **1**, or functionally similar device, can be envisioned and are included in this disclosure.

[0173] FIG. **41** illustrates a side mounted cleat for a modular storage box. The side mounted cleat includes cleat receptacles and detachable mounts. The detachable mounts removably couple the cleat to mounting rails of the storage box. The cleat receptacles received corresponding feet or cleats to couple compatible items to the side mounted clean and the storage box. The detachable mount can be a clip, a strap, a snap, snapped on, etc. The side mounted cleats allow items compatible with the modular storage to be mounted onto the sides of boxes. The storage container **4101** may include a first mounting rail **4102** and a second mounting rail **4103**. The second mounting rail may be spaced apart from the first mounting rail. A mount **4104** may be detachably connected to the first mounting rail and the second mounting rail. The mount may include at least one cleat receptacle **4105** defined therein. In some embodiments, the first and second mounting rails **4102**, **4103** may be located at respective corners of the storage container **4101**. In such embodiments, the mount **4104** may span across an entire side of the storage container. The mount may include a first mount end **4106** and a second mount end **4107**. At least one of the first and second mount ends **4106**, **4107** may include a closure latch **4108**. In some embodiments, the mount **4104** may be configured to resiliently snap on and off of the first and second mounting rails **4102**, **4103**. In many embodiments, the cleat receptacle **4105** may be defined in a rigid plate member **4109** of the mount **4104**.

[0174] FIG. **42** illustrates toolbox **4201** or tool storage container that can be converted to a cooler. An insulated lid insert **4202** may be removable such that the insulated lid insert is used when the toolbox is to be used as a cooler, but removed when the toolbox is to be used for storage of tools. The cooler insert **4203** is molded to fit securely inside the tool box and is insulated (e.g., with foam) to convert the toolbox into a cooler. The cooler insert may be removed.

[0175] FIG. **43** illustrates a soft sided back that can be mounted to a side (e.g., front side) of a storage box or tool storage container. A soft-sided bag (or other storage device) is mounted to the front of the modular storage box via mounting clips that mount to the mounting rails. Any suitable fastener can be used such as snaps, clips, hook-and-loop fasteners, etc. The back of the soft bag includes a receiving sleeve that slips over the tiedown rail on the modular storage box. This allows the soft bag (or other storage device) to be securely but removably mounted to the front of the storage box to add functionality and modularity to the storage box. The storage container **4301** may include a first mounting rail **4302** and a second mounting rail **4303** spaced apart from the first mounting rail. A tiedown rail **4304** may be disposed between the first and second mounting rails **4302**, **4303**. An auxiliary storage container **4305** may be mounted to the first and second mounting rails **4302**, **4303**. The auxiliary storage container **4305** may include a receiving sleeve, and the tiedown rail **4304** may be disposed in the receiving sleeve. In many embodiments, the auxiliary storage container **4305** may include a soft-sided bag. The auxiliary storage container **4305** may be removably connected to each of the first mounting rail **4302**, the second mounting rail **4303**, and the tiedown rail **4304**. To attach to the first and second mounting rails **4302**, **4303**, many embodiments include the auxiliary storage container **4305** having a first resilient mounting clip **4306** removably connected to the first mounting rail and a second resilient mounting clip **4307** removably connected to the second mounting rail.

[0176] FIG. **44** illustrates a workstation **4401** for use with tool storage devices. The workstation (e.g., a cart, a wheeled work bench, a stationary bench), etc. includes modular attachment cleats **4402** that the pieces of the modular storage system secures to. The attachment cleats may be similar to the cleat receptacles illustrated in FIG. **41**. The work station may include extendable table arms **4403**.

[0177] FIG. **45** illustrates a modular attachment plate **4501** that includes a plate body **4502**, at least one cleat receptacle opening **4503** defined in the plate body, and a latch receptacle **4504** defined in the plate body. The plate includes a

receptacle for a cleat of a tool storage device. In this embodiment, there are two cleat receptacles and one latch receptacle. In alternative embodiments, only one cleat receptacle may be used, the latch receptacle may not be used, and/or more than two cleat receptacles may be used. The plate may be mounted such that a cleat inserted into the cleat receptacle has space behind the plate to move into. In many embodiments including a storage container connected to the modular attachment plate **4501**, the storage container may include a recess disposed adjacent the at least one cleat receptacle opening **4503**. In some embodiments, such as in soft storage bags (e.g., a backpack), the plate may be mounted to a storage container including a fabric or flexible material (e.g., neoprene) that allows the cleat to be inserted into the cleat receptacle. The flexible material may be connected to the plate body **4502** of the modular attachment plate **4501** and the flexible material may flex away from the at least one cleat receptacle opening **4503** to form a recess. In one embodiment, the flexible material is mounted to the back of the plate body **4502**. For example, the flexible material may be in a plane parallel to a plane of the plate body **4502**. In such an example, when a cleat is inserted into one or more of the cleat receptacle openings **4503**, the flexible material deforms to allow the cleat to pass through and rest behind the plate body **4502**. The modular attachment plate **4051** may further include one or more attachment openings **4505** defined in the plate body **4502** to receive fasteners such as rivets, bolts, screws, thread, etc. to connect the modular attachment plate to a surface.

[0178] FIG. **46** illustrates the plate of FIG. **45** attached to a storage container **4601**. In some embodiments, the storage container **4601** may include a backpack. The backpack **4601** may include at least one carrying strap **4602**.

[0179] FIG. **47** illustrates a storage cart/work space **4701** that includes plates having cleat receptacles, similar to the cleat receptacles of the plate in FIG. **45**. Container compatibility can be incorporated into steel storage (e.g., mobile work stations, steel tool boxes, etc.). In the embodiment above, a shelf **4702** includes the cleat receptacles of FIG. **45** that allow compatible tool storage boxes **4703** or devices to be secured in place on the steel storage. The shelf may be on a roller device that allows the shelf to be pulled out.

[0180] FIG. **48** illustrates the cleat receptacles **4801** of FIG. **45** integrated with a truck tool box **4802**. A tool box is mounted in the bed **4803** of the truck **4804** and includes cleat receptacles on a top surface of the lid (or on a side wall surface). The cleat receptacles allow compatible tool storage boxes or devices to be secured in place.

[0181] FIG. **49** illustrates the cleat receptacles **4901** of FIG. **45** mounted on a wall **4902** of the truck bed **4903**. The cleat receptacles allow compatible tool storage boxes or devices to be secured in place.

[0182] FIG. **50** illustrates the cleat receptacles **5001** of the cleat plate of FIG. **45** mounted to a floor or wall **5002**. A bracket **5003** with the cleats **5004** is received in the cleat receptacles to mount the bracket to the floor or wall. A shelf **5005** is attached to the bracket to mount the shelf to the floor or wall.

[0183] FIG. **51** illustrates a hook **5101** having a cleat **5102**. The cleat can be attached to the cleat receptacles described above to attach the hook to a device having the cleat receptacles. In one embodiment the hook can include a pivot **5103**.

[0184] FIG. **52** illustrates an organizing tray **5201** attached to a modular storage box **5202**. The tray includes a magnetic tray portion **5203**. The tray includes cleats on the bottom of the tray that clips into the cleat receptacles (see FIG. **41**) on the top of a modular storage box. At least a portion of the tray can be magnetic to prevent spillage of magnetic items such as bolts, tools, screws, etc.

[0185] FIG. **53** illustrates soft storage bags **5301** (e.g., totes or tool bags) having a hard (plastic) plate **5302** on the bottom that allows the soft bag to be secured to the systems described above. That is the plate includes cleats **5303** that can be received in cleat receptacles. The bottom plate may be removable or attached to existing bags with, for example, fasteners **5304** to retrofit the bags to be compatible with the storage system described above.

[0186] FIG. **54** illustrates a belt **5401** with a cleat receptacle **5402** that can receive any tool or bag **5403** that has a cleat **5404**, such as the cleats discussed above. The tools/bags may be on a swivel such that when the wearer of the belt bends forward, the bag stays upright. For example, the user can strap various bags to his/her belt to transport tools/supplies from a truck to a work location and unload the tools/supplies at the work location.

[0187] FIGS. **55** and **56** illustrate that in another embodiment, a surface **5501** with retractable/foldable legs **5502** has cleat receptacles **5503** that can be used to snap a tool box having a cleat to. In an alternative embodiment, the foldable legs can be mounted directly to the bottom of a box, such as the box of FIG. **41**.

[0188] FIG. **57** illustrates a modular storage box **5701** having a light **5702** (e.g., LED) that is mounted to a boss **5703** in the lid **5704** of the modular storage box. The light can be adjustable to provide light to a desired portion of the box.

[0189] FIG. **58** illustrates an adaptor shelf **5801** having cleats **5802** and cleat receptacles **5803** that can be used with storages boxes **5804** that do not have cleats and/or cleat receptacles compatible with those discussed above. The shelving unit includes a bottom plate and a top plate. The bottom surface of the bottom plate includes cleats to be attached to a receptacle surface having cleats. The top surface of the bottom plate is adapted to interact with a non-modular storage system (e.g., storage boxes without cleats and/or cleat receptacles). The top surface of the top plate can have the cleat receptacles such that the shelving unit can be loaded on top of and beneath boxes having the cleats and cleat receptacles (e.g., box of FIG. **41**). Also, the rails **5805** that support the top and bottom plates to one another can be adjustable such that any suitable height of the shelving unit can be used.

[0190] Referring to FIG. **59**, similar to FIG. **58**, other tools can be adapted to be mounted between the top and bottom plates. For example, a speaker **5901** or vacuum **5902** having a cleat can be mounted to the bottom plate.

[0191] FIG. **60** illustrates a battery clamp **6001** that can be used and can compress along the sides of a battery **6002**. The bottom of the clamp includes a cleat **6003** to secure the battery and clamp to a cleat receptacle.

[0192] FIG. **61** illustrates a stack lock assembly **6101**. A stack of modular boxes **6102** (e.g., box of FIG. **41**) can be locked together with the stack lock assembly **6101**. A base cleat **6103** can be secured to the bottom surface of a bottom box (e.g., the base cleat can receive a cleat on the bottom of the bottom box). The top cleat, or adjustable cleat **6104**, can

be secured to the top surface of a top box (e.g., be slid into a cleat receptacle on the top of the top box). The base cleat **6103** may be permanently or removably connected to a rail **6105**. The top cleat can slide along the rail **6105** into position. Stated another way, the adjustable cleat **6104** may be translatably disposed on the rail **6105**. Once in position, the adjustable cleat can be locked into place with a lock mechanism, for instance, a padlock **6106** to prevent uncoupling of the top and bottom boxes (or others in between) and prevent opening of the boxes.

[0193] FIG. **66** illustrates a fold-out or slide out work surface **6601** has cleats that can be secured to the top of a box **6602** having cleat receptacles (e.g., box of FIG. **41**) to create a mobile work station.

[0194] FIG. **67** illustrates a cleat assembly **6701** that is used to lock devices with a cleat **6702** received in a cleat receptacle **6703** defined in a receiver body **6707**. The cleat receptacle **6703** may include a wide portion **6705** and a narrow portion **6704**. In some embodiments, to lock the items in place, after sliding the cleat **6702** into the narrow portion **6704** of the cleat receptacle **6703**, a latch may be inserted into a latch receptacle **6706**. In other embodiments, however, this single cleat **6702** can lock an item into place without use of the latch or latch receptacle **6706**. The body of the cleat **6702** includes a through hole **6708** that receives a slide **6709**. The slide **6709** may include detents that interact with a spring loaded bearing. The slide **6709** may slide within the through hole **6708** and may be as long as the cleat receptacle **6703** (i.e., presses against the front and rear faces of the cleat receptacle. The cleat **6702** is inserted first into the wide portion **6705** and then slid toward the rear in a direction toward the narrow portion **6704** of the cleat receptacle **6703**. During the insertion and sliding of the cleat **6702**, the slide **6709** may stay in place with respect to the cleat receptacle **6703**. The detent and spring loaded bearing may then secure the cleat **6702** along the slide **6709** and in the rearward position within the cleat receptacle **6703**. In some embodiments, the slide **6709** may be freely translatable relative to the cleat **6702** in a first direction but not freely translatable in a second direction (opposite the first direction). In some embodiments, the slide **6709** interacts with walls of the cleat receptacle **6703**, but in other embodiments, the slide may also interact with the latch.

[0195] FIG. **68** illustrates a single cleat **6801** can be used similar to the embodiment of FIG. **67**. The cleat **6801** may be connected to a lock portion **6802** via a hinge **6803**. The lock portion **6802** may be biased in a first rotational direction (e.g.—with a spring **6804**). The lock portion rotates up (i.e., clockwise in FIG. **68**) to move out of the way when the body is pressed into the opening/wide portion of the cleat receptacle and springs back into place (in the position as shown in FIG. **68**) once the body is slid into the narrow portion of the cleat receptacle. To remove the cleat, the lock portion is rotated back toward the cleat (i.e., clockwise) to allow the cleat to be slid toward the wide portion of the cleat receptacle. The lock portion **6802** may include a hook **6805** that may engage the receiver body to prevent movement of the cleat **6801** when the cleat occupies the narrow portion of the cleat receptacle.

[0196] FIG. **69** illustrates an accessory holder **6901** that can be mounted to a box, such as the box of FIG. **41**. The accessory holder **6901** may include a holder body **6902** including a mounting bracket portion **6903**. An accessory attachment rail **6904** may be connected to the holder body **6902** adjacent the mounting bracket portion **6903**. At least one tubular passage **6905** may extend from the holder body **6902**. In many embodiments, the at least one tubular passage **6905** is configured to removably receive an elongate accessory. The side rail of this piece can replace the side rail of the modular storage box of FIG. **41**. This holder may include a tubular passage **6905** with a circular cross-section to function as a handle holder (e.g., for holding a broom handle, a conduit bender handle, etc.) and may also include a tubular passage with a rectangular cross-section as a level holder. Alternative embodiments can be used to hold any accessory.

[0197] FIG. **70** illustrates a plate **7001** that includes cleats on the bottom surface (not shown) that mount to the top surface of a box having cleat receptacles (e.g., box of FIG. **3**). Along the perimeter of the top surface are square tube holders **7002**. The square tube includes pin holes **7003** that receive a pin **7004** to secure the square tube **7005** in place when in the square tube holder. In the illustrated embodiment, a vice **7006** is mounted and slides along the square tube to hold a workpiece. Any other suitable accessory can be mounted to the square tube.

[0198] FIG. **71** illustrates a 5-piece crate **7101** that can be assembled by the user. The four sides **7102** include cut-outs **7103** that accept the cleat discussed above. The bottom piece **7104** includes cleats and latches to lock onto the top of other tool storage containers described above.

[0199] FIGS. **72-74** illustrate trays **7201** below including cleats **7202** on the bottom of the trays that interact with the cleat receptacles **7203** on a top or lid of tool box **7204**. The outside shape of the trays also conforms to the inside surface of the toolbox. Thus, a user can travel with the trays secured inside the box and then secure the trays on the top of the box when being used.

[0200] FIGS. **75** and **76** illustrate a foldable table **7501** in the open (FIG. **75**) and closed (FIG. **76**) positions. The center section **7502** of the table includes cleats and a locking mechanism that secures the table to the top **7503** of a tool box. As shown in FIG. **76** (in the closed position), the bottom surface of the open table includes supports **7504** that engage the top surface of the tool box and limit travel of the table sides such that, in the open position, the three pieces are level to one another. In alternative embodiments, additional or different supports may be used, such as arms that engage with the side of the tool box, or other supporting means.

[0201] FIG. **77** illustrates an accessory case **7701** that secures to the system via a single cleat **7702**. The small size of the case may be ideal for smaller items such as drill bits. Multiple individual cases may be stored on the top surface of a tool box.

[0202] FIG. **78** illustrates a piece **7801** that can cover the top of a tool box to be a seat. The bottom of the piece includes cleats **7802**, and the top piece can be a cushion **7803** that is comfortable for sitting. Additional pieces may include a backrest that attaches to the handles of the rolling box.

[0203] FIG. **79** illustrates a storage container **7901**. The storage container **7901** may include a first mounting rail **7902** and a second mounting rail **7903** spaced apart from the first mounting rail. The storage container **7901** may further include a bin **7904** connected to the first and second mounting rails **7902**, **7903**. Stated another way, the bin **7904** may mounts to the side of a tool box **7901** and may attach to the extruded metal supports **7902**, **7903** located at the corners of the box. The bin may be removably attached or may

surround the extruded metal to be permanently secured. Any size or shape bin can be used. In many embodiments, the bin **7904** may be configured to resiliently snap on and off of the respective first and second mounting rails **7902**, **7903**.

[0204] FIGS. **80** and **81** illustrate a folding crate in the assembled and folded positions, respectively. The folding crate may also be called a collapsible storage crate **8001**. The crate **8001** may include a crate bottom **8002** having a crate exterior surface **8003**. The bottom **8002** of the crate **8001** may include at least one cleat **8004** (discussed above) to attach the crate to a corresponding cleat receptacle located on a receptacle surface (such as on a lid of a tool box with the cleats being received in cleat receptacles). The bottom surface of the crate (or a 5-piece flat pack/self-assembled crate) includes cleats that can be received in the cleat receptacles described above to secure the crate to a surface to which the cleat plate (e.g., plate of FIG. **45**) is attached. To connect the crate **8001** to a receptacle surface, the at least one cleat **8004** is inserted into a corresponding cleat receptacle, and the crate is translated relative to the cleat receptacle, thereby locking the cleat in the corresponding cleat receptacle. The crate may further include a latch **8005** to attach the crate to a receptacle surface such as a lid of a tool box as discussed above. Although not shown, in some embodiments, the top half (portion) of the front and back sides may have cleat receptacles such that, when the crate is folded flat, another modular device may be attached to the top of the folded crate. Put another way, the inside surface of the assembled crate of FIG. **80** may include cleat receptacles such that the top surface of the folded crate of FIG. **81** can receive the cleats of another modular device (e.g., another folded crate). In some instances, the cleat receptacles may be cutouts in the sides of the crate (e.g., as in FIG. **71**). In such embodiments, the cleat receptacles of one side of the assembled crate of FIG. **80** are rotated 180° from the cleat receptacles of the opposite side. Also, in some embodiments, the bottom half of the sides of the crate may have cleat receptacles corresponding to the respective top half such that each side can receive a modular device when the crate is assembled. In alternative embodiments, the bottom halves of the sides do not have cleats but rather have cutouts that provide adequate space for the cleat receptacles of the top halves to receive a cleat when the crate is in the folded position.

[0205] FIG. **82** illustrates a clamp **8201** that includes a cleat **8202**. The single cleat can be used to clamp any suitable item (i.e., not just batteries). In the embodiment illustrated, a knob **8203** is attached to a threaded rod **8204** that rides in a slot **8205** in the cleat. The wall **8206** is threaded onto the threaded rod and moves along the rod as the knob is spun.

[0206] FIG. **83** illustrates a bag/box/item **8301** having a cleat **8302** may be hinged or swiveled to a cleat receptacle **8303** on a user's belt **8304** such that the item remains upright even when the user bends over.

[0207] FIG. **84** is a side view of a shelving unit **8401**. The vertical mounting rail **8402** may be fixed between the floor and the ceiling or fixed to a wall. The horizontal rails **8403** may be mounted along the vertical mount (e.g., using e-track or other means for selectively securing the horizontal rails along the vertical mount). The horizontal rails include a sliding rail **8404** that slides along the horizontal rail. Attached to the top of the (or in between two) sliding rails is a modular mounting plate **8405** that has receptacles for receiving the cleats. Once a box with the cleats is attached, the box may be pushed against the wall (as in the top mounting plate. To access the contents of the box with a lid that flips up, the box can be slid outward away from the wall, thereby giving the lid enough room to open without hitting the horizontal rails or box of the one above

[0208] FIG. **85** illustrates a separator **640** with pockets **641** that may be used to separate the inside contents of a box. The separator may slide into corresponding grooves on the inside of the box **642**.

[0209] FIG. **86** illustrates a storage container **8601**. The storage container **8601** may include a first mounting rail **8602** and a second mounting rail **8603**. The second mounting rail **8603** may be spaced apart from the first mounting rail **8602**. A table assembly **8604** may be connected to the first and second mounting rails **8602**, **8603**. Stated another way, the table assembly **8604** may be mounted to the side of a modular box **8601**. The table assembly **8604** may include a platform **8605**, and the platform may be rotatable relative to the first and second mounting rails **8602**, **8603**. Stated another way, the platform **8605** may be hinged so that the platform may flip up for use or down for storage. In many embodiments, the table assembly **8604** is configured to resiliently snap on and off of the respective first and second mounting rails **8602**, **8603**.

[0210] FIG. **87** illustrates another embodiment of a storage container **8701**. The storage container **8701** may include a first mounting rail **8702** and a second mounting rail **8703**. The second mounting rail **8703** may be spaced apart from the first mounting rail **8702**. A bag holder assembly **8704** may be connected to the first and second mounting rails **8702**, **8703**. Stated another way, the bag holder assembly **8704** (which may include a garbage bag holder holding a disposable garbage bag **8707**) may be mounted to the side of a box. The bag holder assembly **8704** may include a bag receiving rod **8705**. The bag receiving rod **8705** may span across an entire side of the storage container **8701** in some embodiments. The bag receiving rod **8705** may span in any appropriate way, but some embodiments include the bag receiving rod formed into a semi-circle as it spans from the first mounting rail **8702** to the second mounting rail **8703**. The bag receiving rod **8705** may be swung down when not in use. In many embodiments, the bag holder assembly **8704** may be configured to resiliently snap on and off of the respective first and second mounting rails **8702**, **8703**. In still further embodiments, the storage container **8701** may further include a wheeled cart **8706** supporting the storage container.

[0211] FIG. **88** illustrates a modular receptacle plate **670** that includes hangers **671** that allow the plate to be hung from the side of a truck, the side of a bucket (e.g., on a bucket lift truck), on a horizontal rail or 2×4, etc.

[0212] FIG. **89** illustrates one or more modular receptacle plates having cleats **680** may be mounted to a frame that includes a hitch for securing to a hitch receptacle of a truck.

[0213] FIGS. **90** and **91** illustrate a water cooler **9001** (or water bottle) having cleats **9002** on the bottom to be secured to a mobile tool box.

[0214] FIG. **92** illustrates two strap mounting portions (e.g., one with a fixed end, one with a lockable end; two lockable ends) may have cleats that slide into the cleat receptacles. A webbing strap may be secured to the strap mounting portions and selectively tightened to secure an item between the two strap mounting portions.

[0215] FIG. **93** shows a tray **149** closed and FIG. **94** shows the tray **149** open. The tabletop **249** can slide (or fold) away to reveal the tray and its contents. When closed (or when open) the table top pieces can be used as a work station. The bottom of the tool tray/tabletop combo includes can interact with a compatible tool storages boxes such as the lid to the rolling box of FIG. **39**.

[0216] FIG. **95** illustrates an insert **5101** for a box **5102** that is configured to hold a combination wrench set (e.g., either fixed or ratcheting). The insert may be easily removed from the box for convenience of the user.

[0217] FIGS. **96-100** illustrate a storage container **9601**. The storage container **9601** may include a container body **9602**. An upright member **9603** may extend upwardly from the container body **9602**. A handle **9604** may be connected to the upright member **9603**. The handle **9604** may include an angled portion **9605**. A platform **9606** may be attached to the handle **9604** of the rolling toolbox (e.g., tool box of FIG. **39**). In many embodiments, the platform **9606** is rotatably attached to the handle **9604**. The platform can be placed in a use position and may also be folded away to a storage position when not in use. In the deployed state (FIGS. **96-98**), a support arm **9607** may extend from the platform **9606** and rest on the angled portion **9605** of the handle **9604** (shown in FIG. **98**). When in the undeployed state (FIGS. **99** and **100**), the platform **9606** folds away to allow the user to use the handle **9604**. A detent mechanism or a clip may be used to hold the platform **9606** in place (i.e., prevent the platform from flapping around).

[0218] FIG. **101** illustrates a plate **1011** that can be secured in place. For example, the plate includes holes or receptacles **1012** for locking feet of a tool storage container e.g., PACKOUT system by Milwaukee Electric Tool) and latch receptacles **1014** that interact with a modular storage system. The plate includes screw holes (or other fastening mechanisms) **1016** that can be used to secure the plate to, for example, a floor, a wall, the bed of a truck, the wall of a van, etc. The plate is made of metal (e.g., stamped steel) whereas the storage boxes (or other suitable compatible products) are typically made of plastic. Making the plate of metal increases the resilience to bumps, kicks, rattles, vibrations, etc. (such as in a vehicle or truck) compared to plastic. Stamping the steel to make the product also is likely to reduce manufacturing and materials cost.

[0219] FIGS. **102** and **103** illustrate an alternative embodiment of the plate **1011** of FIG. **101**. The plate of FIGS. **102** and **103** may be less expensive and easier to manufacture in some embodiments than the plate of FIG. **101**.

[0220] FIG. **104** illustrates a modular connection system **1041** for a tool storage container to a shelving use. E tracks or X tracks are typically mounted to a wall and brackets are used to secure hooks, brackets, latches, loops, etc. to the e-tracks. FIG. **104** illustrates an E-track compatible arm **1042** that can be used to support tool storage containers and the like. While the illustrated arm is configured for use with an E-track, in other embodiments, the arm can be configured to attach to other wall mount devices (e.g., Unistrut, slatwall, pegboard, or the like). In yet other embodiments, the arm may attached directly to a wall, such as by fasteners.

[0221] The arm **1042** includes engaging feet **1043** that are compatible with e-track and a locking mechanism (latch) **1044** for securing the arm in place along the e-track (or x track). Extending from the e-track engaging portion is a two-piece arm **1045** that is held together via rivets through the rivet holes **1046** (or other attachment means such as welding, screws, bolts, clips, etc.). In alternative embodiments, the two-piece arm can be made of a single piece of metal that is bent at the bottom portion of the arm.

[0222] The top side of the arm **1042** includes attachment holes **1047** that are used to attach the arm to a piece compatible with a tool storage modular attachment system (e.g., PACKOUT system by Milwaukee Electric Tool). For example, a single row of securing feet receptacles from the plate discussed and shown above can be used. The e-track arm can be made of metal, plastic, a combination of metal and plastic, or other suitable materials.

[0223] This shelving concept allows a user to adapt a wall to accept compatible products (tool boxes, storage boxes, work stations, etc.) using e-track, which is commonly used in vans, trucks, shop walls, etc. The user can place the e-track in any suitable location along the wall, and then move the arms along the e-track whenever he/she sees fit. This concept allows the modular securing system to be adapted to the e-track modular securing system.

[0224] FIG. **105-107** illustrate a storage container **1051**. The storage container **1051** includes a container body **1052**. At least one telescopic upright member **1053** extends upwardly from the container body **1052**. A handle **1054** may be pivotable relative to the upright member **1053** from a storage position (shown in FIG. **107**) to a use position (shown in FIG. **106**). The handle **1054** may be disposed closer to the container body **1052** in the storage position than in the use position. The storage container **1051** may further include an upper chassis **1055** connected to the upright member **1053**. In such embodiments, the handle **1054** may be pivotably connected to the upper chassis **1055**. The upper chassis **1055** may include at least one upper aperture **1056** defined therein. In some embodiments, the upper chassis **1055** may further include an upper adjustable partition **1057** disposed in the upper aperture **1056** to divide the aperture into variable sized openings. In such embodiments, the upper adjustable partition **1057** may be a removable card and the upper chassis **1055** may include a series of spaced upper slots **1058** configured to receive the card. A detent mechanism may be disposed between the upper chassis **1055** and the handle **1054** to lock the handle in the use position. The storage container **1051** may further include a lower chassis **1059**. The lower chassis **1059** may be connected to the container body **1052**, and the lower chassis may be generally aligned with the upper chassis **1055**. The lower chassis **1059** may include at least one lower aperture **1060** defined therein. In many embodiments, the lower aperture **1060** may be a recess and not a through hole in the lower chassis **1059**. the lower chassis **1059** may also include a lower adjustable partition **1061** disposed in the lower aperture **1060**. The lower adjustable partition **1061** may also be a removable card insertable in a series of lower slots **1062**. With this configuration, various tools and other items **1063** are able to be contained by the upper and lower chassis **1055**, **1059**.

[0225] FIGS. **108-110** illustrate a storage container **1081**. The storage container **1081** includes a container body **1082**. An elongate member **1083** may be connected to the container body **1082**. The elongate member **1083** may include a longitudinal slot **1084** defined therein. In many embodiments, this longitudinal slot **1084** may be a T-slot. An accessory attachment insert **1085** may be removably attached to the elongate member **1083**. The accessory attach-

ment insert **1085** may include a first insert finger **1086** having a first laterally extending ridge **1087**. The first insert finger **1086** may be removably disposed in the longitudinal slot **1084**. The accessory attachment insert **1085** further includes an insert body **1088** connected to the insert finger **1086**. The insert finger **1086** may be flexible relative to the insert body **1088**. The accessory attachment insert **1085** may further include a second insert finger **1089** connected to the insert body **1088** and spaced apart from the first insert finger **1086**. The second insert finger **1089** may include a second laterally extending ridge **1090**. The first and second insert fingers **1086**, **1089** may be flexed inward toward each other to remove the accessory attachment insert **1085** from the elongate member **1083**. In many embodiments, the laterally extending ridges **1087**, **1090** may be tapered such that the accessory attachment insert **1085** may be forced onto the elongate member **1083** to insert the fingers **1086**, **1089** without flexing them toward each other.

[0226] With reference to FIGS. **111-114**, the first insert finger **1086** may include both the first laterally extending ridge **1087** and the second laterally extending ridge **1090**. The second laterally extending ridge **1090** may be disposed on the first insert finger **1086** opposite the first laterally extending ridge **1087**. In such embodiments, the accessory attachment insert **1085** may be rotated to lock the accessory attachment insert to the elongate member **1083** by occupying the T-shaped cross section of the longitudinal slot **1084** with the laterally extending ridges **1086**, **1090**. Similarly, the accessory attachment insert **1085** may be rotated to unlock the accessory attachment insert from the elongate member **1083**. The accessory attachment insert **1085** may further include a lock lever **1091** connected to the insert body **1088**. The lock lever **1091** may include a catch **1092** configured to engage the elongate member **1083** to prevent rotation of the accessory attachment insert **1085**. The lock lever **1091** may be flexible relative to the insert body **1088** such that the lock lever may be flexed away from the elongate member **1083** to allow rotation of the accessory attachment insert **1085**. To remove the accessory attachment insert **1085** from the elongate member **1083**, a user may manually flex the lock lever **1091** away from the elongate member. To install the accessory attachment insert **1085** on the elongate member **1083**, the rigidity of the elongate member relative to the flexible lock lever **1091** may force the lock lever out of the elongate member's way while the user rotates the accessory attachment insert. In such embodiments, the catch **1092** may be tapered to allow for smooth flexing in one rotational direction of the accessory attachment insert **1085** but not in the opposite rotational direction.

[0227] Although the invention has been described in detail with reference to certain preferred embodiments, variations and modifications exist within the scope and spirit of one or more independent aspects of the invention as described.

[0228] It should be understood that the figures illustrate the exemplary embodiments in detail, and it should be understood that the present application is not limited to the details or methodology set forth in the description or illustrated in the figures. It should also be understood that the terminology is for description purposes only and should not be regarded as limiting.

[0229] Further modifications and alternative embodiments of various aspects of the invention will be apparent to those skilled in the art in view of this description. Accordingly, this description is to be construed as illustrative only. The construction and arrangements, shown in the various exemplary embodiments, are illustrative only. Although only a few embodiments have been described in detail in this disclosure, many modifications are possible (e.g., variations in sizes, dimensions, structures, shapes and proportions of the various elements, values of parameters, mounting arrangements, use of materials, colors, orientations, etc.) without materially departing from the novel teachings and advantages of the subject matter described herein. Some elements shown as integrally formed may be constructed of multiple parts or elements, the position of elements may be reversed or otherwise varied, and the nature or number of discrete elements or positions may be altered or varied. The order or sequence of any process, logical algorithm, or method steps may be varied or re-sequenced according to alternative embodiments. Other substitutions, modifications, changes and omissions may also be made in the design, operating conditions and arrangement of the various exemplary embodiments without departing from the scope of the present invention.

[0230] Unless otherwise expressly stated, it is in no way intended that any method set forth herein be construed as requiring that its steps be performed in a specific order. Accordingly, where a method claim does not actually recite an order to be followed by its steps or it is not otherwise specifically stated in the claims or descriptions that the steps are to be limited to a specific order, it is in no way intended that any particular order be inferred. In addition, as used herein, the article "a" is intended to include one or more component or element, and is not intended to be construed as meaning only one. As used herein, "rigidly coupled" refers to two components being coupled in a manner such that the components move together in a fixed positional relationship when acted upon by a force.

[0231] Various embodiments of the invention relate to any combination of any of the features, and any such combination of features may be claimed in this or future applications. Any of the features, elements or components of any of the exemplary embodiments discussed above may be utilized alone or in combination with any of the features, elements or components of any of the other embodiments discussed above.

What is claimed is:

1. A storage container comprising:

a first mounting rail and a second mounting rail spaced apart from the first mounting rail; and

a mount detachably connected to the first mounting rail and the second mounting rail, the mount including at least one cleat receptacle defined therein.

2. The storage container of claim **1**, wherein the first mounting rail and the second mounting rail are disposed at respective corners of the storage container.

3. The storage container of claim **2**, wherein the mount spans across an entire side of the storage container.

4. The storage container of claim **1**, wherein:

the mount includes a first mount end and a second mount end; and

at least one of the first and second mount end includes a closure latch.

5. The storage container of claim **1**, wherein the mount is configured to resiliently snap on and off of the respective first and second mounting rails.

6. The storage container of claim 1, further comprising:
a cleat slidably received in the cleat receptacle; and
an attachment accessory connected to the cleat.

7. The storage container of claim 1, wherein:
the mount includes a rigid plate member; and
the at least one cleat receptacle is defined in the rigid plate member.

8. A modular attachment plate comprising:
a plate body;
at least one cleat receptacle opening defined in the plate body; and
a latch receptacle opening defined in the plate body.

9. The modular attachment plate of claim 8, further comprising:
a storage container connected to the modular attachment plate, the storage container including a recess disposed adjacent the at least one cleat receptacle opening of the modular attachment plate.

10. The modular attachment plate of claim 8, further comprising:
a storage container including a flexible material, the flexible material of the storage container connected to the plate body of the modular attachment plate; and
wherein the flexible material flexes away from the at least one cleat receptacle opening to form a recess.

11. The modular attachment plate of claim 10, wherein the storage container includes a backpack having at least one carrying strap.

12. A collapsible storage crate comprising:
a crate bottom having a crate exterior surface; and
at least one cleat connected to the crate exterior surface of the crate bottom, the at least one cleat configured to removably attach the crate to a corresponding cleat receptacle.

13. The collapsible storage crate of claim 12, wherein the cleat is inserted in the cleat receptacle and the crate is translated relative to the cleat receptacle, thereby locking the cleat in the cleat receptacle.

14. The collapsible storage crate of claim 13, further comprising a latch connected to the crate bottom and inserted in a corresponding latch receptacle.

15. The collapsible storage crate of claim 14, wherein the cleat receptacle and the latch receptacle are defined in a lid of a tool box.

16. The collapsible storage crate of claim 12, further comprising:
a crate sidewall connected to the crate bottom; and
at least one cleat receptacle defined in the crate sidewall.

17. The collapsible storage crate of claim 16, wherein:
the crate sidewall includes a crate interior side; and
the at least one cleat receptacle is defined in the crate sidewall on the crate interior side.

18. The collapsible storage crate of claim 17, wherein, in a collapsed mode, the at least one cleat receptacle is facing a first direction and the at least one cleat is facing a second direction opposite the first direction.

19. The collapsible storage crate of claim 18, further comprising a second collapsible storage crate having second at least one cleat received in the at least one cleat receptacle of the collapsible storage crate when the collapsible storage crate is in the collapsed mode.

20. The collapsible storage crate of claim 19, wherein the second collapsible storage crate is also in a collapsed mode.

21. The collapsible storage crate of claim 16, wherein the at least one cleat receptacle is a through hole in the crate sidewall.

22. The collapsible storage crate of claim 21, wherein:
the crate sidewall includes a sidewall top section and a sidewall bottom section;
a first cleat receptacle of the at least one cleat receptacle is defined as a through hole in the sidewall top section;
a second cleat receptacle of the at least one cleat receptacle is defined as a through hole in the sidewall bottom section; and
the first cleat receptacle and the second cleat receptacle align when the collapsible storage crate is in a collapsed mode.

23. The collapsible storage crate of claim 16, wherein:
the crate sidewall includes a sidewall exterior side; and
the at least one cleat receptacle is defined in the crate sidewall on the sidewall exterior side.

* * * * *