United States Patent [19]

Richards et al.

[11] **3,875,030**

[45] **Apr. 1, 1975**

[54] **DETECTION OF GROUNDED ANODES**

[75] Inventors: **Nolan Earle Richards**, Florence, Ala.; **James Simmons Berry, Jr.**, Savannah, Tenn.

[73] Assignee: **Reynolds Metals Company**, Richmond, Va.

[22] Filed: **Sept. 17, 1973**

[21] Appl. No.: **398,286**

[52] **U.S. Cl.** **204/67**, 204/228

[51] **Int. Cl.** **C22d 3/12**, B01k 3/00

[58] **Field of Search** 204/67, 228

[56] **References Cited**

UNITED STATES PATENTS

3,345,273	10/1967	Brown	204/67 X
3,674,674	7/1972	Arts et al.	204/228 X
3,761,379	9/1973	Elliot	204/228 X

FOREIGN PATENTS OR APPLICATIONS

188,678	3/1967	U.S.S.R.	204/67

Primary Examiner—John H. Mack
Assistant Examiner—D. R. Valentine
Attorney, Agent, or Firm—Glenn, Palmer, Lyne & Gibbs

[57] **ABSTRACT**

In a multiple anode alumina reduction cell, gas bubbles are formed on the bottom of each anode block during the reduction process and rise to the surface of the molten cryolite. The formation and subsequent release of bubbles causes variations in current flowing through the anode block. When an anode block is grounded, the rate at which gas bubbles are produced is significantly less, for a given anode block current, than when the anode block is not grounded. Apparatus is provided to sense current in the anode block and, from analysis of the variation in that current determines the presence of a ground or electronic path. The measured current varies as a result of factors other than the gas bubbles so that the measurement signal is filtered to obtain a signal whose frequency of amplitude variation is in the range of interest. A comparator compares the magnitude of the frequency signal with a reference to eliminate variations due to noise, and the comparator produces digital pulses that are fed to a first counter. The measurement signal is also fed to a voltage-to-frequency converter and the output of the converter drives a second counter. The counts in the two counters are compared and the resulting signal indicates whether or not a grounded anode condition exists. A data processor automatically controls plural pot lines each having plural cells so that the measurements are taken automatically. An addressable multiplexer is provided for each cell so that only one ground detector is required for each pot line.

14 Claims, 9 Drawing Figures

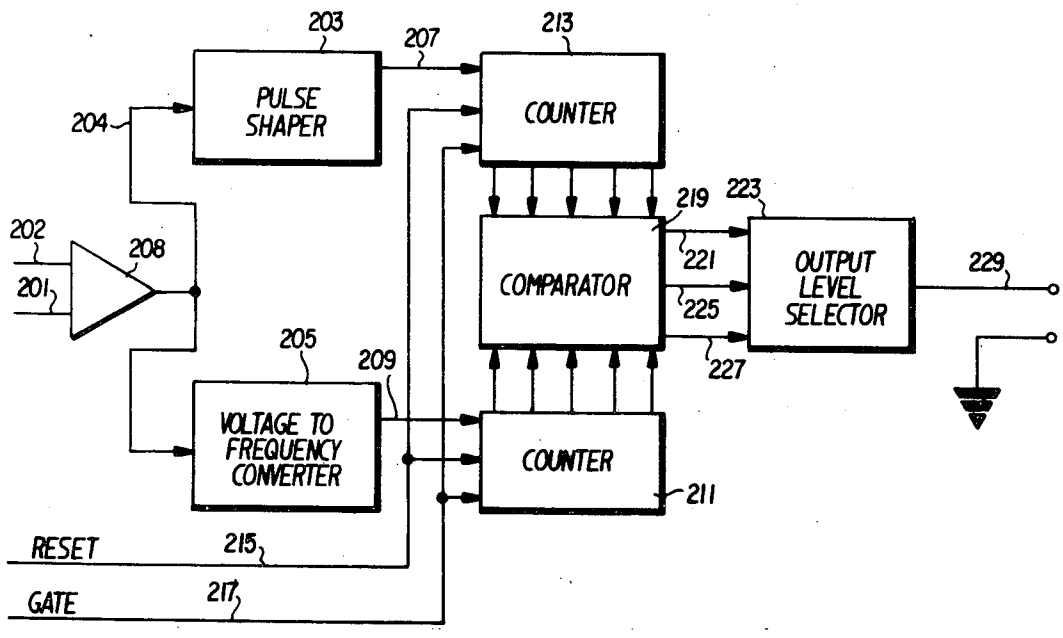

FIG.1

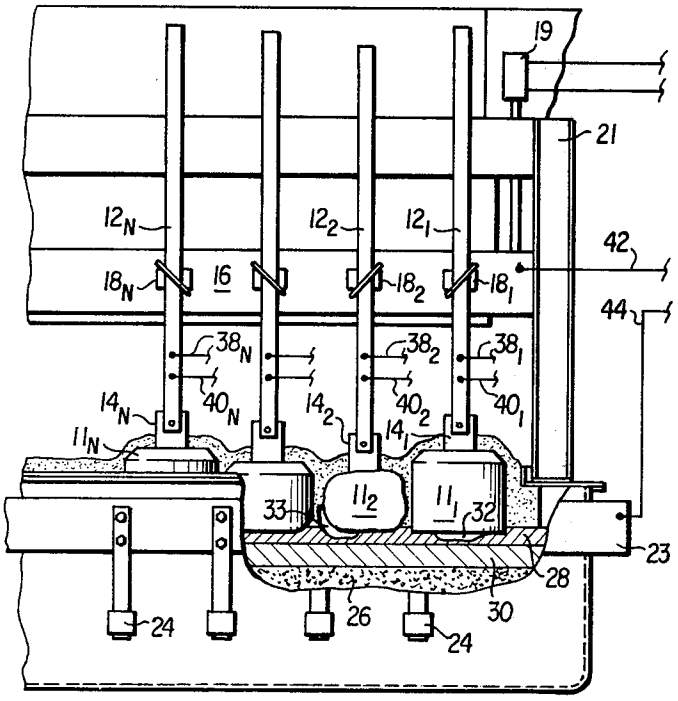
19
21
12_N
12_2
12_1
42
18_N
16
18_2
18_1
44
38_N
38_2
38_1
40_N
40_2
40_1
14_N
14_2
14_1
11_N
33
11_2
11_1
32
23
28
30
24
26
24

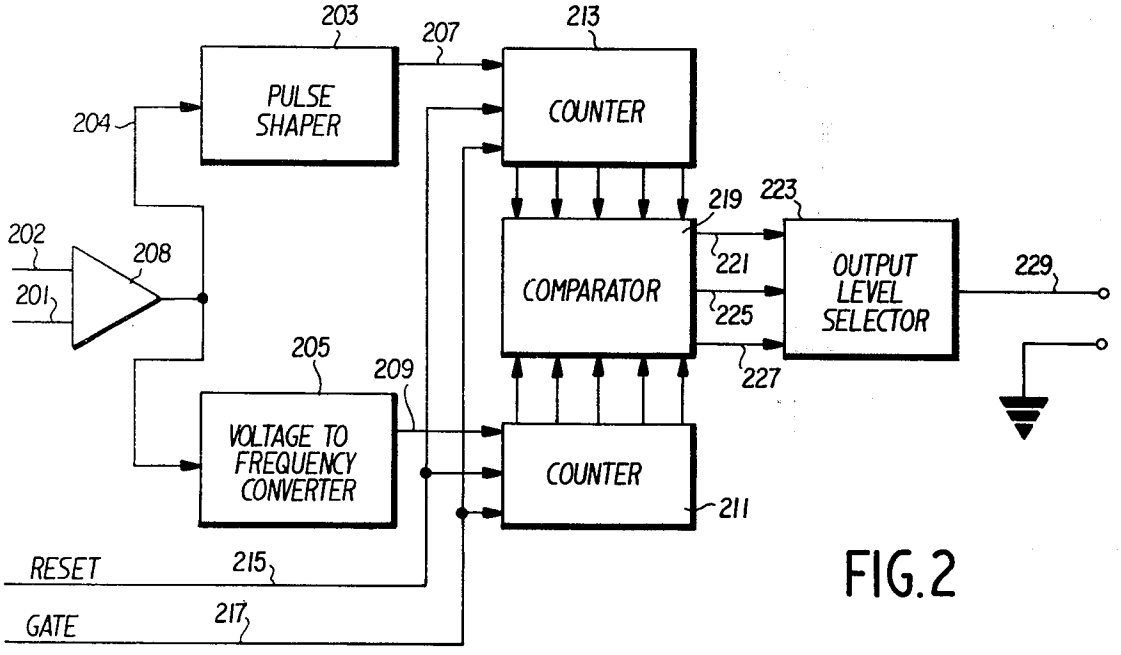
203
207
213
PULSE SHAPER
COUNTER
204
202
208
201
219
223
221
COMPARATOR
OUTPUT LEVEL SELECTOR
229
225
227
205
209
VOLTAGE TO FREQUENCY CONVERTER
COUNTER
211
RESET
215
GATE
217

FIG.2

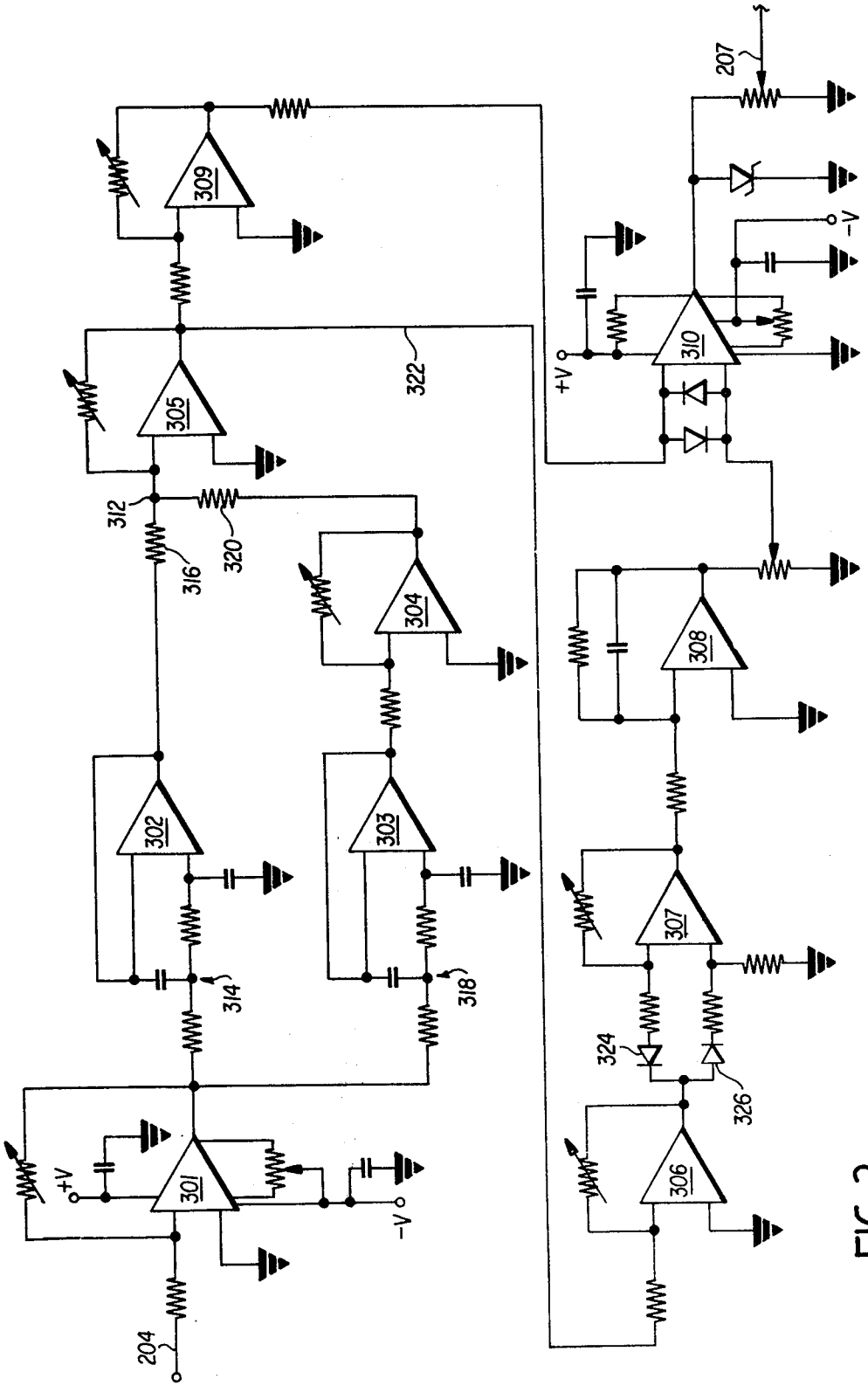
301
302
303
304
305
306
307
308
309
310
312
314
316
318
320
322
324
326
204
207
+V
-V

FIG. 3

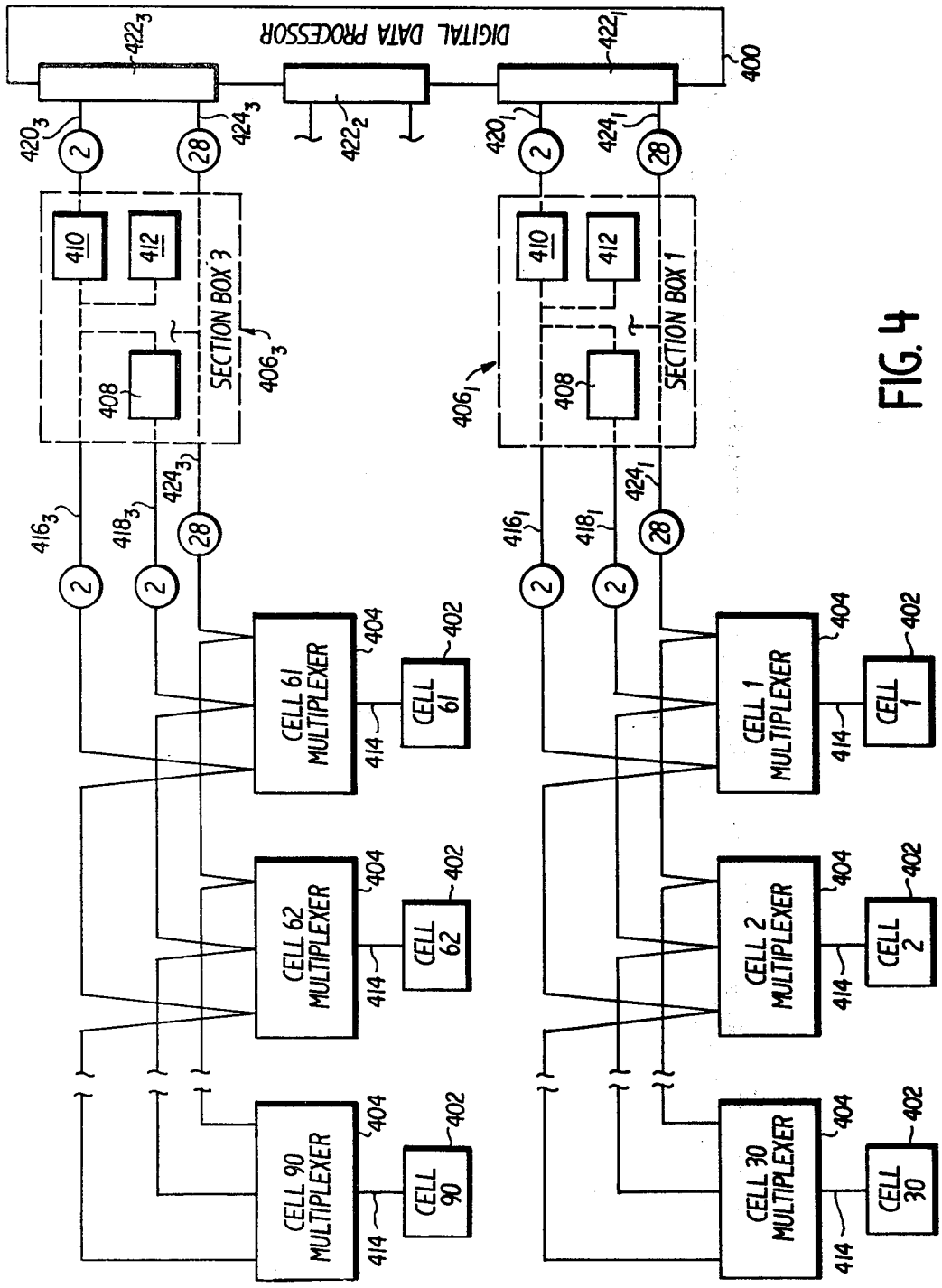
DIGITAL DATA PROCESSOR
400
422_3
422_2
422_1
420_3
424_3
420_1
424_1
2
28
410
412
408
SECTION BOX 3
406_3
SECTION BOX 1
406_1
416_3
418_3
424_3
416_1
418_1
424_1
CELL 61 MULTIPLEXER
CELL 62 MULTIPLEXER
CELL 90 MULTIPLEXER
CELL 1 MULTIPLEXER
CELL 2 MULTIPLEXER
CELL 30 MULTIPLEXER
404
402
414
CELL 61
CELL 62
CELL 90
CELL 1
CELL 2
CELL 30

FIG. 4

FIG. 5

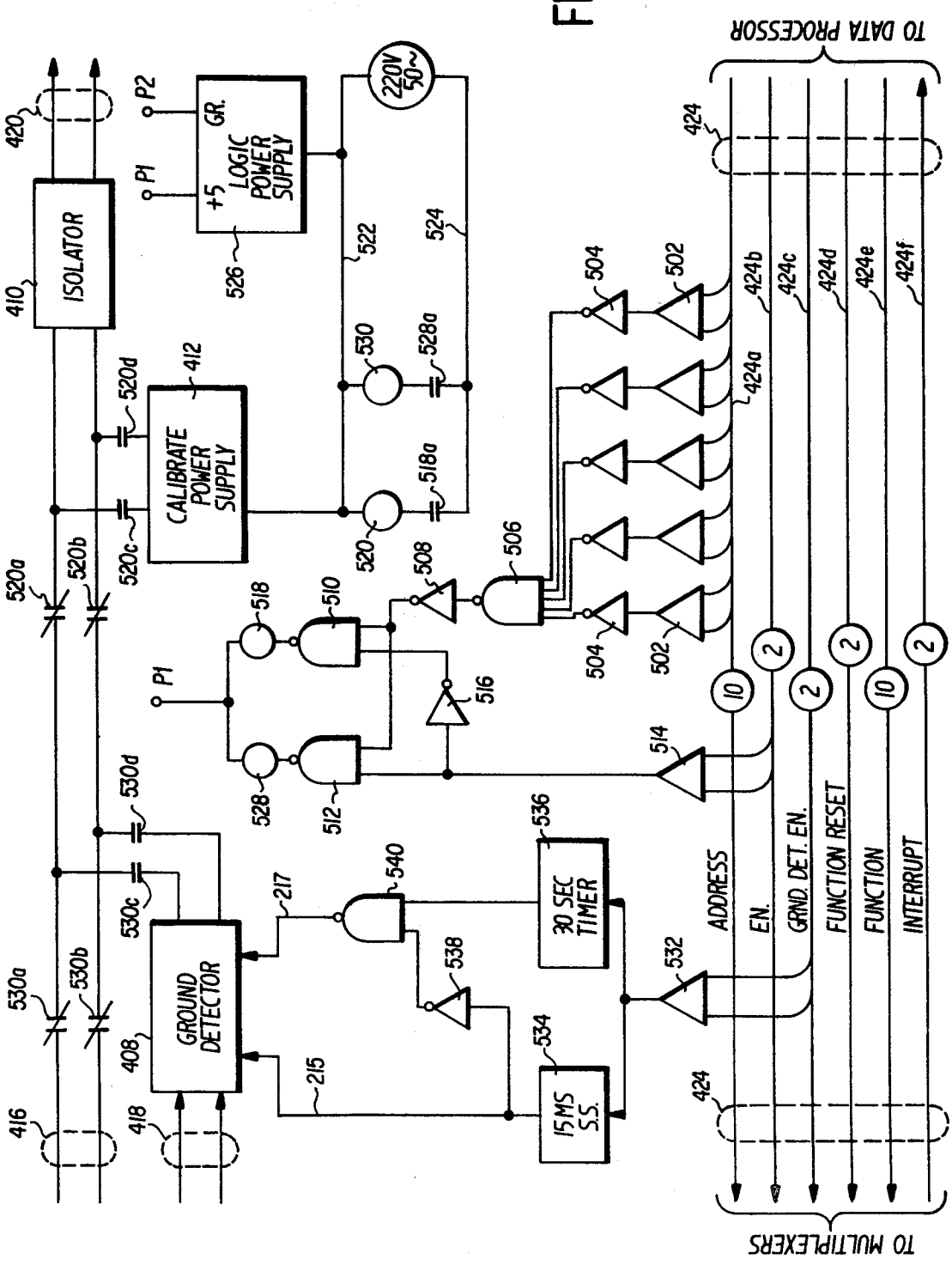
TO DATA PROCESSOR
TO MULTIPLEXERS
ISOLATOR
LOGIC POWER SUPPLY
CALIBRATE POWER SUPPLY
GROUND DETECTOR
30 SEC TIMER
15MS S.S.
220V 50~
+5
GR.
P1
P2
ADDRESS
EN.
GRND. DET. EN.
FUNCTION RESET
FUNCTION
INTERRUPT
410
412
408
416
418
420
424
424a
424b
424c
424d
424e
424f
502
504
506
508
510
512
514
516
518
518a
520
520a
520b
520c
520d
522
524
526
528
528a
530
530a
530b
530c
530d
532
534
536
538
540
217
215
10
2

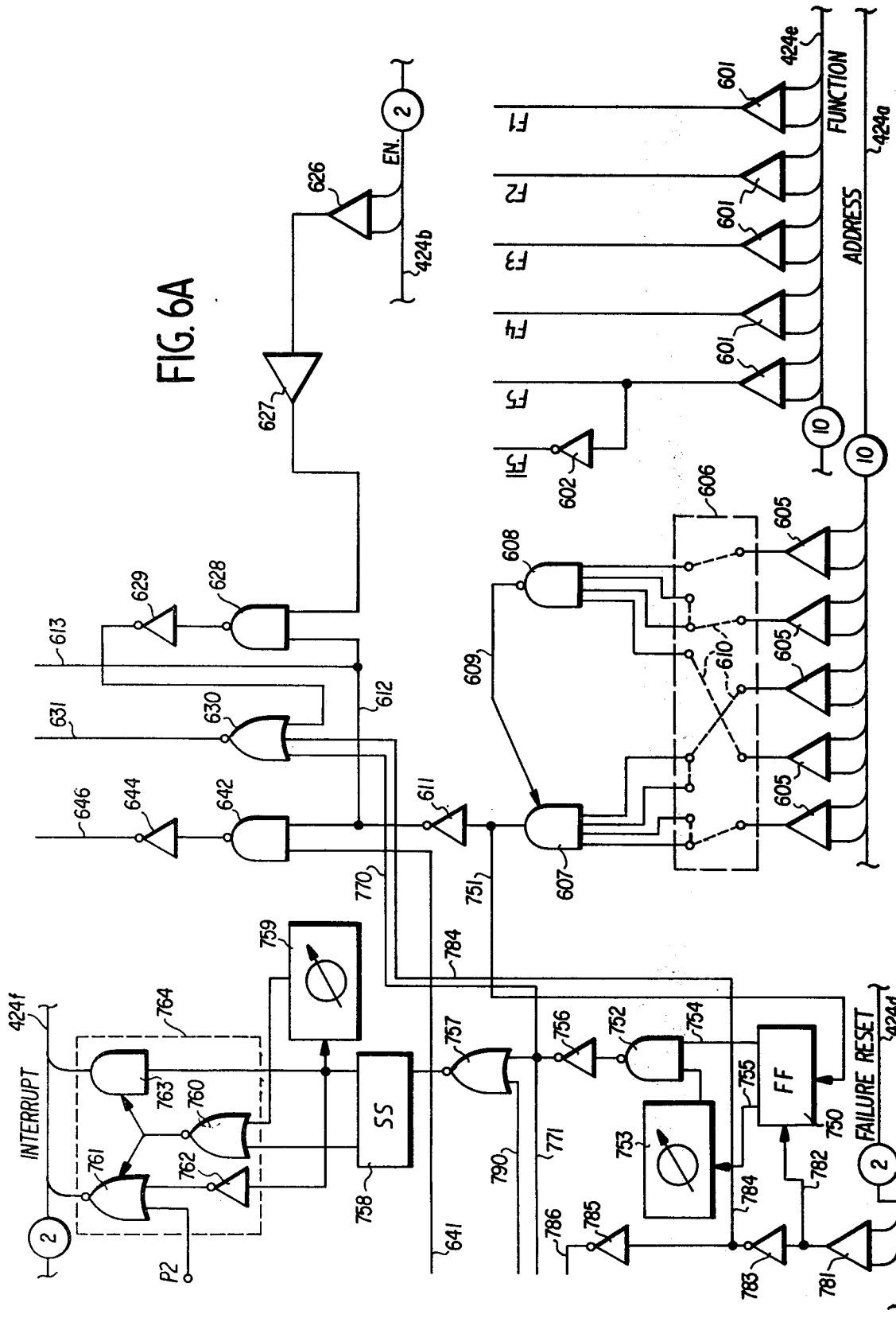
INTERRUPT
FAILURE RESET
FUNCTION
ADDRESS
SS
FF
EN.
P2
F1
F2
F3
F4
F5
F5
424a
424b
424d
424e
424f
601
602
605
606
607
608
609
610
611
612
613
626
627
628
629
630
631
641
642
644
646
750
751
752
753
754
755
756
757
758
759
760
761
762
763
764
770
771
781
782
783
784
785
786
790

FIG. 6A

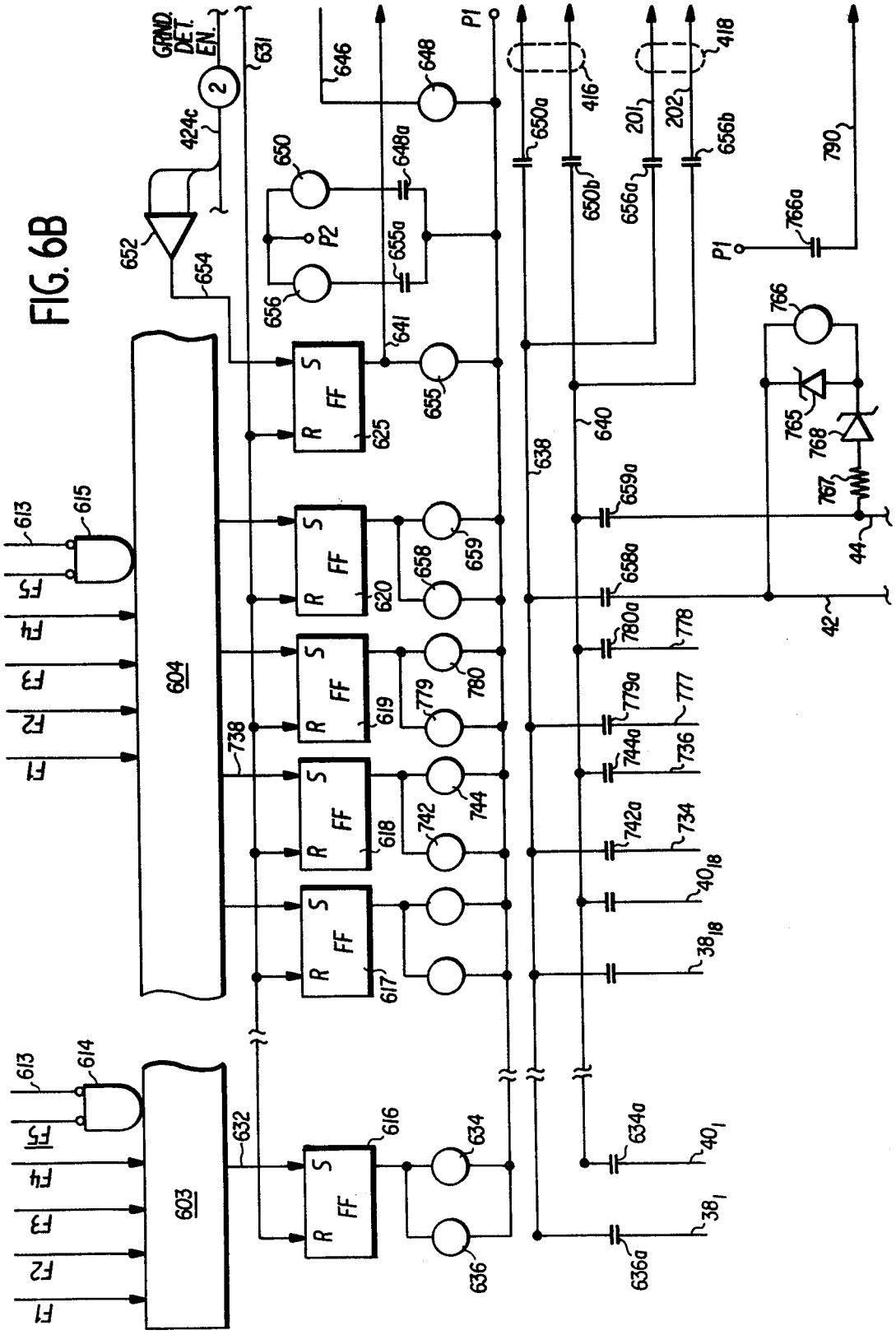
GRND. DET. EN.
2
424c
631
646
648
P1
650
P2
648a
655a
656
652
654
641
655
625
FF
R
S
650a
650b
416
201
202
656a
656b
418
790
766a
766
765
768
767
44
42
640
638
659a
658a
780a
778
779a
777
744a
736
742a
734
40_{18}
38_{18}
634a
40_1
38_1
636a
613
615
F5
F4
F3
F2
F1
604
620
658
659
619
779
780
738
618
742
744
617
614
603
632
616
634
636

FIG. 6B

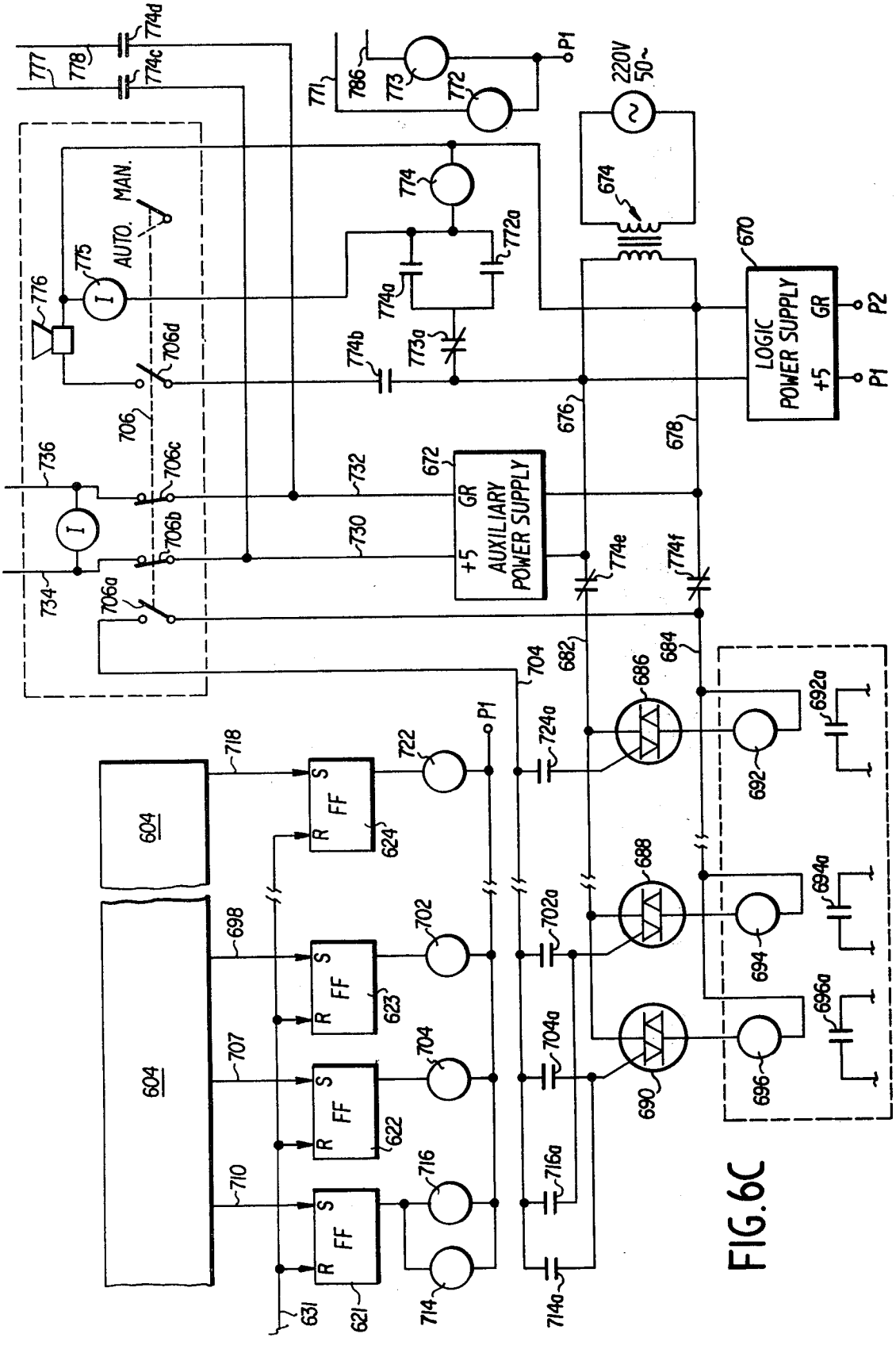
AUTO.
MAN.
LOGIC POWER SUPPLY
+5
GR
AUXILIARY POWER SUPPLY
220V 50~
FF
604

FIG.6C

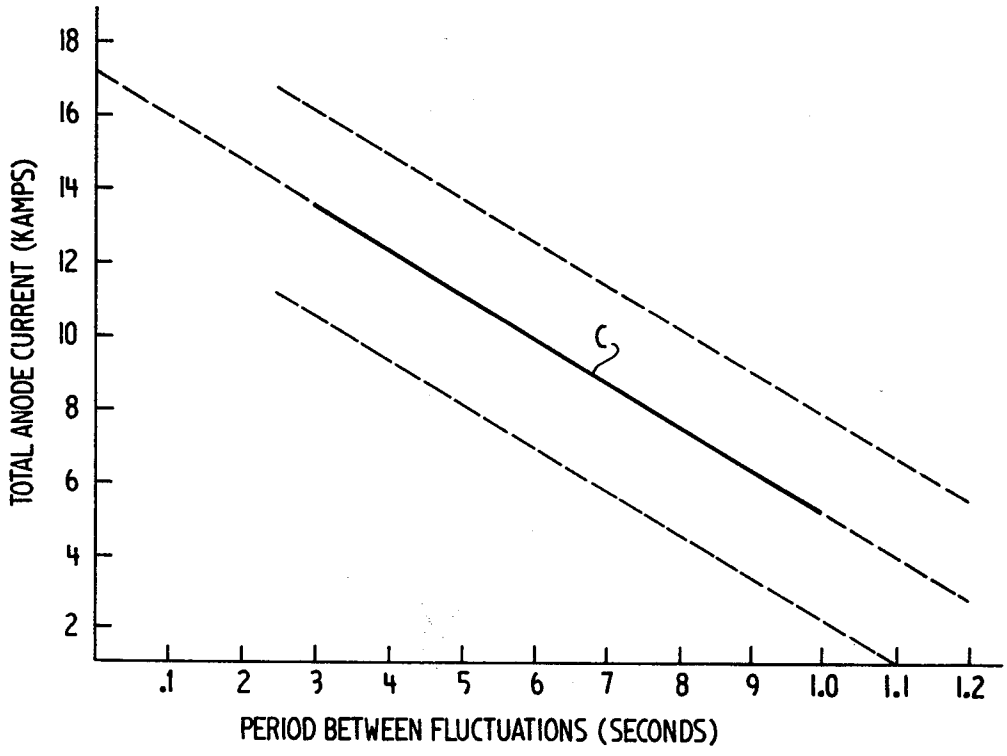
TOTAL ANODE CURRENT (KAMPS)
18
16
14
12
10
8
6
4
2
.1
2
3
4
5
6
7
8
9
1.0
1.1
1.2
PERIOD BETWEEN FLUCTUATIONS (SECONDS)
C

FIG.7

DETECTION OF GROUNDED ANODES

BACKGROUND OF THE INVENTION

This invention relates to a method of, and apparatus for, detecting conditions of significant anode maladjustment of interelectrode distance in an alumina reduction cell. More particularly, the present invention provides a method of, and apparatus for, automatically detecting a grounded anode, or maladjustment of an anode in a multiple anode alumina reduction cell.

In U.S. Pat. No. 3,345,273 issued to Robert V. Brown, there is disclosed a method and apparatus for indicating anode position. The method disclosed in that patent is based on the discovery that the voltage wave form across a multiple block anode alumina reduction cell comprises a substantial direct current wave, with a random low frequency alternating current wave of a fluctuating amplitude superimposed thereon. The amplitude of the superimposed wave varies as a function of the degree of overloading of one or more carbon anodes in the cell. When one or more of the anodes is closer to the molten aluminum layer than the majority of the anodes in the cell, the amplitude variations of the superimposed alternating current are of magnitudes sufficient to be detected and indicated on a suitable meter. When all of the anodes are in proper relationship to the molten aluminum layer, the alternating current signal is comparatively small and the reading on the meter is proportionately lower. This variation in amplitude of the alternating current signal may be used to accurately indicate when the anodes of a cell should be adjusted. However, this method merely provides an indication that at least one of the individual anodes of a cell should be adjusted, but provides no indication as to which particular anode or anodes require the adjustment.

During the electro-chemical reduction of alumina, the carbon anodes of the reduction cell are consumed by a process that produces carbon dioxide gas. This gas is released as bubbles from the lower surfaces of the carbon anodes. The present invention is based on the discovery that for a given electrolyte composition and hydrostatic pressure (anode emersion) the bubbles progress in size from the minimum for nucleation to a fairly narrow range of sizes (volume) at which time the bubbles overcome hydrostatic pressure and there is a rapid movement of the bubble from underneath the surface of the anode toward the atmosphere at the top of the cell. The number of bubbles is thus proportional to the rate of production of aluminum or the anode current density on the lower surface of the anode.

The growth and release of bubbles causes increases and decreases in the contact area between the electrolyte and the anode block, hence the current through each anode block fluctuates between a maxima and a minima at a rate dependent upon the rate of gas evolution at the anode block. It has been found that when an individual carbon anode is grounded, there is a significant reduction in the rate in which gas is produced at that anode block. Consequently, fewer gas bubbles are formed and released and there are fewer fluctuations of the anode current. The basic reason for this is that with the carbon anode grounded a portion of the total current flowing through the individual anode conductively flows directly into the molten aluminum and thus does not aid in the reduction process. This wasted current

represents a large economic loss and, as explained in the aforementioned patent, may lead to an additional current flow through the individual anode which overheats the metal stub holding the carbon block, thus melting the stub and allowing the carbon block to be disconnected from the anode rod. Even though conditions may be such that a grounded anode with an electronic path in parallel with the electrolytic path may carry more than its proportionate share of the line current, this is not always so. A grounded anode may actually carry less than the average current. Therefore measurement of the magnitude of anode current alone cannot provide the basis for determining a grounded anode condition.

SUMMARY OF THE INVENTION

An object of the present invention is to provide a novel method and apparatus for detecting a grounded or maladjusted anode in a reduction cell.

An object of the present invention is to provide a method of detecting a grounded or maladjusted anode comprising the steps of: measuring the total current through the anode over an interval of time and generating a reference value corresponding to the number of current fluctuations that should result from the formation and release of gas bubbles at the anode during the interval the current is measured; deriving from the measured current a second value corresponding approximately to the number of current fluctuations that actually occur during the measuring interval, and comparing the reference value to the second value.

An object of the present invention is to provide a method as set forth in the preceding paragraph wherein a fluctuating voltage proportional to the total current is produced, the voltage converted to a sequence of pulses, and the pulses counted to produce the reference value; and wherein the voltage is filtered to eliminate fluctuations at frequencies outside the range at which fluctuations occur as a result of the formation and release of the gas bubbles to thereby produce a second sequence of pulses, and said second sequence of pulses is counted over said time interval to derive the second value, a grounded anode being present if the comparison step indicates that the reference value is greater than the second value.

A further object of the invention is to provide apparatus for automatically performing the steps of the method set forth above.

In accordance with one aspect of the invention, apparatus for detecting a grounded or maladjusted anode comprises means for producing a fluctuating voltage corresponding to total current flow through the anode voltage to frequency converter means for converting the voltage to a first sequence of pulses having a frequency proportional to the rate at which gas bubbles should be formed and released at the anode when the anode is not grounded or maladjusted and the measured current flows therethrough, pulse shaper means responsive to the voltage for producing a second sequence of pulses wherein each pulse corresponds to the formation and release of a gas bubble at the anode counter means for counting the sequences of pulses and comparison means for comparing the counts in the two counters and producing a signal indicating whether the anode is grounded or not properly adjusted.

Yet another object of the invention is to provide an apparatus as described above wherein the pulse shape

includes filter means for filtering from said voltage fluctuations occurring at a rate outside the range of rates at which the gas bubbles might be produced, rectifier means responsive to the filtered voltage, and comparator means responsive to the filter means and the rectifier means for producing the pulses in the second sequence of pulses.

Other objects of the invention and its mode of operation will become apparent upon consideration of the following description and the accompanying drawing.

BRIEF DESCRIPTION OF DRAWING

FIG. 1 is a side view, partly in section, showing a prior art multiple anode alumina reduction cell;

FIG. 2 is a block diagram of a circuit for detecting a grounded or maladjusted anode;

FIG. 3 is a schematic wiring diagram of a pulse shaper such as that used in FIG. 2;

FIG. 4 is a block diagram of a data processor and multiplexer system for controlling a plurality of pot lines;

FIG. 5 is a logic diagram of the circuits employed in the section box associated with one pot line;

FIGS. 6A–6C are logic diagrams showing the circuits of a multiplexer for controlling one reduction cell; and,

FIG. 7 is a graph showing the relationship between anode current and fluctuations in anode voltage for a typical adjusted cell.

DESCRIPTION OF A PREFERRED EMBODIMENT

THE REDUCTION CELL

For purposes of illustrating the invention, FIG. 1 shows a prior art alumina reduction cell of a type known by various names such as "prebake," "Niagara," etc. However, it will become clear from the following description that the present invention is not limited in use to cells of the type illustrated in FIG. 1. As shown in FIG. 1, the cell includes a plurality, i.e., N carbon block anodes 11 each connected to a copper anode rod or stem 12 by means of a metal stub 14 cast in the carbon anode block. Each rod 12 is clamped to an anode bus 16 by means of a hand-operated clamp 18. The clamps permit an operator, with the aid of a conventional hand jack generally used in the industry, to raise or lower one anode block 11 relative to the others. A motor driven bridge jack 19, attached to a cell frame 21, drives the anode bus 12 so that all of the anode blocks maybe raised or lowered in unison.

A low voltage, high current source (not shown) has its positive side connected to the anode bus 16 and its negative side connected to a cathode bus 23. The cathode bus is connected by means of current collectors 24 to a carbon cathode 26. During operation of the cell each carbon block 11 is maintained with its lower surface in contact with a layer of molten cryolite 28. As the reduction process takes place, a layer of molten aluminum 30 forms adjacent the cathode 26 while oxygen combines with the carbon blocks 11 to form gas bubbles (oxides of carbon) at the lower faces of the carbon blocks. FIG. 1 shows one gas bubble 32 as it is being formed at the lower face of the right-most carbon block 11_1. Depending upon the hydrostatic pressure at the lower face of each carbon block, the bubbles build up to a certain size (with limits) before they escape around the carbon blocks to the upper surface of the cell. A gas bubble 33 is shown as it is released from the lower surface of a carbon block and begins movement into the atmosphere above the cell. In the following description a carbon block 11 is referred to simply as an anode.

Each anode stem 12 has an anode current measuring means connected thereto for deriving a voltage proportional to the current flowing through the stem. This current measuring means comprises two electrical leads 38 and 40 connected at separate points along the stem. Because of the electrical resistance of the anode stem to current flowing therethrough, a voltage differential, sometimes referred to as the stem voltage, exists between the two points on the stem and this voltage appears on the leads 38 and 40. This method of measuring anode current flow is well known in the art.

It has been found that as long as a particular anode 11 is properly adjusted, then for a given current through anode, gas bubbles 32 are formed and released at a fairly constant rate. As each bubble increases in size it decreases the area of contact between the lower surface of the anode 11 and the layer of molten cryolite 28. This in effect causes a gradual increase in the anode resistance and results in a corresponding decrease in current through the anode. As each bubble is released, the area of contact between the anode and the cryolite again increases with the result that the current through the anode again increases. Thus, during normal cell operation the stem voltage appearing across leads 38 and 40 is a DC voltage that fluctuates slowly in a generally sinusoidal fashion at a frequency corresponding to the frequency at which bubbles are formed and released at the anode.

When an anode 11 is grounded to the layer of molten aluminum 30, or is maladjusted to such an extent that it is incipiently grounded, a conductive current path is established from anode bus 16, through anode stem 12, anode 11, aluminum layer 30, and current conductors 24, to the cathode bus 23. This conductive current is wasted and contributes nothing to the reduction process. Since the conductive current does not contribute to the reduction process, fewer gas bubbles 32 are formed at the anode 11 for a given current through the anode. As a result, for a given anode current, the stem voltage across leads 38 and 40 fluctuates at a lower frequency when the anode is grounded or maladjusted than when it is in normal operating condition.

From the above description it is seen that the presence of a grounded anode, an incipiently grounded anode, or an anode in need of vertical adjustment with respect to the liquid cathode, may be detected by a method including the steps of determining the frequency of the voltage fluctuations appearing across leads 38 and 40 and comparing this frequency with what the normal frequency of the fluctuations should be for the amount of current flowing through the anode. When the anode is grounded or is vertically maladjusted so that there is an electronic conduction path from the anode to the liquid cathode, the frequency is significantly less for a given current flow than for normal or ungrounded anode operation with the same current flow.

Since the frequency of fluctuations for a given current flow through an anode is dependent on the particular cell, it is necessary to establish the normal relationship between electrolytic current flow and the frequency of the fluctuations resulting from gas bubble release. This is accomplished by properly adjusting the anodes of a cell, varying the current through the an-

odes, and plotting a graph of total (individual) anode currents against the frequency or period between fluctuations.

FIG. 7 is a graph of total anode current versus the period between fluctuations due to gas bubble release for an anode of a typical cell. The graph is obtained by applying anode stem voltages, one at a time to a conventional X-Y plotter and recording the fluctuations as a function of time. By visual analysis, i.e., by counting the peaks of the generally sinusoidal trace over an interval of time, the period betweeen fluctuations for that particular anode current is determined. This fixes one point on the graph of FIG. 7. The anode current is then changed and the process repeated to determine another point on the graph. To obtain the graph of FIG. 7, the anode current was varied in steps between about 13,750 amps and 5,500 amps and a point on the graph establishd for each step. The data of the graph of FIG. 7 was obtained over a five day period with measurements being made each day on from two to 12 anodes in an 18 anode cell. However, the measurements need not be made over such a long interval of time.

It will be understood that because of various factors occurring during the measurement, and the error inherent in measurements of the type described above, all of the computed points on the graph of FIG. 7 do not fall on a straight line. Thus, the line C represents the curve of best fit for the points plotted. All of the measurements resulted in plotting points falling within the 95 percent confidence limits represented by the dashed lines of FIG. 7. With the method described above, it was found that the period for a given anode current was reproducible within ±0.03 seconds.

The normal relationship between electrolytic current flowing through an anode, and the period between fluctions is represented by the equation

$$I_E = Y - dy/dx.T$$

where I_E is the electrolytic current flowing through the cell, Y is the intercept obtained by extrapolating the curve C of FIG. 7, dy/dx is the slope of the curve C, and T is the time in seconds between fluctuations. Having once established this normal relationship for a properly adjusted cell, measurements may later be made while the cell is in operation to determine which, if any, of its anodes are grounded or improperly adjusted.

TYPICAL EXAMPLES

The following examples illustrate how the above-described method may be used for the analysis of anode adjustment. All examples are for a reduction furnace having **18** prebaked anodes. Example I. A manual analysis was made by recording anode stem voltages proportional to current for an interval of 30 to 40 seconds. From analysis of the recordings for all 18 anodes it was established, as explained above with respect to FIG. 7, that the period between successively released gas bubbles should be between 0.4 and 0.6 seconds for an anode carrying 12,000 amps. One anode carrying 12,000 amps showed a periodicity in the sinusoidal waveform of between 1.10 and 1.25 seconds. Partial electronic conduction was suspected. When the anode was removed for inspection it was found to have a projection.

The grounded anode was raised two inches. With the anode current at 7,300 amps the period of bubble release was redetermined and found to be 0.95±0.15 sec. From the normal relationship between current and period established by measurement of all the anode currents, the period should have been 0.86±.12 sec. This indicated that the anode was no longer grounded. A physical check of the anode confirmed that the projection was no longer contacting the metal pad. Example II. In this example, the anode stem voltages were sensed for about 30 seconds each applied to the filter circuit of FIG. **3,** described below, and the filtered signals applied to the X-Y plotter. Determination of the period between fluctuations was made manually by counting the number of fluctuations per unit of time on the recorded trace.

The normal relationship was determined to be $I_E = 14{,}600 - 6150T$.

Upon subsequent measurement it was found that one anode carrying 8,800 amps was releasing gas bubbles every 1.40 seconds. This was three standard deviations from the normal relationship and the anode was diagnosed as grounded. Upon removal for inspector it was found to have a projection into the metal pad. Example III. In this example, the measurements were made as in Example II, but with the differential amplifier **208** (FIG. **2**) connected to the input of the filter circuit.

The normal relationship was determined from readings on **15** anodes to be $I_E = 16{,}000 - 7{,}700T$.

Upon subsequent measurement, one anode carrying 15,200 amps was releasing a gas bubble about every 0.77 second, and one anode carrying 10,700 amps was releasing a gas bubble every 1 second. These points were **3** and **7** standard deviations, respectively, outside the zone of reasonable error in the normal relationship. The anodes were predicted to be grounded. When raised for inspection, the first anode was found to have a white hot projection 6 inches in diameter, and the latter anode was found to have a projection 1.5 inches in diameter. Example IV. By the manual method of Example I, two anodes were determined to be properly adjusted and carrying 11,300 and 8,400 amps. The fluctuations were determined to be occurring at intervals of 0.66 and 1.02 seconds, respectively.

Another measurement was then made at the same anode current levels using the amplifier **208,** filter-shaper **203,** and counter **213** of FIG. **2.** This measurement determined the period between fluctuations for the two anodes to be 0.72 and 1.0 seconds, respectively, thus indicating the operativeness of the electronic apparatus for making the measurements.

GROUND DETECTOR CIRCUITS

While referred to as ground detector circuits, it will be evident that the circuits subsequently described may be employed to detect a grounded anode, an incipiently grounded anode, or, in general an electronic conductive path between an anode and the liquid cathode in a reduction cell. In a Niagara aluminum reduction cell with an anode in need of vertical adjustment, the measured rate of stem voltage leads will vary 0.8 to 1.2 standard deviations from the normal relationship between anode current and voltage fluctuation.

FIG. **2** is a block diagram of a preferred embodiment of an apparatus for detecting grounded anodes in accordance with the method described above. As subsequently explained, the stem voltage signals appearing across leads **38** and **40** are multiplexed so that they are applied one at a time to the input leads **201** and **202** of FIG. **2.** However, for purposes of the present descrip-

tion, assume that the leads 38_1 and 40_1 of FIG. 1 are directly connected to the leds **201** and **202** respectively. Thus, the stem voltage representing current flow through the right-most anode 11_1 (FIG. 1) is applied over leads **201** and **202** to a differential amplifier **208.** The output of amplifier **208** is connected to the inputs of a pulse shaper **203** and a voltage-to-frequency converter **205.**

Pulse shaper **203** is subsequently described in detail but, generally speaking, it filters out noise from the incoming signal and produces an output lead **207** a sequence of pulses with each pulse corresponding to the formation and release of one gas bubble at the right-most anode 11_1. The output pulses from pulse shaper **203** are applied over the lead **207** to a counter **213** which accumulates a count representing the actual number of bubbles released during a given interval.

The voltage-to-frequency converter **205** is designed such that over a given interval of time it produces on an output lead **209** a number of pulses corresponding to the number of gas bubbles which should be formed and released at an anode **11,** if the anode is not grounded. Thus, the conversion ratio may vary depending upon the type of cell being monitored, and should be adjusted accordingly when the ground detector apparatus is first set up. The pulses on lead **209** are applied to a counter **211** to provide a digital standard of bubble count against which the actual bubble count may be compared.

The circuit of FIG. 2 operates as follows. A reset pulse is applied over a lead **215** to reset both the counters **211** and **213.** After termination of the reset pulse a gating pulse is applied to both of the counters over a lead **217.** This pulse may last for a considerable length of time, say 30 seconds, and during this 30 second interval conditions both counters **211** and **213** to receive the pulses applied to them over leads **209** and **207,** respectively. At the end of the 30 second interval the gate pulse on lead **217** is terminated. At this time the counter **211** contains a count corresponding to the number of bubbles which should have been released from underneath the anode 11_1 during the 30 second interval, and the counter **213** contains a count of the number of bubbles actually released during that interval. The outputs from counters **211** and **213** are applied to a digital comparator **219** which compares the two counts and determines whether they are equal or one is greater than the other. If the count in counter **213** is less than the count in counter **211,** comparator **219** produces a signal on lead **221** to condition an output level selector **223.** If the count in counter **211** is equal to or greater than that in counter **213** then the comparator **219** produces a signal on lead **225** or **227,** respectively, to condition the output level selector.

The output level selector **223** comprises a conventional gating means for gating onto an output lead **229** one of three voltage levels, −5V, OV, or +5V, depending upon whether the selector is conditioned by a signal on lead **221, 225** or **227,** respectively.

In the simplest form of the invention, the voltage on lead **229** might be used to visually or audibly signal to an operator the grounded condition of the anode. However, as subsequently explained, the output voltage levels on lead **229** are fed to a data processor which controls a plurality of groups of cells each having a plurality of anodes **11,** and the data processor uses the signals to monitor and control various operations associated with the cell.

Details of the pulse shaper **203** are shown in FIG. **3.** The purpose of the pulse shaper is to filter out of the signal representing anode current all of those fluctuations falling outside of the range at which fluctuations occur, resulting from the formation and release of gas bubbles. The particular rate of bubble formation and release varies according to the type of cell, anode current, etc, but the rate is generally on the order of 0.3–5.0 bubbles per second. Fluctuations above or below the frequency of interest may result from electrical motors and other electrical apparatus found in the vicinity of the cell.

The pulse shaper comprises integrated circuits **301** through **310.** Circuits **301** through **309** are micro-operational amplifiers, for example Fairchild Type 741C, whereas circuit **310** may be a type 351K analog comparator such as that commercially available from Analog Devices, Inc. For the sake of clarity, the bias voltages and external connections for amplifiers **302** through **309** are not shown but it should be understood that they are the same as those shown for amplifier **301.**

The voltage signal representing anode current is applied over lead **204** to amplifier **301** which functions merely as a scaling amplifier. The output of amplifier **301** is applied to a notch filter means comprising amplifiers **302, 303, 304** and summing junction **312.** More specifically, the output of amplifier **301** is applied to amplifier **302** through a filter circuit, generally indicated at **314,** so that that the output of amplifier **302** includes signals of all frequencies less than the maximum frequency at which bubbles are produced and released. The output of amplifier **302** is applied to the summing junction **312** through a resistor **316.**

The output of amplifier **301** is also connected through a filter circuit, generally designated **318,** to the input of amplifier **303.** The filter circuit **318** is such that the output of amplifier **303** is a signal containing only frequencies less than the minimum frequency at which bubbles are produced and released. The output signal from amplifier **303** is inverted by amplifier **304** and applied to summing junction **312,** so that the input to scaling amplifier **305** is a signal comprising pulses or amplitude variations occurring at frequencies within the range of frequencies at which bubbles are produced and released. These pulses are amplified by amplifier **309** and applied to one input of the comparator **310.** In some cases it is possible to dispense with scaling amplifier **309** and apply the output of amplifier **305** directly to the comparator.

The pulses appearing at the output amplifier **305** are in the mature of half sine waves centered about a zero voltage level. The pulses are also applied over a lead **322** to the amplifier **306** and the output of this amplifier is connected through a pair of diodes **324** and **326** to the amplifier **307.** Amplifiers **306** and **307** together with the diodes **324** and **326** provide full wave rectification and amplification of the output signal from amplifier **305.** The output of amplifier **307** is then applied to amplifier **308** which functions as a slow filter or integrator. As a result, the output of amplifier **308** is a DC signal equal to the average value of the peaks of the pulses produced at the output of amplifier **305.** The output of amplifier **308** is applied to the second input of comparator **310** so that the comparator produces a digital output pulse on lead **207** only for those intervals

of time during which the output pulses from amplifier **305** exceed in magnitude the DC average of the pulses. This has the effect of eliminating noise pulses or pulses of small magnitude which might result from conditions other than the formation and release of gas bubbles at the anode. The shaped pulses on lead **207** are then applied to counter **213** as previously described.

MULTIPLEXER SYSTEM

As previously explained, ground detector circuits such as those shown in FIGS. **2** and **3** might be provided for each anode in each cell in order to monitor operations of the cells and detect grounded anodes. However, in a typical reduction plant there may be, for example, three pot lines each comprising 30 pots or cells, with each cell having 18 carbon anode blocks. This means that for the entire system 1620 circuits like those shown in FIGS. **2** and **3** would be required. In accordance with one aspect of the invention, multiplexing means are provided for selectively connecting the voltages read at the anode stems **12** to a ground detector so that one ground detector may perform the detection function for all of the anodes in all of the cells of one pot line. Thus, for the assumed system configuration only **3**, rather than 1620 ground detector circuits would be required. The invention in its application is not limited to a system having the specific number of pot lines, cells per pot line, or anode blocks per cell, as assumed, but may be used in a system having more or fewer of any or all of these elements.

FIG. **4** is a block diagram of the multiplexer system. A digital data processor **400** controls 3 pot lines (only two of which are shown) with each pot line including **30** pots or alumina reduction cells **402.** A cell multiplexer **404** is provided for each cell and a single section box **406** is provided for each pot line. Each section box includes one ground detector **408,** an isolator **410,** and a calibrating power supply **412.**

As subsequently explained in greater detail, data read from a cell **402** is transferred over a bus **414** to its associated multiplexer **404** and control signals from the data processor are passed through the multiplexer and the bus **414** to perform various control functions in the cell. All of the multiplexers for one pot line are connected in parallel to a data bus **416** and this data bus is connected to the section box **406.** The cell multiplexers for a given pot line are also connected in parallel to a ground detector bus **418** and this bus is connected to the ground detector **408** in the section box. The output from the ground detector **408** is tied to the data bus **416** so that either the data on bus **416** or the output of the ground detector **408** may pass through the isolator **410** and over a connecting data bus **420** to the computer interface circuits **422.** Each of the cell multiplexers **404** is also connected in parallel to a control bus **424** which extends through the section box **406** to the computer interface circuits **422.** As subsequently explained, certain leads within control bus **424** are also connected to circuits within the section box **406.**

The control bus **424** contains **14** pairs of leads. One pair of leads is for transmitting one binary bit representing an interrupt signal from the cell multiplexers to the data processor. The remaining thirteen pairs of leads are for transmitting a thirteen bit command or control word containing address, function, and control signals from the data processor to the multiplexers and section box. Within the bus **424** are five pairs of address lines which enable the data processor to address either the section box **406** for a pot line or any one of the cell multiplexers in the pot line. It should be noted that with only five pairs of address lines it is possible to address only **31** addresses. Thus, five pairs of address lines permits the addressing of **30** multiplexers and the section box for each pot line. The selection of the pot line is determined by the program of the data processor which determines which of the interface circuits **422** will be enabled to pass the address signals. For example, if the data processor is working the portion of the program dealing with pot line **1,** and the binary address **00001** is generated, this address would pass through interface circuits 422_1 and select the multiplexer **404** for cell **1** in the first pot line. On the other hand, if the data processor is working that section on the program relating to the third pot line, and generates the address 00001, then this address would pass through interface circuit 422_3 to select the multiplexer **404** for cell **61.**

SECTION BOX

The section boxes **496** are all identical and the details of a typical section box are shown in FIG. **5.** In the lower portion of this Figure the control bus **424** is shown as several busses depending upon the functions performed by the signals appearing on the leads. The bus **424***d* includes two leads for carrying a Function Reset signal, the bus **424***e* includes ten leads for carrying the five digit binary code representing the function to be performed, and the bus **424***f* includes two leads for carrying an Interrupt signal. These leads merely pass through the section box on their way between the multiplexers and the data processor and are not connected to any of the circuits in the section box.

The control bus also includes an address bus **424***a* having ten leads for carrying signals representing a 5-bit binary address, a bus **424***b* having two leads for carrying an Enable signal, and a bus **424***c* having two leads for carrying a Ground Detection Enable signal. At this point it should be noted that in the present system a pair of leads is required to transmit a signal representing a binary bit. A binary **1** is represented by a high level voltage signal on one lead concurrently with a low level voltage on the second lead of the pair. A binary **0** is represented by a low level signal on the first lead of a pair concurrently with a high level signal on the second lead.

Each section box is assigned the address **31.** Five differential receivers **502** are connected to the five pairs of address lines in the control bus **424***a* and when the address **31** appears on the control bus all five differential receivers produce a low level output signal. The differential receivers are operational amplifiers connected in a comparator configuration. The output of each differential receiver is connected through an inverter **504** to an input of a NAND gate **506.** When the address **31** is present on the control bus NAND **506** produces a low level output signal that is inverted by an inverter **508** and applied to one input of two NAND gates **510** and **512.** A differential receiver **514** has its inputs connected to the pair of leads in the control bus **424***b* which carries the Enable signal. When the signal on these leads specifies Enable the differential receiver **514** produces a low level output signal that disables NAND **512.** At the same time, the output from the differential receiver is inverted by an inverter **516** to condition the second input of NAND **510.** The NAND gate

produces an output signal to energize a solid state relay **518.** As used herein, a solid state relay may be a transistor or any combination of transistors for performing a specified switching function. For an easy understanding of the present description, a solid state relay is treated as though it were an electro-mechanical relay, and is illustrated as such in the drawings.

The relay **518** has a set of normally open relay contacts **518***a* connected in series with a solid state relay **520** across the power supply lines **522** and **524.** When the contacts **518***a* close the relay **520** is energized to open normally closed contacts **520***a* and **520***b* and close normally open contacts **520***c* and **520***d*. The opening of contacts **520***a* and **520***b* disconnects the data bus **416** and the output of ground detector **408** from the input to isolator **410** while the closing of contacts **520***c* and **520***d* connects the output of calibrate power supply **412** to the input of the isolator.

The section box is provided with two power supplies. The logic power supply **526** provides the power for operating the various logic circuits in the section box. The calibrate power supply **412** is a highly regulated power supply which is used for checking the isolator **410.** By applying a control word containing address **31** and an Enable bit to the section box in the manner just explained, the calibrate power supply may be connected to the isolator to apply a known voltage level to the input of the isolator. The output of the isolator is transmitted to the data processor over the bus **420** and from the value of the voltage received at the data processor it may determine if the isolator **410** is functioning properly. When the control word on control bus **424** is terminated the circuits for connecting the calibrate power supply to the isolator return to normal.

The section box is also addressed to read out to the data processor the output from the ground detector **408.** The command, Read Ground Detector includes the address **31** with no Enable bit. The address **31** again causes the output of NAND **506** to condition one input of NAND gate **510** and **512.** However, in the absence of an Enable bit the differential receiver **514** produces a high level output signal. This signal conditions the second input of NAND **512** at the same time that the signal is inverted at **516** to block NAND gate **510.** NAND **512** produces a low level output signal to energize a solid state relay **528.** Relay **528** has a set of normally open contacts **528***a* connected in series with a further solid state relay **530** across the power supply lines **522** and **524.** When relay **530** is energized it opens normally closed contacts **530***a* and **530***b* and closes contacts **530***c* and **530***d*. This disconnects the data bus **416** from isolator **410** and connects the output of the ground detector **408** to the isolator so that the output from the ground detector may pass through the isolator and over bus **420** to the data processor.

As soon as the command Read Ground Detector is terminated on the control bus, the output from NAND **506** disables NAND **512** and the circuits for reading out the output from the ground detector all return to normal.

As explained with reference to FIG. **2,** the counters in the ground detector must be reset at the beginning of the measuring interval and then the inputs of the counters must be enabled over a period of time to enable the counters to accumulate a count. The circuits for generating the counter reset pulse and the counter gating pulse are shown in FIG. **5.** As subsequently explained, the command Determine Status enables the stem voltage drop at one anode of one cell on the pot line to be applied over bus **418** to the ground detector **408** for that pot line. The command Determine Status comprises the Ground Detector Enable bit with an address specifying the multiplexer controlling the cell anode whose status is to be determined. Two leads in the control bus **424***c* carry the voltage levels representing the Ground Detection Enable bit. This bit is applied to a differential receiver **532** and the output of the receiver **532** drops to a low level at the time a measuring interval is to begin. The output of differential receiver **532** triggers a 15 millisecond single shot multivibrator **534** and a 30 second timer **536.** For a period of 15 milliseconds the multivibrator **534** applies a signal over the lead **215** to the ground detector to reset the counters in the ground detector. During this 15 millisecond interval the output of multivibrator **524** is inverted by an inverter **538** to block one input of a NAND gate **540.** The NAND gate **540** has a second input that is conditioned by the output of the 30 second timer **536** as soon as the timer is triggered. At the end of the 15 millisecond reset interval the output of amplifier **538** goes to a high level to condition NAND **540.** The output of NAND **540** is applied over lead **217** to the gating inputs of the counters in the ground detector **408.** At the end of the 30 second interval the output of the timer **536** drops to a low level thus blocking NAND **540** and terminating the gating pulse.

MULTIPLEXER

Addressing and Function Decoding

All of the multiplexers are identical and the circuits for a typical multiplexer are shown in FIGS. **6***a*–**6***c*. Referring to FIG. **6***a*, the leads of the function bus **424***e* are connected to five differential receivers **601** which respond to the combination of voltage levels on the leads to produce the five binary function signals **F1–F5.** The signal **F5** is inverted by an inverter **602** to produce the function signal $\overline{F5}$. The function signals **F1–F4** are applied to a first function decoder **603** (FIG. **6***b*) and to a second function decoder **604,** a portion of which is shown in FIG. **6***b* and a portion of which is shown in FIG. **6***c*. The decoders are both 4-to-16 bit decoders and the function signals **F1–F4** serve to energize the decoders to select one of the **16** possible outputs from each of the decoders. The function signal **F5** is applied to the decoder **604** whereas the function signal $\overline{F5}$ is applied to the function decoder **603.** Thus, if the function signal **F5** is present, the signals **F1–F4** may energize decoder **604** whereas if the signal $\overline{F5}$ is present the signals may energize the decoder **603.** However, since the function signals appearing on the function bus **424***e* are applied simultaneously to all of the multiplexers on the pot line it is necessary to limit the function decoding operation to only those functions intended for the particular multiplexer addressed. This is accomplished as follows.

In FIG. **6***a*, the signals on the address bus **424***a* are applied to five differential receivers **605** which have their outputs connected to input terminals of a manual plug board **606.** Two NAND gates **607** and **608** have multiple inputs that are also connected to output terminals of the plug board **606.** The output of NAND **608** is connected by way of a lead **609** to one input of NAND **607** so as to form an extended NAND gate, as is well known in the art. Manually inserted plug wires

610 are used to selectively connect the outputs of the differential receivers 605 to the inputs of NAND 607 and NAND 608. Each multiplexer on the pot line is assigned a different address and the plug wiring 610 is such that when the combination of address signals on address bus 424*a* corresponds to the address of the multiplexer a low level output signal is produced at the output of NAND 607. The output of NAND 607 is connected through an inverter 611 and over leads 612 and 613 to the gates 614 and 615 (FIG. 6*b*). Thus, when the multiplexer is addressed one of the function decoders 603 or 604 may be energized to produce an output signal on one of its 16 output leads. If the function signal F5 is present then the decoder 604 will produce an output signal on one of its 16 output leads, the particular output lead energized being determined by the combination of signals F1–F4. On the other hand, if the signal $\overline{F5}$ is present then the decoder 603 will produce an output signal on one of its 16 output leads, the particular output lead energized being determined by the combination of signals F1–F4.

Each output from the decoders 603 and 604 controls one of a series of flip-flops (FF) 616–624 and each flip-flop controls a function. A further function flip-flop 625 is provided to control the connection of the various anode stem voltages to the data bus 416 or the ground detector bus 418.

All of the flip-flops are reset at the time certain commands are to be performed by the multiplexer. The commands will contain an Enable bit which appears on bus 424*b*. This bit conditions a differential receiver 626 (FIG. 6*a*) which produces a low level output signal. This signal is inverted by an inverter 627 and applied to one input of a NAND gate 628. The address applied to differential receivers 605 causes the output of NAND 607 to go to a low level. The output of NAND 607 is inverted at 611 to condition the second input of NAND gate 628. The gate produces a low level output signal that is inverted by inverter 629 before being applied to a NOR circuit 630. The NOR circuit produces a low level output signal when any input is at a high level. The low level output of NOR 630 is applied over a lead 631 to the reset inputs of the function control flip-flops 616–625 (FIGS. 6*b* and 6*c*). Immediately thereafter, one of the decoders produces an output signal, as previously described, to set one of the flip-flops 616–624.

The various functions performed by a multiplexer in response to various commands will now be explained. Read Stem Voltage: This command causes the multiplexer to connect the voltage sensing leads 38 and 40 (FIG. 1) for one anode stem to the data bus 416 so that the voltage may be sensed by the data processor. The command includes the address of the multiplexer, the function code, and the Enable bit is a binary 1. The function code identifies the particular anode of the addressed cell that is to have its anode stem voltage drop read onto the data bus. Thus, the function code may represent any number between one and eighteen, assuming the cell has 18 anodes 11. The address and Enable bits reset the function flip-flops 616–625 and energize the decoder 603 or 604 as previously described. Assume that the function is 00001 so that decoder 603 produces an output signal on lead 632. This signal sets the function flip-flop 616. Two solid state relays 634 and 636, having normally open contacts 634*a* and 636*a*, respectively, are connected to the output of FF616. The output of the flip-flop energizes the relays 634 and 636 to close the contacts 634*a* and 636*a*. The contacts 634*a* and 636*a* have one side connected to the leads 38, and 40, respectively, which are attached to the anode stem of the anode block 11_1 shown in FIG. 1. Thus, when the flip-flop 616 is energized the voltage at this anode stem is applied through the contacts 634*a* and 636*a* to a pair of leads 638 and 640.

From the leads 638 and 640 the measured stem voltage is applied to the data bus 416 through a pair of contacts 650*a* and 650*b*. These contacts are closed at this time because FF625 is reset. The high level output signal on output lead 641 from the flip-flop is applied to one input of a NAND gate 642 (FIG. 6*a*). When the multiplexer is addressed and NAND gate 607 produces a low level output signal, this signal is inverted by inverter 611 and conditions the second input of NAND gate 642. Thus, when FF625 is reset the gate 642 produces a low level output signal that is inverted by an inverter 644 and applied over a leads 646 to FIG. 6*b* where it energizes a solid state relay 648. The relay has a single set of normally open contacts 648*a* connected in series across the power supply with a mercury relay 650. The mercury relay 650 has two sets of normally open contacts 650*a* and 650*b* which connect the leads 638 and 640 to the data bus 416. The stem voltage drop at the anode stem 11_1 is thus applied to the data bus from whence it may pass through the section box to the data processor. When the address on bus 424*a* is terminated, the output of NAND 642 goes to the high level. This releases relay 648 (FIG. 6B) which in turn releases relay 650 and its associated contacts 650*a* and 650*b*. When these contacts are opened the stem voltage is disconnected from data bus 416. However, the function flip-flop 616 remains energized and will be reset only when the multiplexer is again addressed with a command that includes the enable bit.

The commands for reading the stem voltage drops at stems 2 through 18 differ from the command for reading the stem voltge drop at stem 1 only in the function code. Thus, if the function code were 00010 the voltage drop at stem 2 would be connected to the data bus, etc. — and if the function code were 18 then the voltage drop at stem 18 would be connected to the data bus. Referring to FIG. 6*b*, this requires 18 function flip-flops like FF616, each flip-flop controlling two solid state relays corresponding to 634 and 636, the relays having contacts corresponding to contacts 634*a* and 636*a*. Sixteen of the flip-flops are controlled by decoder 603 but only the one flip-flop 616 is shown in the drawing. Two of the flip-flops are controlled by decoder 604 and only one of these, i.e., FF617 is shown. Determine Status: This command comprises an address and a binary one bit on the ground detection enable bus 424*c*. No function code, or enable bit is required. However, the command must be preceded by a command Read Steam Voltage which reads the stem voltage drop at the anode whose grounded/ungrounded status is to be determined. The Read Stem Voltage command leaves the function flip-flop, such as FF616 for stem 1, set so that the stem voltage drop appears across leads 638 and 640. Subsequently, the Determine Status command energizes the differential receiver 652 (FIG. 6*b*) and the output of the receiver is applied over a lead 654 to set FF625. At this time the low level output signal from the flip-flop energizes solid state relay 655 and the relay closes its contacts 655*a*.

The contacts **655***a* are connected in series with a mercury relay **656** having two sets of normally open contacts **656***a* and **656***b*. When contacts **655***a* are closed relay **656** is energized to thus close contacts **656***a* and **656***b*. This connects the stem voltage for the selected anode, now appearing on leads **638** and **640**, to the leads **201** and **202** of the ground detector bus **418**. The voltage is applied to the ground detector **408** in the section box serving the multiplexer. As previously explained, the ground detector is enabled by the ground detector enable bit on bus **424***c* so that its counters are reset and their input gates opened to receive the two sequences of pulses that are derived from the stem voltage.

The Determine Status command includes an address only to reset a flip-flop **750** (FIG. **6***a*) for reasons that will later be explained.

To summarize, it takes three different commands to provide an indication to the computer of the grounded or ungrounded status of an anode. A command Read Stem Voltage sets a function relay to connect the stem voltage for the selected anode to leads **638** and **640**. A command Determine Status conditions the ground detector **408** to conduct a 30 second measurement, and connects the stem voltage on leads **638** and **640** to the ground detector bus. Finally, after the measurement has been completed, a command Read Ground Detector reads out onto the data bus **416** from the ground detector **408** a binary bit indicating whether the anode is grounded or ungrounded. Read Cell Voltage. The purpose of this command is to read the voltage drop between the anode bus **12** and the cathode bus **23** (FIG. **1**), and apply the voltage over data bus **416** and bus **420** to the data processor. The command contains the address of the multiplexer associated with the cell whose voltage is to be determined, a function code identifying the operation to be performed, and an enable bit.

The enable bit and the address reset the function flip-flops **616–625**, and the function code with the address energizes the decoder **604** in the manner previously described. The decoder produces an output signal to set FF**620**. The output of FF**620** energizes two solid state relays **658** and **659** having contacts **658***a* and **659***a* associated therewith. When FF**620** is set the contacts **658***a* and **659***a* close.

The contacts **658***a* and **659***a* are connected on one side to the leads **638** and **640**. On the other side, the contacts are connected by leads **42** and **44** to the anode bus **12** and the cathode bus **23**. When the contacts **658***a* and **659***a* close, the voltage drop across the cell appears on leads **638** and **640**. Ground detector bus FF**625** is reset so the contacts **650***a* and **650***b* are closed, as described above. Thus, the voltage drop across the cell is applied to the data bus **416** from whence it passes through the section box to the data processor. Break Crust: During the reduction process it is necessary to break the crust which forms on the surface of a cell so that more alumina may be added to the cell. In a typical cell, motor driven means may be provided to break the crust at one, the other, or both ends of the cell. Thus, there are three commands to control crust breaking, the commands differing only in their function codes. Each command includes the address, the function code, and an enable bit, which operate as described above to reset all of the function flip-flops **616–625**, energize the decoder, and set one of the function flip-flops. Specifically, if the command is Break Crust End **1** FF**623** (FIG. **6**C) is set. If the command is Break Crust End **2** FF**622** is set, and if the command is Break Crust Both Ends FF**621** is set.

Referring now to FIG. **6***c*, there is shown the logic power supply **670** for the multiplexer, and an auxiliary power supply **672**. Both power supplies are connected to a source of power through a transformer **674**. The transformer output leads **676** and **678** are connected through a pair of normally closed contacts **774***e* and **774***f* to a pair of leads **682** and **684**. A plurality of Triacs **686, 688** and **690** are connected to the lead **682**, and are further connected in series with one of a plurality of electro-mechanical relays **692, 694,** and **696**. The relays are located in a relay panel remote from the multiplexer and each of the relays has a pair of normally open contacts which may be connected in parallel with manual switches. The relay contacts or the manual switches may energize motors to perform such functions as moving the anode bridge up or down, dumping of at one end or the other of a cell, or breaking the crust near one, the other, or both ends of the cell.

The Triacs are controlled by the output of the function decoder **604**. If the command to be performed by the multiplexer is Break Crust End **1**, the function signals will cause the decoder **604** to produce an output signal on lead **698** to set FF**623**. The output of FF**623** energizes a solid state relay **702**. The relay **702** has a set of normally open contacts **702***a* connected between the gate electrode of Triac **688** and the lead **704**. The lead **704** is connected to one side of a set of contacts **706***a* on an auto-manual control switch **706** which is located remote from the multiplexer. The other side of switch contacts **706***a* is connected to the lead **684**. If the switch **706** is in the auto position, indicating that operations are under data processor control, the closing of switch contacts **702***a* causes Triac **688** to conduct thereby energizing relay **694**. The relay contacts **694***a* close to energize a motor (not shown) to break the crust at the designated end of the cell.

The function decoder **604** produces an output signal on a lead **707** to set FF**622** if the command to be performed is Break Crust End **2**. FF**622** controls a solid state relay **704** having contacts **604***a* which in turn control Triac **690** to energize electro-mechanical relay **696** and close its contacts **696***a*.

If the command to be performed is Break Crust Both Ends then the function decoder **604** produces an output signal on lead **710** to set FF**621**. This flip-flop has two solid state relays **714** and **716** connected to its output. Relay **714** has a set of contacts **714***a* connected in parallel with the contact **704***a* and the relay **716** has a set of normally open contacts **716***a* connected in parallel with the contacts **702***a*. Thus, when FF**621** is energized both Triacs **688** and **690** are rendered conductive and both relays **694** and **696** are energized to close the contacts **694***a* and **696***a*. This energizes the motors (not shown) for driving the crust breaking apparatus at both ends of the cell.

Once begun, the crust breaking commands continue until the function flip-flop **621, 622** or **623** is reset. The conditions for resetting the function flip-flops are discussed later. Move Bridge Up: When the command to be performed is that of moving the anode bridge up, the function decoder **604** produces an output signal on lead **718** to set FF**624**. The output from this flip-flop energizes a solid state relay **722** having a set of nor-

mally open contacts **724***a* connected in the gating circuit of Triac **686.** When the Triac conducts it energizes electromechanical relay **692** thereby closing the contacts **692***a* in a circuit which will supply the voltage for driving a bridge jack motor. This voltage may be applied to the bridge jack **19** (FIG. **1**) over the leads **20** and **22** to move the anode bridge upwardly.

To avoid further repetition, the circuits responsive to the commands for moving the anode bridge down, or dumping alumina into one end or the other of the cell are not shown. Each of these circuits is energized by an output lead from the decoder **604** and includes a flip-flop like **624,** a solid state relay like **722,** a Triac like **686,** and an electro-mechanical relay like **692.** Switch Status: This command is provided to enable the data processor to determine whether the switch **706** is in the auto or the manual position. Output leads **730** and **732** of the auxiliary power supply **672** are connected through switch contacts **706***b* and **706***c* to a pair of leads **734** and **736.** These leads extend into FIG. **6***b* where they are connected through normally open contacts **742***a* and **744***a* to the leads **638** and **640.** When the data processor wishes to determine the status of switch **706** associated with the multiplexer, it applies the Switch Status command including an address, a function code, and an enable bit, to the multiplexer. The function flip-flops are reset as for commands previously described, and then the decoder **706** produces an output signal on leads **738** to set FF**618.** The output of this flip-flop energizes two solid state relays **742** and **744** for closing the contacts **742***a* and **744***a*. If the switch **706** is set for Automatic control then switch contacts **706***b* and **706***c* are closed and the output voltage of the auxiliary power supply **672** is applied to the leads **638** and **640** through contacts **742***a* and **744***a*, from whence it passes through contacts **650***a* and **650***b* (closed because FF**625** is reset) to the data bus **416** and eventually to the data processor. On the other hand, if switch **706** is in the manual position contacts **706***b* and **706***c* are open and no voltage is applied across the leads **638** and **640** from the power supply. This condition is transmitted to the data processor over the data bus to signify that the switch is in the manual position.

RESET AND ERROR CONTROL

Each multiplexer is provided with circuits for detecting various abnormal conditions resulting from cell upset, circuit failures, or programming errors. Upon detecting any of these conditions the multiplexer generates an interrupt signal that is transmitted to the data processor. Upon receipt of the interrupt signal the data processor may enter a diagnostic routine to discover what the abnormal condition is and, depending upon the condition, possibly emit commands to the multiplexer to correct the condition.

The circuits for producing the interrupt signal are shown in FIG. **6***a* and include a flip-flop **750.** This flip-flop is connected to the output of NAND gate **607** by a lead **751** so that FF**750** changes state each time the multiplexer is addressed. That is, one addressing of the multiplexer sets FF**750** and the next addressing resets FF**750.** One output of FF**750** is connected to a NAND **752** and the other output is connected to a timer circuit **753** which has its output connected as a second input to NAND **752.**

Normally, FF**750** is in a state such that one output blocks NAND **752.** When the multiplexer is addressed a first time, the address causes the output of NAND **607** to go to a low level thus changing the state of FF**750.** The signal on lead **754** conditions one input of NAND **752** and the signal on lead **755** triggers the timer **753.** After some predetermined interval, say 45 seconds, the output of timer **753** conditions the second input of NAND **752** if FF**750** has not changed state as a result of a second address causing the output of NAND **607** to go low a second time.

Normally, the programming of the data processor should be such that the multiplexer is addressed a second time within 45 seconds after it is addressed a first time. The reason for this is that the first address may be associated with a command such as Move Bridge Up. As explained above, this causes circuits to energize a motor to move the anode bridge upwardly. If this command is not cancelled then the anode bridge might be moved upwardly to such an extent that one or more anodes might be withdrawn from the electrolyte. Since the anodes carry currents in the range of several tens of thousands of amperes, the open-circuiting of the cell in this manner would obviously be undesirable.

Assuming that the second addressing of the multiplexer does not occur within 45 seconds of the first addressing, an interrupt signal is generated. After 45 seconds the output of timer **753** conditions NAND **752** and, since FF**750** has been triggered only once it further conditions NAND gate **752.** The gate produces an output signal that is inverted at **756,** inverted again by a NOR circuit **757,** and applied to a single shot multivibrator **758.**

When multivibrator **758** receives a signal at its input, it triggers a timer **759** and applies a signal to a tri-state logic circuit which includes NOR circuits **760** and **761,** inverter **762,** and an AND gate **763.** The tri-state logic circuit may be of a type such as the model DM8831 which is commercially available from the National Semiconductor Co. The tri-state logic circuit produces across the two leads in interrupt control bus **424***f* a voltage differential representing an interrupt signal. This signal exists until the timer **759** times out, and is applied over bus **424***f*, through the section box, to the data processor.

The purpose of timer **759** is to prevent the tri-state logic circuit from emitting several interrupt signals in a short interval of time as a result of a single abnormal condition triggering multivibrator **758** several times. This might occur as a result of pot voltae fluctuations which might trigger the multivibrator several times when an upset condition occurs in the cell, as described later. When the multivibrator **758** is triggered it turns on timer **759.** The output of timer **759,** acting through NOR **760** maintains a high impedance at the output of the tri-state logic circuit for a fixed interval of time after the multivibrator is first triggered. Thus, even though the multivibrator may be triggered by an output signal from NOR **756,** then time out and return to its initial condition, and then in a very short interval be triggered again, the tri-state circuit will produce only one interrupt signal. At the time the multivibrator is triggered the second time, the tri-state logic circuit is being inhibited by the timer circuit **759** so a second interrupt signal is not produced.

When an interrupt signal is generated because FF**750** is not reset within a given interval after it is set, the function flip-flops **616–625** are reset and an alarm is sounded to call the operator's attention to the cell. The

output signal from NAND **752** is inverted at **756** and applied over lead **770** to NOR **630.** The resulting output signal from NOR **630** is applied over lead **631** to FIGS. **6***b* and **6***c* where it resets the function flip-flops **616–625.**

The output of inverter **756** is also applied over a lead **771** to FIG. **6***c* where it energizes a solid state relay **772.** Relay **772** has a set of normally open contacts **772***a* connected in series with a set of normally closed contacts **773***a*and a solid state relay **774.** The series circuit is directly connected across the output of transformer **674** so when contacts **772***a* close, relay **774** is energized.

Relay **774** has a set of normally open contacts **774***a* connected in parallel with contacts **772***a*. Contacts **774***a* close to provide a holding circuit for holding relay **774***a* energized after relay **772** returns to the deenergized state. An indicator lamp **775** is connected in parallel with relay **774,** and as long as the relay is energized the lamp is on to visually indicate to an operator that an interrupt condition exists as a result of failure to cancel a commanded function, or, stated differently, failure to reset FF**750** within the required time.

Relay **774** controls normally closed contacts **774***e* and **774***f* so that when the relay is energized the contacts open. This removes power from the triacs so that any function being controlled by the Triacs is immediately terminated.

Relay **774** has a set of normally open contacs **774***b* connected in series with manual switch contacts **706***d* and a speaker, bell, or other audible alarm **776.** The series circuit is connected across the output of transformer **674** so when relay **774** is energized the alarm **776** is sounded if the switch **706** is in the auto position.

Relay **774** has two further sets of normally open contacts **774***c* and **774***d* connected between the output leads **730** and **732** of the auxiliary power supply **672** and two further leads **777** and **778.**

To digress for a moment, a multiplexer may send an interrupt signal to the data processor as a result of failure to reset FF**750** within the required time, as described above, or as a result of an over-voltage across the cell, as subsequently described. Failure to reset FF**750** causes relay **774** to be energized as just described whereas the over-voltage condition causes an interrupt signal without energizing relay **774.** The course of action to be taken by the data processor is determined by what caused the interrupt, so means must be provided to enable the data processor to determine the cause. This is done by the data processor by issuing a command called Determined Failure which checks the status of relay **774.**

The Determine Failure command includes an address, a function code, and an enable bit. These signals function to reset function control flip-flops **616–625** as previously described, and then enable decoder **604** (FIG. **6***b*) to set FF**619.** This flip-flop controls two solid state relays **779** and **780** having normally open contacts **779***a* and **780***a*. When FF**619** is set, the contacts close thus connecting leads **777** and **778** to leads **638** and **640.** Since FF**625** is reset, contacts **650***a* and **650***b* are closed so that the Determine Failure command places on data bus **416** the voltage appearing across leads **777** and **778.** In FIG. **6***c*, if relay **774** is energized the contacts **774***c* and **774***d* apply the output of the auxiliary power supply **672** to the leads **777** and **778.** On the other hand, if the interrupt is the result of an over-voltage condition relay **774** will not be energized so there will be no voltage across leads **777** and **778.** Thus, the data processor will receive over the data bus either a voltage differential indicating the interrupt was caused by failure to reset FF**750,** or no voltage differential indicating the interrupt was caused by an over-voltage across the cell.

It should be noted that when the data processor receives an interrupt signal it cannot, from that signal alone, determine which of the cells on the pot line generated the interrupt. Thus, when an interrupt signal is received by the data processor it must generate one Determine Failure command for each cell on the pot line. These commands will differ from each other only in the address portion so that the multiplexers on the pot line are addressed in turn. By the response signal it receives over data bus **416,** the data processor is able to identify which, if any, of the multiplexers generated an interrupt signal as a result of failure to reset a FF**750.** If, after addressing each multiplexer, the data processor received no signal on data bus **416** as a result of a relay **774** being energized, this is an indication that the interrupt was a result of an over-voltage across a cell. The data processor may then be programmed to execute a sequence of Read Cell Voltage commands to locate the cell which caused the interrupt.

If the data processor determines that the interrupt signal is a result of the failure to reset a FF**750,** it generates the command Failure Reset. This command comprises a single binary bit on the bus **424***d* and is applied to all the multiplexers for the pot line. In FIG. **6***a*, the Failure Reset command is applied to a differential receiver **781.** The output of the differential receiver is applied over a lead **782** to reset FF**750.** The output of the differential receiver is inverted by an inverter **783** and applied over a lead **784** to NOR **630.** The output of NOR **630** is applied to FIGS. **6***b* and **6***c* when it resets the function flip-flops **616–625.**

The output of inverter **783** is inverted by an inverter **785** and applied over a lead **786** to FIG. **6***c* where it energizes a solid state relay **773.** This relay controls normally closed contacts **773***a* so when the relay is energized the contacts **773***a* open. This opens the circuit to relay **774** and lamp **775.** Relay **774** drops out so its contacts transfer. This shuts off the audible alarm **766,** disconnects the auxiliary power supply **672** from the leads **777** and **778** and reapplies power to the Triacs. As soon as the Failure Reset command is terminated, relay **773** returns to normal. The circuit is now cleared of its error-indicating condition.

As previously stated, the voltage drop across the cell is continuously monitored and an interrupt signal produced if the voltage drop becomes excessive. An abnormally high voltage drop generally indicates an "upset" condition in the cell that requires correction.

In FIG. **1,** the voltage drop across the cell is available on leads **42** and **44** connected to the anode bus **12** and the cathode bus **23.** The lead **42** (FIG. **6**B) is connected to the parallel combination of a Zener diode **765** and a solid state relay **766.** Lead **44** is connected through a resistor **767** and a Zener diode **768** to the other side of diode **765** and relay **766.** As long as the voltage drop across the cell is within normal limits, say 4.5V, diode **768** does not conduct and relay **766** is not energized. However, if the voltage drop across the cell should increase above normal limits for any of the reasons well known in the art, the breakdown voltage of diode **768**

will be exceeded and the diode will conduct, thus energizing relay **766**. The relay closes its contacts **766***a* so that a signal is applied over lead **790** to NOR **757** (FIG. **6***a*). The output of NOR **757** triggers multivibrator **758** to generate an interrupt signal on bus **424** as previously described. The diode **765** is connected in parallel with solid state relay **766** to protect the relay by limiting the voltage applied to the relay to the breakdown voltage of the diode.

While a preferred embodiment of the invention has been described in specific detail, it should be understood that various modifications and substitutions may be made therein without departing from the spirit and scope of the invention as defined by the appended claims.

What is claimed is:

1. The method of detecting the position of an anode in an alumina reduction cell, said method comprising the steps of:

measuring the total current through said anode over an interval of time and generating a reference value corresponding to the number of current fluctuations which normally would occur during said time interval from the formation and release of gas bubbles at said anode when operating the cell with a properly adjusted anode for the current measured;

deriving from said measured current a second value corresponding approximately to the number of substantially sinusoidal current fluctuations which actually occur during said interval of time; and,

comparing said reference value with said second value to produce a signal indicating maladjustment of the anode.

2. The method as claimed in claim **1** wherein:

said total current is measured by producing a voltage which varies as said total current varies;

said voltage is converted to a sequence of pulses having a frequency proportional to the rate of said current fluctuations; and,

said pulses are counted over said interval of time to produce said reference value.

3. The method as claimed in claim **2** wherein said voltage representing total anode current is filtered to eliminate components due to current fluctuations at frequencies outside the range of frequencies selected for determining the rate at which gas bubbles are formed and released at the anode, to thereby produce a second sequence of pulses, said pulses of the second sequence being counted over said interval of time to derive said second value.

4. The method as claimed in claim **3** wherein said comparison step comprises comparing said reference value with said second value to produce a first output signal when said reference value is greater than said second value or a second output signal when said reference value is less than said second value.

5. The method of detecting a grounded anode in a multiple anode alumina reduction cell, said method comprising:

sensing current flow through an individual anode to produce a voltage proportional thereto;

converting said voltage to a sequence of pulses representing the rate at which anode current fluctuations would normally occur due to gas bubbles being formed and released at said anode when operating the cell with the anode properly adjusted;

counting said pulses over a predetermined interval of time to produce a reference value;

measuring the actual fluctuations in said voltage which occur within a selected range of frequencies for indicating the rate at which gas bubbles are formed and released at said anode, to thereby produce a second value; and

comparing said reference value with said second value to produce a signal indicating that said anode is grounded if said reference value is greater than said second value.

6. The method as claimed in claim **5** wherein the measuring of said actual voltage fluctuations comprises the steps of:

filtering said voltage to remove therefrom fluctuations at frequencies above and below the range of frequencies selected for determining the rate at which gas bubbles are formed and released at said anode to thereby produce a second sequence of pulses; and,

counting said pulses to thereby produce said second value.

7. The method as claimed in claim **6** wherein the measuring of said actual voltage fluctuations further includes:

rectifying said filtered voltage to obtain a rectified voltage;

integrating said rectified voltage;

comparing said integrated voltage with said filtered voltage; and,

producing a pulse in said second sequence of pulses only when said filtered voltage exceeds a predetermined magnitude relative to said integrated voltage.

8. Apparatus for determining the position of an anode in an alumina reduction cell, said apparatus comprising:

means for producing a voltage representing current flow through said anode;

voltage to frequency converter means for converting said voltage to a first sequence of digital pulses having a frequency proportional to the rate at which current fluctuations would normally occur when said anode is properly positioned;

digital counter means for counting said digital pulses to develop a reference value;

pulse shaper means responsive to said voltage representing current flow for producing a second sequence of pulses wherein each pulse represents an actual fluctuation in anode current;

comparison means responsive to said counter means and said pulse shaper means over a given interval of time for indicating maladjustment of the anode when said first sequence contains more pulses than said second sequence during said interval.

9. Apparatus as claimed in claim **8** wherein:

said comparison means comprises a second counter means responsive to said second sequence of pulses and a digital comparator for comparing the counts in said counters.

10. Apparatus as claimed in claim **9** wherein said pulse shaper means comprises filter means responsive to said voltage for passing only the fluctuations in said voltage that corresponding to a range of frequencies selected for determining the rate at which gas bubbles are formed and released at said anode.

11. Apparatus as claimed in claim 10 wherein said pulse shaper means comprises:

rectifier means responsive to said filtered voltage to produce a rectified voltage;

means for integrating said rectified voltage to obtain the average value thereof; and,

comparator means responsive to said integrating means and said filter means for producing a digital output pulse when the output voltage of said filter means exceeds the output voltage of said integrating means.

12. Apparatus as claimed in claim 10 wherein:

said filter means includes first and second filters connected in parallel circuits and both responsive to the voltage representing anode current flow;

an inverter connected to the output of said second filter; and,

summing means connected to the outputs of said first filter and said inverter.

13. Apparatus as claimed in claim 12 wherein:

said first filter comprises means for filtering from said voltage fluctuations those frequencies greater than the highest frequency of said range; and,

said second filter comprises means for filtering from said voltage frequencies greater than the lowest frequency of said range.

14. The method of determining a grounded anode condition in an alumina reduction cell, said method comprising the steps of:

establishing a general relationship between anode current and the period between fluctuations in anode stem voltage for normal operation of the cell;

measuring the anode current and the period between its fluctuations for an anode whose condition is being determined; and

determining if said measured period between fluctuations is greater than the corresponding period for said established relationship, at said measured current, said measured period being greater if said anode is grounded.

* * * * *