OPIC
Office de la propriété intellectuelle du Canada

CIPO
Canadian Intellectual Property Office

(12) (19) (CA) **Demande-Application**

(21) (A1) **2,306,482**
(86) 1998/07/23
(87) 1999/02/04

(72) HOFFMAN, JOSEPH A., US
(72) LINDEMAN, DAVID D., US
(72) RADEWALD, VERN E., US
(72) RANGER, MICHEL, CA
(72) ROUILLARD, ROGER, CA
(72) TRICE, JENNIFER L., US
(72) TURGEON, THOMAS A., US
(71) HYDRO-QUEBEC, CA

(51) Int.Cl.[6] H01M 10/04, H01M 2/10
(30) 1997/07/25 (08/900,429) US

(54) **DISPOSITIF ET PROCEDE DE PRESSION POUR PILES ELECTROCHIMIQUES RECHARGEABLES A COUCHE MINCE**

(54) **PRESSURE SYSTEM AND METHOD FOR RECHARGEABLE THIN-FILM ELECTROCHEMICAL CELLS**

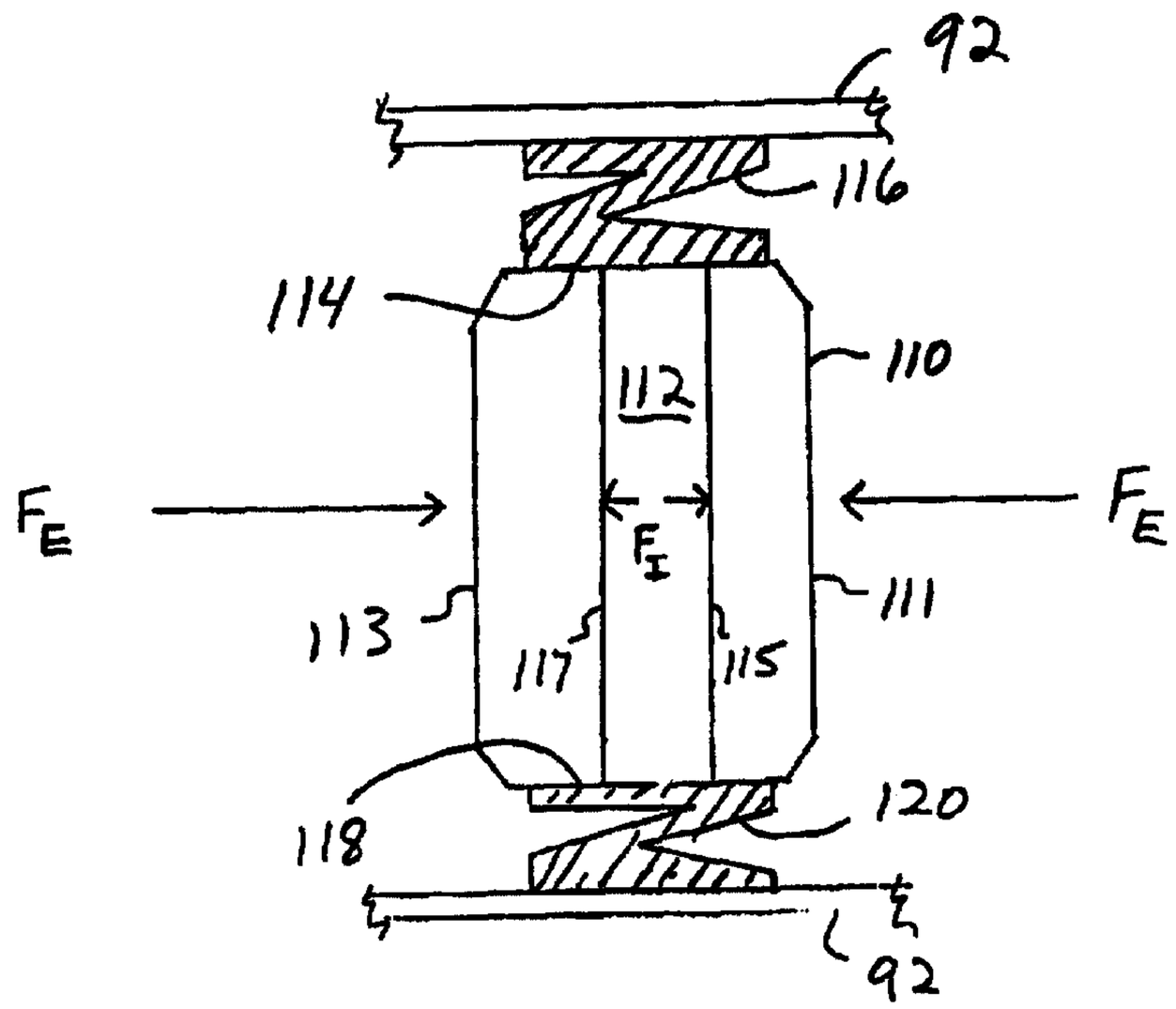

(57) Dispositif et procédé servant à améliorer la capacité de piles électrochimiques rechargeables à couche mince. Ce dispositif de pression maintient une pile électrochimique ou un groupement de piles électrochimiques dans un état de compression pendant le cycle de charge et de décharge des piles. On peut mettre

(57) An apparatus and method for improving the performance of rechargeable thin-film electrochemical cells is disclosed. The pressure apparatus maintains an electrochemical cell or a grouping of electrochemical cells in a state of compression during charge and discharge cycling of the cells. The pressure apparatus

OPIC
Office de la propriété intellectuelle du Canada

CIPO
Canadian Intellectual Property Office

(21) (A1) **2,306,482**
(86) 1998/07/23
(87) 1999/02/04

ce dispositif en application à l'extérieur d'une pile ou d'un groupement de piles ou à l'intérieur d'une ou de plusieurs piles. On peut incorporer un élément de ressort métallique ou élastomère à la structure de la pile électrochimique afin de placer cette dernière dans un état de compression. Un dispositif de pression extérieure peut comporter une ou plusieurs bandes et une paires de plaques de pression coopérant de manière à maintenir un groupement de piles en compression pendant le cycle de charge et de décharge. L'une ou les deux de ces plaques de pression peuvent comprendre plusieurs ressorts individuels, tels que des ressorts à boudin, des ressorts ondulés ou des ressorts à rondelles Belleville. La bande peut incorporer un ressort solidaire, tel qu'un ressort ondulé ou un ressort en Y, exerçant une résistance à la traction dans la bande, ce qui a pour effet de tirer les plaques de pression et les piles les unes contre les autres. On peut insérer des ressorts plats métalliques ou élastomères entre la totalité des piles ou entre des piles sélectionnées afin de générer des forces de compression à l'intérieur d'un groupement de cellules. On peut mettre sous pression gazeuse un boîtier contenant les groupements de cellules afin de mettre les cellules en compression.

may be implemented external to a cell or grouping of cells, or internally within one or more cells. An elastomeric or metallic spring element may be incorporated into the structure of an electrochemical cell to place the cell in a state of compression. An external pressure apparatus may include one or more bands and a pair of thrust plates which cooperate to maintain a grouping of cells in compression during cell cycling. One or both of the thrust plates may include a number of individual springs, such as coil, wave, or Belleville springs. The band may incorporate an integral spring, such as a wave or sine-shaped spring, that produces a tensile force in the band which pulls the thrusts plates and cells together. Elastomeric or metallic flat springs may be inserted between all or selected cells to generate compressive forces within a grouping of cells. An enclosure containing the grouping of cells may be gas-pressurized to place the cells in compression.

PCT WORLD INTELLECTUAL PROPERTY ORGANIZATION
International Bureau

INTERNATIONAL APPLICATION PUBLISHED UNDER THE PATENT COOPERATION TREATY (PCT)

(51) International Patent Classification 6 : H01M 10/04, 2/10

A1

(11) International Publication Number: WO 99/05743

(43) International Publication Date: 4 February 1999 (04.02.99)

(21) International Application Number: PCT/US98/15296

(22) International Filing Date: 23 July 1998 (23.07.98)

(30) Priority Data:
08/900,429 25 July 1997 (25.07.97) US

(71) Applicants: MINNESOTA MINING AND MANUFACTURING COMPANY [US/US]; 3M Center, P.O. Box 33427, St. Paul, MN 55133–3427 (US). HYDRO–QUEBEC CORPORATION [CA/CA]; 75 Boulevard Rene–Levesque Ouest, Montreal, Quebec H2Z 1A4 (CA).

(72) Inventors: HOFFMAN, Joseph, A.; Apartment 102, 700 Douglas Avenue, Minneapolis, MN 55403 (US). LINDEMAN, David, D.; 912 Ridge Pass, Hudson, WI 54016 (US). RADEWALD, Vern, E.; 16811 Trail of the Woods, Austin, TX 78734 (US). RANGER, Michel; 640 Terrasse du Ruisseau #302, Lachine, Quebec H8T 3L6 (CA). ROUILLARD, Roger; 315 Prevert, Beloeil, Quebec J3G 2C9 (CA). TRICE, Jennifer, L.; 4382 Braddock Trail, Eagan, MN 55123 (US). TURGEON, Thomas, A.; 1650 Camelot Lane, Fridley, MN 55432 (US).

(74) Agent: HOLLINGSWORTH, Mark, A.; Mueting, Raasch & Gebhardt, P.A., P.O. Box 581415, Minneapolis, MN 55458–1415 (US).

(81) Designated States: AL, AM, AT, AU, AZ, BA, BB, BG, BR, BY, CA, CH, CN, CU, CZ, DE, DK, EE, ES, FI, GB, GE, GH, HR, HU, ID, IL, IS, JP, KE, KG, KP, KR, KZ, LC, LK, LR, LS, LT, LU, LV, MD, MG, MK, MN, MW, MX, NO, NZ, PL, PT, RO, RU, SD, SE, SG, SI, SK, SL, TJ, TM, TR, TT, UA, UG, UZ, VN, YU, ZW, ARIPO patent (GH, GM, KE, LS, MW, SD, SZ, UG, ZW), Eurasian patent (AM, AZ, BY, KG, KZ, MD, RU, TJ, TM), European patent (AT, BE, CH, CY, DE, DK, ES, FI, FR, GB, GR, IE, IT, LU, MC, NL, PT, SE), OAPI patent (BF, BJ, CF, CG, CI, CM, GA, GN, GW, ML, MR, NE, SN, TD, TG).

Published
With international search report.
Before the expiration of the time limit for amending the claims and to be republished in the event of the receipt of amendments.

(54) Title: PRESSURE SYSTEM AND METHOD FOR RECHARGEABLE THIN–FILM ELECTROCHEMICAL CELLS

(57) Abstract

An apparatus and method for improving the performance of rechargeable thin–film electrochemical cells is disclosed. The pressure apparatus maintains an electrochemical cell or a grouping of electrochemical cells in a state of compression during charge and discharge cycling of the cells. The pressure apparatus may be implemented external to a cell or grouping of cells, or internally within one or more cells. An elastomeric or metallic spring element may be incorporated into the structure of an electrochemical cell to place the cell in a state of compression. An external pressure apparatus may include one or more bands and a pair of thrust plates which cooperate to maintain a grouping of cells in compression during cell cycling. One or both of the thrust plates may include a number of individual springs, such as coil, wave, or Belleville springs. The band may incorporate an integral spring, such as a wave or sine–shaped spring, that produces a tensile force in the band which pulls the thrusts plates and cells together. Elastomeric or metallic flat springs may be inserted between all or selected cells to generate compressive forces within a grouping of cells. An enclosure containing the grouping of cells may be gas–pressurized to place the cells in compression.

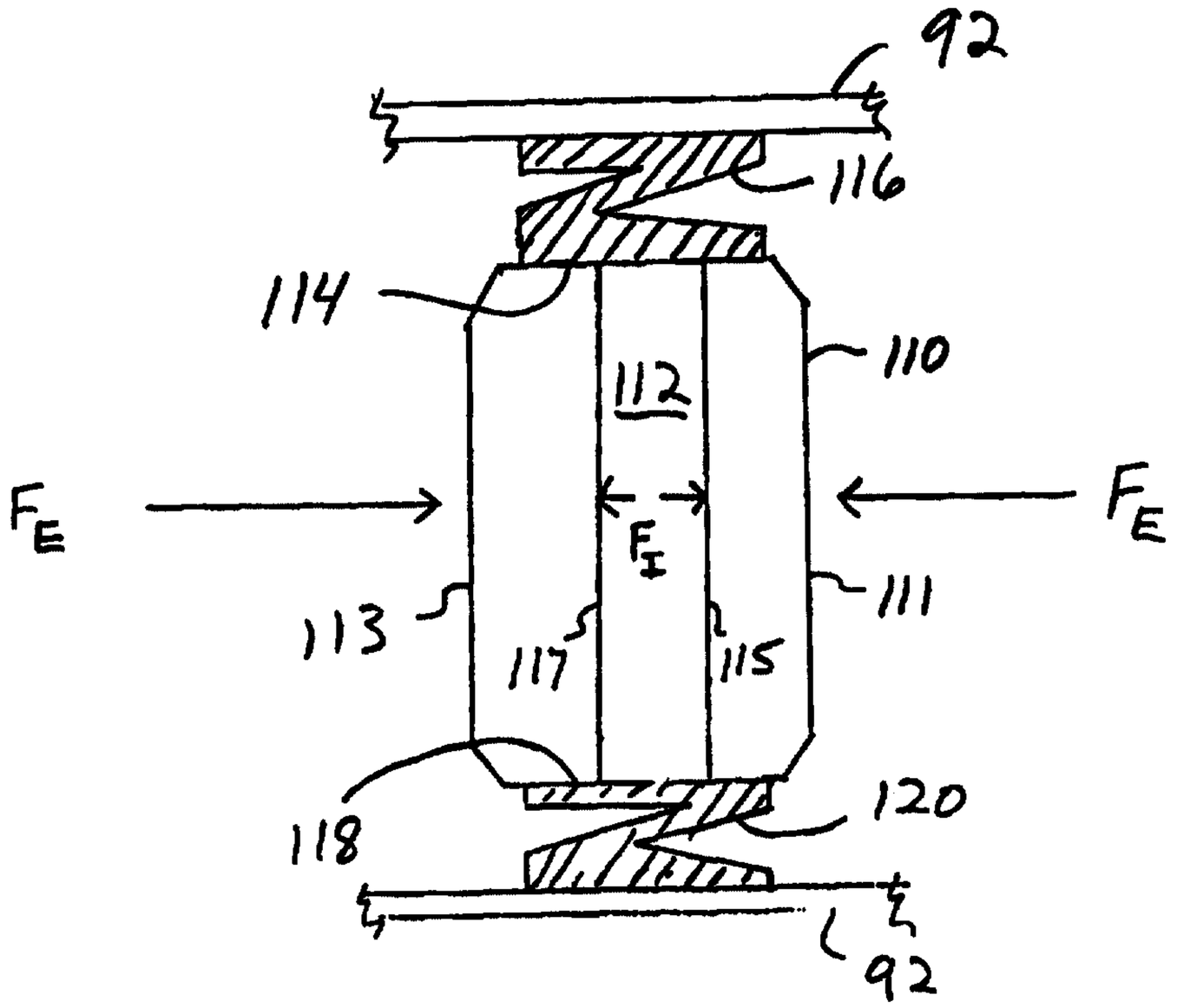

PRESSURE SYSTEM AND METHOD FOR RECHARGEABLE THIN-FILM ELECTROCHEMICAL CELLS

FIELD OF THE INVENTION

This invention relates generally to energy storage devices, and more particularly, to a pressure apparatus and method for improving the performance of rechargeable thin-film electrochemical cells.

BACKGROUND OF THE INVENTION

The demand for new and improved electronic and electro-mechanical systems has placed increased pressure on the manufacturers of energy storage devices to develop battery technologies that provide for high energy generation in a low-volume package. A number of advanced battery technologies have recently been developed, such as metal hydride (e.g., Ni-MH), lithium-ion, and lithium polymer cell technologies, which would appear to provide the requisite level of energy production and safety margins for many commercial and consumer applications.

Such advanced battery technologies, however, often exhibit characteristics that provide challenges for the designers of advanced energy storage devices. For example, certain electrochemical cell structures are subject to cyclical changes in volume as a consequence of variations in the state of charge of the cell. The total volume of such a cell may vary as much as five to

six percent or more during charge and discharge cycling. Such repetitive changes in the physical size of a cell significantly complicates the electrical interconnection strategy and mechanical housing design. The electrochemical and mechanical characteristics of an advanced battery cell must therefore be understood and appropriately considered when designing an energy storage system suitable for use in commercial and consumer devices and systems.

There is a need in the advanced battery manufacturing industry for an electrochemical energy storage device that exhibits high-energy output, and one that provides for safe and reliable use in a wide range of applications. There exists a further need for a packaging configuration which accommodates the unique dynamics of an electrochemical cell which is subject to volumetric changes during charge and discharge cycling. The present invention fulfills these and other needs.

SUMMARY OF THE INVENTION

The present invention is directed to a pressure apparatus and method for improving the performance of rechargeable thin-film electrochemical cells. The pressure apparatus maintains an electrochemical cell or a grouping of electrochemical cells in a state of compression during charge and discharge cycling of the cells. The pressure apparatus may be implemented external to a cell or grouping of cells, or internally within one or more cells. An elastomeric or metallic spring element may be incorporated into the structure of an electrochemical cell to place the cell in a state of compression. An external pressure apparatus may include one or more bands and a pair of thrust plates which cooperate to maintain a grouping of cells in compression during cell cycling. One or both of the thrust plates may include a number of individual springs, such as coil, wave, or Belleville springs. The band may incorporate an integral spring, such as a wave or sine-shaped spring, that produces a tensile force in the band which pulls the thrusts plates and cells together. Elastomeric or metallic flat springs may be inserted between all or selected cells to generate compressive forces within a grouping of cells. An enclosure containing the grouping of cells may be gas-pressurized to place the cells in compression.

BRIEF DESCRIPTION OF THE DRAWINGS

Fig. 1 illustrates an embodiment of a solid-state, thin-film electrochemical cell having a prismatic configuration;

Figs. 2A-2C illustrate various embodiments of a thin-film electrochemical cell;

Fig. 3 is an illustration of another embodiment of an electrochemical cell having a prismatic configuration and including thermal conductors respectively attached to the anode and cathode of the cell;

Fig. 4 is a top view of an electrochemical cell subjected to external compressive forces;

Fig. 5 illustrates an alternative embodiment of an electrochemical cell subjected to both external and internal forces that place the cell in compression;

Figs. 6A-6C illustrate various embodiments of a spring-like element for use within or adjacent to a prismatic electrochemical cell;

Figs. 7-8 illustrate in graphical form a characterization of the state of charge (SOC) of a cell and the percentage of cell compression as a function of pressure, respectively;

Fig. 9 illustrates various packaging configurations of an energy storage device, including cell pack, module, and battery configurations;

Fig. 10 is a perspective view of an energy storage module containing a number of interconnected thin-film electrochemical cells;

Fig. 11 illustrates an embodiment of a grouping of electrochemical cells subjected to externally produced forces for placing the electrochemical cells in compression;

Fig. 12 illustrates an embodiment of a grouping of electrochemical cells subjected to internally and externally produced forces for placing the electrochemical cells in compression;

Figs. 13A-13B shows an embodiment of an external pressure producing apparatus for maintaining a stack of electrochemical cells in a state of compression during charge and discharge cycling;

Figs. 14A-14B shows another embodiment of an external pressure producing apparatus for maintaining a stack of electrochemical cells in a state of compression during charge and discharge cycling;

Fig. 15 illustrates a grouping of electrochemical cells arranged in a cell stack which is maintained in a state of compression by employment of an embodiment of a pressure apparatus;

Fig. 16 is an illustration of a band or strap including a tension producing clamp for use in a pressure generating apparatus for maintaining a stack of electrochemical cells in compression during charge and discharge cycling;

Fig. 17 is a perspective view of the tension producing clamp shown in Fig. 16;

Fig. 18 is an illustration of a band or strap which incorporates a wave spring for use in a pressure producing apparatus for generating compressive forces within a stack of electrochemical cells;

Fig. 19 is a graphical depiction of a relationship between pressure and cell compression when a wave spring apparatus of the type shown in Fig. 18 is employed for producing pressure within a stack of prismatic electrochemical cells;

Figs. 20-21 are cross-sectional illustrations of another embodiment of a pressure generating apparatus

for maintaining a stack of electrochemical cells in a state of compression during charge and discharge cycling;

Figs. 22A-22C illustrates in cross-section another embodiment of a pressure generating apparatus which employs a nested leaf spring mechanism;

Figs. 23-25A, 25B illustrate additional embodiments of a pressure generating apparatus which employs a leaf spring mechanism for maintaining electrochemical cells in a state of compression;

Figs. 26A-26B illustrate a embodiment of a pressure generating apparatus which employs a number of Belleville springs;

Figs. 27A-27C illustrate a embodiment of a pressure generating apparatus which employs a number of wave springs or coil springs; and

Figs. 28A-28C illustrate various types of bellow mechanisms which may be employed in a pressure generating apparatus for maintaining electrochemical cells in a state of compression.

DETAILED DESCRIPTION OF THE EMBODIMENTS

Referring to the drawings, and more particularly to Fig. 1, there is illustrated an embodiment of a solid-state, thin-film electrochemical cell which may be utilized in the fabrication of a rechargeable energy storage device for use in a wide range of applications. In accordance with the embodiment illustrated in Fig. 1, the electrochemical cell 20 is shown as having a flat wound prismatic configuration in which a thin-film solid electrolyte 26 is disposed between a film 24 constituting an anode and a film 28 constituting a cathode.

A central cathode current collector 30 is disposed between each of the cathode films 28 to form a bi-face cell configuration. A mono-face cell configuration may alternatively be employed in which a single cathode current collector 30 is associated with a single anode/electrolyte/cathode element combination. In this configuration, an insulating film is typically disposed between individual anode/electrolyte/ cathode/collector element combinations.

The central cathode arrangement shown in Fig. 1 advantageously reduces by one-half the volume of current collectors incorporated within the cell structure, yet increases the overall strength of the half-cell film structures. The anode films 24 are laterally offset relative to the cathode current collector 30 so as to expose the anode 24 along a first edge 25 of the cell 20, and to expose the cathode current collector 30 along a second edge 23 of the cell 20. The embodiment shown in Fig. 1 includes a force producing core element 22 about which the thin-film electrochemical cell 20 is wound.

In Figs. 2A-2C, there is illustrated various embodiments of a thin-film electrochemical cell which may be used in the fabrication of a rechargeable energy storage device. As is shown in Fig. 2A, a thin-film electrochemical cell may be packaged in a "jelly roll" configuration so as to form a generally cylindrical cell structure in which a first edge 42 of the cell forms a positive contact 43, and a second edge 44 forms a negative contact 45. The positive and negative contacts 43, 45 are formed typically by use of a known metal spraying technique.

Figures 2B and 2C illustrate alternative packaging configurations for a thin-film rechargeable energy storage device. A flat roll configuration, shown in Fig. 2B, or a flat stack configuration, shown in Fig. 2C, provide for the aggregation of a relatively large thin-film cell surface area within a relatively small packaging configuration. Such geometries minimize losses and allow for the efficient transfer of heat to and from the multi-layered cell structure. It is to be understood that various electrochemical cell configurations other than those depicted in the figures may be appropriate to meet the electrical, mechanical, and thermal requirements of a particular application.

In accordance with one embodiment, and with reference to Fig. 1, the electrochemical cell 20 includes a solid polymer electrolyte 26 which constitutes an ion transporting membrane, a lithium metal anode 24, and a vanadium oxide cathode 28. These film elements are fabricated to form a thin-film laminated prismatic structure, which may include an insulation film, such as polypropylene film. A known sputtering metallization process is employed to form current collecting contacts along the edges 25, 23 of

the anode 24 and cathode current collector 30 films, respectively. It is noted that the metal-sprayed contacts provide for superior current collection along the length of the anode and cathode current collector film edges 25, 23, and demonstrate good electrical contact and heat transfer characteristics.

In general, the active materials constituting the solid-state, thin-film electrochemical cell retain chemical and mechanical integrity at temperatures well beyond typical operating temperatures. For example, operating temperatures of up to approximately 180° C may be tolerated. The electrochemical cells depicted generally in the figures may be fabricated in accordance with the methodologies disclosed in U.S. Patent Nos. 5,423,110, 5,415,954, and 4,897,917.

Concerning Fig. 3, there is shown an embodiment of a prismatic electrochemical cell 70 which includes an anode contact 72 and a cathode contact 74 formed respectively along opposing edges of the electrochemical cell 70. The electrochemical cell 70 includes a thermal conductor 71 which is spot welded or otherwise attached to each of the anode and cathode contacts 72, 74, respectively. A thermal conductor 71 is typically disposed along the length of the anode contact 72 and the cathode contact 74. The thermal conductor 71 typically includes an electrical connection lead 75 for conducting current into and out of the electrochemical cell 70 which is collected along the length of the anode and cathode contacts 72, 74. In accordance with one embodiment, the thermal conductor 71 provides a thermal flux path for efficiently transferring thermal energy between the cell 70 and a thermally conductive, electrically resistive material or structure disposed adjacent the cell 70. Further, the

thermal conductor 71 is configured so as to exhibit a spring-like character which provides for substantially continuous contact between the cell 70 and a structure, such as a metallic planar surface, disposed adjacent the cell 70 in response to relative movement between the cell 70 and the adjacent structure. The thermal conductor 71 may have a substantially C-shaped, double C-shaped, Z-shaped, V-shaped, O-shaped, or S-shaped cross-section.

In this embodiment, the electrochemical cell 70 is fabricated to have a length L of approximately 135 mm, a height H of approximately 149 mm, and a width W_{ec} of approximately 5.4 mm or W_{ec} of approximately 5.86 mm when including a foam core element 22. The width W_c of the cathode contact 74 and the anode contact 72 is approximately 3.9 mm, respectively. A cell 70 having the above-described dimensions typically exhibits a nominal energy rating of approximately 36.5 Wh, a peak power rating of 87.0 W at 80 percent depth of discharge (DOD), a cell capacity of 14.4 Ah, and a nominal voltage rating at full charge of 3.1 volts.

The volume of an electrochemical cell of the type described previously with regard to Fig. 1 varies during charge and discharge cycling due to the migration of lithium ions into and out of the lattice structure of the cathode material. This migration creates a corresponding increase and decrease in total cell volume on the order of approximately five to six percent or more during charging and discharging, respectively. It has been determined by the inventors that the performance and service-life of an electrochemical cell is significantly increased by maintaining the layers of the cell in a state of compression. Improved cell performance is realized by maintaining pressure on the

two larger opposing surfaces of the cell. It is considered desirable that the compressive forces, whether produced internally within or externally of the cell, be distributed fairly uniformly over the surface of application.

In the embodiment illustrated in Fig. 4, for example, a cell 90 is shown as being constrained between substantially planar walls 92 of a containment structure. The cell 90 includes two opposing surfaces 91, 93 each having a large surface area relative to the surface area of the four edges of the cell 90. An external force, F_E, is applied to the opposing surfaces 91, 93 so as to maintain the cell 90 in a state of compression. The magnitude of the external force, F_E, typically ranges between approximately 5 psi to 100 psi during charge/discharge cycling. It is understood that the external force, F_E, may be maintained at a constant magnitude, such as 10 psi for example, or may vary between a minimum and a maximum value, such as between approximately 5 and 100 psi. Further, the external force, F_E, may be produced by contact between one surface 91 of the cell 90 and an active pressure generating mechanism, while the opposing surface 93 is restricted from movement by a stationary structure. Alternatively, an active pressure generating mechanism may be applied to both opposing surfaces 91, 93 of the electrochemical cell 90.

Referring to the embodiment illustrated in Fig. 5, an electrochemical cell 110 may be configured to include a central core element 112 which produces a force, F_I, internal to the cell 110. The core element 112, which may include a foam or other type of spring mechanism, exerts a force, F_I, along internal surfaces 115, 117 of the cell 110. Counteracting external

forces, F_E, produced along the exterior surfaces 111, 113 of the cell 110 result in the generation of compressive forces distributed fairly evenly across the external surfaces 111, 113 and internal surfaces 115, 117 of the cell 110. It is noted that the externally produced force, F_E, exerted on the exterior surfaces 111, 113 of the cell 110 may be produced by a stationary structure, such as a wall of a containment vessel, or through use of an active pressure generating mechanism, such as a flat foam element or a flat spring-like apparatus.

A pressure generating apparatus 112 employed within the cell 110 should maintain an evenly distributed pressure along the inner surfaces 115, 117 of the cell 110 ranging between approximately 5 and 100 psi during charge/discharge cycling. This force, F_I, may be maintained at a constant magnitude or varied in magnitude within a range of approximately 5 to 100 psi.

In Figs. 6A-6C there is illustrated in cross-section various embodiments of a spring element which may be employed to produce internal or external compressive forces within an electrochemical cell. In one embodiment, a thin-film electrochemical cell, such as that illustrated in Fig. 1, may be wound about a core element 130 which includes a flexible metal member 132 constrained between two thin metal plates 130, as is shown in Fig. 6A. The use of a metal core element 130 provides for consistency in shape and performance over time, since such a structure is substantially immune to mechanical creep.

Use of an elastomeric core element, in accordance with another embodiment, offers advantages of simplicity in fabrication, volume efficiency in cell packaging configuration, improved pressure distribution, and relatively low material costs. Employing a force

generating element within a thin-film electrochemical cell which is subject to volumetric changes during charge/discharge cycling advantageously minimizes positional shifting of the cell during such cycling. Minimizing or preventing cell shifting during cycling reduces wearing of the cell and permits direct attachment of a thermal conductor between the cell and an adjacently disposed thermally conductive wall structure.

An elastomeric foam spring 134, such as that illustrated in Fig. 6B, provides for a relatively large deflection as a percentage of the spring's original size, which provides for volume and weight conservation. A foam core element 134 is initially maintained at approximately 10 to 40 percent compression with respect to its original thickness prior to winding the thin-film cell material about the core element 134 during cell fabrication. This initial state of compression produces compressive pressure within the cell that typically ranges between approximately 5 and 100 psi during volumetric variations in the cell resulting from charge/discharge cycling.

In accordance with the embodiment illustrated Fig. 6C, a micro-structured elastomeric extrusion or molded element 136 may be employed as the core element 136 of an electrochemical cell which may provide enhanced control of forces produced within or adjacent to the electrochemical cell. It is understood that other internal and external force producing mechanisms may be employed to maintain the electrochemical cell in a state of compression during charge and discharge cycling, and that the core elements 136 may instead be situated between all or selected cells. For example, the spring elements shown in Figs. 6A-6C may be

configured as a flat spring which may be disposed between an electrochemical cell and a stationary wall structure.

In Figs. 7 and 8, there is illustrated in graphical form a characterization of the state of charge (SOC) of a cell and the percentage of cell compression as a function of pressure, respectively. The data characterized in graphical form in Figs. 7 and 8 were obtained using a silicone foam element, having a thickness of approximately 0.8 mm, inserted in the core of a thin-film electrochemical cell. The overall thickness of the electrochemical cell including the foam insert is 5.86 mm. The graph of Fig. 7 demonstrates that the foam core element is subject to between approximately 10 to 40 percent compression with respect to its original thickness as the state of charge of the cell is varied between 0% and 100%, respectively. Figure 8 demonstrates that the foam core element produces corresponding internal compressive forces varying between approximately 10 to 35 psi.

A number of electrochemical cells may be arranged in a stack configuration and interconnected to form larger power producing energy storage devices, such as modules and batteries for example. A grouping of electrochemical cells may be selectively interconnected in a parallel and/or series relationship to achieve a desired voltage and current rating. For example, and with reference to Fig. 9, a number of electrochemical cells 140 may be grouped together and connected in parallel to common positive and negative power buses or terminals to form a cell pack 142. A number of the electrochemical cell packs 142 may then be connected in series to form a module 144. Further, a number of

individual modules 144 may be connected in series to constitute a battery 146.

For purposes of illustration, the embodiment shown in Fig. 10 depicts an arrangement of electrochemical cells in accordance with a modular packaging approach which provides an efficient means of achieving desired power requirements for a broad range of high-power applications. In this illustrative embodiment, eight electrochemical cells 140 are grouped together and connected in parallel to form a cell pack 142. A module 144 is constituted by grouping six cell packs 142 together and connecting the packs 142 in series. A battery 146, such as that depicted in Fig. 9, may be constructed using 24 modules 144 connected in series.

Given these arrangements, and assuming that each of the electrochemical cells 140 has dimensions and characteristics equivalent to those depicted in Fig. 3, each individual cell 140 provides for a total energy output of approximately 36.5 Wh. Each cell pack 142 provides for a total energy output of approximately 292 Wh, while each module 144 provides for a total energy output of 1.75 kWh. A battery 146, constituted by 24 series connected modules 144, provides for a total energy output of approximately 42 kWh. It is understood that the arrangement of electrochemical cells 140 and interconnection of cells 140 forming a cell pack 142, module 144, and battery 146 may vary from the arrangements illustrated in Figs. 9-10.

In order to accommodate variations in cell volume resulting from charge and discharge cycling of a grouping of cells, and to improve the performance of the cells, a pressure producing apparatus is employed to maintain the cells in a continuous state of compression.

With reference to Fig. 11, a number of electrochemical cells 150, two of which are shown in Fig. 11, may be arranged in a stack configuration and subjected to an external force, F_E, to place the cells 150 in compression. Each of the cells 150 includes two opposing surfaces 152 having a large surface area relative to the surface area of the four edges of the cell 150. The magnitude of the external force, F_E, ranges between 5 and 100 psi for individual cell 150. For a stack of 48 cells, for example, an external force, F_E, to maintain the cell stack in a state of compression during charge/discharge cycling ranges from between approximately 5 and 100 psi. It is understood that the external force, F_E, may be maintained at a constant magnitude, such as 20 psi for example, or may vary between a minimum and a maximum value during cell cycling. Further, the external force, F_E, may be produced by contact between an end cell of the cell stack and an active pressure generating mechanism while the opposing end cell of the cell stack is restricted from movement by a stationary structure. Alternatively, an active pressure generating mechanism may be employed at opposing end cells of the cell stack.

Referring to the embodiment illustrated in Fig. 12, one or more of the electrochemical cells 154 constituting a cell stack may be configured to include a central core element 156 which produces a force, F_I, within the cell 154. The core element 156, which may include a foam or spring mechanism, exerts a force, F_I, along internal surfaces 160 of the cell 154. Counteracting external forces, F_E, produced along the exterior surfaces 162 of the cell 154 results in generation of compressive forces distributed fairly

evenly across the large surfaces 162, 160 of the cells 154.

It is noted that the externally produced force, F_E, exerted on the exterior surfaces 162 of the two end cells 154 of the cell stack may be produced by a stationary structure, such as a wall of a containment vessel, or by use of an active pressure generating mechanism, such as a foam element or a spring-type apparatus adjacent the walls of containment vessel. The internal pressure generating apparatus should maintain an evenly distributed pressure along the inner surfaces 160 of the cells 154 ranging between approximately 5 and 100 psi during charge/discharge cycling. This force, F_I, may be maintained at a constant magnitude or may vary in magnitude within the above-stated range. Additionally, the stack of cells may include one or more spring inserts 158 situated between adjacent cells 154. The spring insert 158, which may include a foam, metal spring, or gas-charged pressure element, may be included within the cell stack to enhance distribution of compressive forces within the cell stack.

In Figs. 13A-13B, there is illustrated one approach to maintaining a stack of electrochemical cells 164 in a state of compression during cell charge/discharge cycling. In the configuration shown in Fig. 13A, a spring mechanism 166 is disposed adjacent one of two thrust plates 168 or containment vessel walls between which the cell stack 164 is constrained. The spring mechanism 166 exerts a compressive force on the charged cells of the cell stack 164 as is shown in Fig. 13A. During discharge, the thickness of the cells reduces by up to approximately six percent when transitioning from a fully charged state to a normal discharge state.

The spring mechanism 166, in response to the overall reduction in cell stack thickness during discharge, expands in size to apply continuous pressure on the cell stack 164. It can be appreciated that the magnitude of cell stack displacement, X_D, between the thrust plates 168 during charge/discharge cycling can be significant. By way of example, a cell stack 164 which includes 64 prismatic electrochemical cells of the type previously described with respect to Fig. 3 is subject to a cumulative displacement, X_D, of approximately 18 to 20 mm between charged and discharged states. A single spring mechanism 166, such as that shown in Fig. 13A, although providing the requisite level of compressive forces, subjects cells of the cell stack 164 to a significant degree of positional movement within a containment vessel.

In the embodiment illustrated in Figs. 14A-14B, multiple spring mechanisms are employed within the cell stack 163 to minimize displacement of the cells 161 during charge/discharge cycling. In one embodiment, a spring mechanism is incorporated into all of the cells 161 of the cell stack 163 which advantageously minimizes the positional shifting of individual cells 161 during cell cycling. Integrating a spring element within a cell 161 helps to fix the center location of the cell 161 with respect to the thrust plates 165. It is believed that incorporating a spring within each of the cells 161 will likely reduce relative cell movement within the stack 163 to zero. In general, minimizing the magnitude of cell displacement during cycling minimizes the complexity of the electrical interconnections within the cell stack 163 and increases the reliability and useful-life of the cell stack 163 over time.

Referring to Fig. 15, there is illustrated an embodiment of a pressure apparatus for maintaining a stack 172 of electrochemical cells 174, having a prismatic configuration, in a state of compression within a module housing or other containment vessel. In accordance with this embodiment, pressure is distributed fairly evenly throughout the cell stack 172 by cooperative use of one or more straps 178, opposing thrust plates 176, and flat springs 173 disposed between adjacent electrochemical cells 174. The thrust plates 176, which are retained by the straps 178, maintain compression of the flat springs 173 distributed within the stack of cells 172. It is noted that the flat springs 173 may be situated between each of the cells as is shown in Fig. 15, or may alternatively be selectively placed between non-adjacent cells, such as between every second or third cell for example. Reducing the number of flat springs 173 within the cell stack 172, however, will result in increased cell displacement during charge/discharge cycling.

In another embodiment, the flat springs 173 may be fabricated from thermally conductive foam to enhance the transfer of thermal energy between adjacent cells. A flat foam spring 173 may be impregnated with thermally conductive particles, such as copper, aluminum or silver particles, for example, such that the density of particles enhances thermal conductivity, yet provides good electrical insulation between adjacently disposed cells. Also, a heating element, such as a thin Kapton or silicone etched foil type heating element, may be incorporated within the foam flat spring 173 to supply thermal energy to the cells when necessary, such as following a power shut-down or idle period. A suitable heating element for use in this application may have a

thickness ranging between approximately 0.005 inches to approximately 0.035 inches.

The pressure system illustrated in Fig. 15 provides for the continuous application of compressive forces within the cell stack 172 during cell cycling. It is considered desirable that the magnitude of the compressive forces within the cell stack 172 be maintained at varying or constant levels ranging between approximately 5 and 100 psi. Further, overall module performance is improved by distributing the requisite pressure fairly evenly across the large side surfaces of the cells with no greater variation than approximately 10 psi over the surface of application. It is noted that the cell stack portion of the module 170 shown in Fig. 15 may be constrained by supporting walls of a containment vessel, such as an inner shell of a module housing. In a configuration in which the thrust plates 176 abut the walls of a containment vessel, the straps 178 need not be included for purposes of limiting the displacement of the opposing thrust plates 170 resulting from increases in cell volume during charging.

Figure 16 illustrates an embodiment of a strap apparatus 180 which is particularly useful in constraining a number of electrochemical cells configured as a stack or bundle. In contrast to a strap apparatus which is substantially non-extendible in its length, the strap apparatus shown in Fig. 16 incorporates a unique clamp 182 which significantly enhances the efficacy of a cell stack pressure system. The strap apparatus includes two bands 180 each having C-shaped ends 181. A clamp 182 is attached to a band 180 by coupling the C-shaped ends 181 of the band 180 with corresponding C-shaped ends 184 of the clamp 182. It is assumed that the bands 180 are disposed around the

stack of cells in a manner as shown in Fig. 15. The clamp 182 includes a hinge 186 integral to the clamp 182 which is collapsible onto a contact surface 188 of the clamp 182 when subjected to sufficient force.

When the hinge 186 is collapsed onto the contact surface 188, the C-shaped ends 184 of the clamp 182 are pulled towards each other which, in turn, produces a tensile force in the C-shaped ends of the bands 180. The magnitude of the tensile force induced in the bands 180 by actuation of the clamps 182 is moderated by a sine wave-shaped spring 189 integral to the clamps 182. The sine wave-shaped spring 189 may be configured, in terms of shape, thickness, and material, to provide for a desired amount of expansion and retraction of the strap apparatus during charge/discharge cycling of the cells.

In a configuration in which a cell stack retained by use of the strap apparatus shown in Fig. 16 is placed within a containment vessel, such as the inner shell of an energy storage module housing, contact between the hinge 186 of the clamp 182 and a wall of the containment vessel ensures that the hinge 186 is maintained in the collapsed configuration.

In general, an effective pressure system for producing compressive forces within a stack of electrochemical cells must continuously induce pressure on the cells during charge/discharge cycling. Ideally, it would be desirable that the compressive forces developed within the cell stack remain at a constant level during cell cycling. It is understood, however, that the force required to compress a spring mechanism increases as a function of increasing strain. Notwithstanding this physical precept, the rate at which

the strain of a spring mechanism increases in response to increasing force can be altered.

By way of example, lengthening a spring results in reducing the relative strain induced in the spring. In a configuration in which it is desirable to employ foam spring elements and inserts within a cell stack or within individual cells, increasing the relative size of the foam spring elements has the adverse effect of increasing the overall length or size of the cell stack which, in turn, increases the volume of the module or system within which the cell stack is situated.

A pressure system which employs a strap or band surrounding the electrochemical cell stack, however, may incorporate a relatively long spring mechanism within the strap or band which advantageously reduces the relative deflection of the spring. In the embodiment illustrated in Fig. 18, a metal strap 194 includes a wave-like spring 198 which, when placed in tension, causes the thrust plates 194 to exert compressive forces on the cell stack 192. In accordance with this configuration, the mechanism that generates compressive forces within the cell stack 192 is situated outside, rather than within, the cell stack 192. The length of the wave-like spring portion 198 of the strap 194 may be greater than, less than, or equivalent to the length of the cell stack 192.

The relatively long spring length of the strap apparatus illustrated in Fig. 18 results in a dramatic reduction in the relative deflection of the spring. Accordingly, the relative strain of the spring 198 is significantly reduced, as is the undesirable pressure buildup in the spring mechanism as the cell stack expands in size while charging. It is understood that

the tension spring apparatus illustrated in Fig. 18 may be implemented using a number of coil springs or using elastomeric material, and that a combination of metallic and elastomeric spring materials may also be advantageously employed. Further, it will be appreciated that foam or other spring elements may be incorporated within the cell stack and/or within individual cells in combination with a tension spring apparatus external to the cell stack.

The graph provided in Fig. 19 illustrates a relationship between pressure and cell compression when a wave spring apparatus, such as that shown in Fig. 18, is employed for producing pressure within a stack of prismatic electrochemical cells of the type shown in Fig. 3. The wave spring apparatus was employed in a test module constituted by eight cell packs, each of which includes eight electrochemical cells for a total of 64 cells. The data reflected in Fig. 19 represents pressure and compression measurements obtained from cell packs #3 and cell #6 within the stack of eight cell packs.

Each of the cells had an average full charge thickness of approximately 5.55 mm and was subject to thickness variations of approximately 0.31 to 0.33 mm (0.31 mm x 64 cells/module = 19.84 mm total) during charge/discharge cycling at an ambient temperature of approximately 80° C. The duration of the charge cycles was 6 hours. The duration of the discharge cycles was also 6 hours. It can be seen that the pressure developed within the cell stack is quite uniform with respect to cell position, and varies between approximately 20 and 60 psig during charge/discharge cycling.

In some applications, the effects or presence of cell displacement during cell cycling may be tolerated. In such cases, a simplified pressure system having fewer or less complex spring mechanisms would appear to be advantageous from an assembly, cost, and reliability perspective. In Figs. 20 and 21, there is illustrated an embodiment of a pressure system that includes a leaf spring mechanism 200 which provides the requisite level of compressive force on an electrochemical cell stack 201. The leaf spring mechanism 200 includes a thrust plate 204 adjacent an end cell of the cell stack 201 and a spring element 202 adjacent to the thrust plate 204. The ends of the spring element 202 abut a wall 206 of a containment vessel such that the leaf spring mechanism 200 is situated between the containment vessel wall 206 and the cell stack 201.

In one embodiment, the thrust plate 204 includes a contact plate having a surface area of approximately 130 mm x 130 mm, which is approximately the surface area of the large side surface of the cells of the cell stack 201 shown in Figs. 20-21. The illustration of Fig. 20 depicts the cell stack 201 in a fully discharged state, with the leaf spring mechanism 200 exerting approximately 65 psi of pressure over an active surface area of approximately 26.2 in^2. It is noted that the cell stack 201 as illustrated includes 64 individual electrochemical cells, and that the cell stack 201 is subject to overall displacement of approximately 18 to 20 mm during cell cycling. This displacement may be reduced by approximately 50% by deploying a leaf spring mechanism 200 at each end of the cell stack 201.

The depiction of Fig. 21 shows the electrochemical cell stack 201 in a fully charged state which, while charging, causes the spring element 202 to collapse into the containment vessel wall 206. In this configuration, the leaf spring mechanism 200 exerts approximately 85 psi of pressure on the cell stack 201. It is noted that the spring element 202 of the leaf spring mechanism 200 may include a single spring, multiple nested springs, or a braided spring, for example. Further, the thrust plate 204 need not be a solid member, but may include a number of perforations to reduce the mass of the thrust plate 204. Further, an elastic band or metal wave-type spring may be incorporated so as to encompass the cell stack 201 and the thrust plate 204.

Referring to Figs. 22A-22C, there is illustrated another embodiment of a pressure system including a leaf spring mechanism 220 which employs a nested spring 222. The leaf spring mechanism 220 further includes a thrust plate 224 which, as is best shown in Fig. 22C, includes a number of ribs 229, wherein a channel is defined between adjacently disposed ribs 229. The nested spring 222 is formed to include a number of slots 228, each of which is associated with one of the ribs 229 provided on the thrust plate 224.

The nested leaf spring mechanism 220 generates a continuous force which is exerted on the electrochemical cell stack 221 during cell charge/discharge cycling. Volumetric changes in the cell stack 221 are accommodated by slidable engagement between the slotted nested spring 222 and the ribbed and/or channeled surfaces of the thrust plate 224. It is appreciated that this slot and rib arrangement provides for reliable slidable engagement between the

nested spring 222 and the thrust plate 224 in response to positional shifting of the cells constituting the electrochemical cell stack 221.

In Fig. 23, there is illustrated another embodiment of a leaf spring mechanism which produces a continuous compressive force on a grouping of electrochemical cells. In accordance with this embodiment, a leaf spring 232 engages a thrust plate 234 and a pair of slidable pads 235 adjacent opposing ends of the leaf spring 232. The slidable pads 235 are attached to the opposing ends of the leaf spring 232 and are free to move along a surface of a shell or housing 236. Alternatively, the pads 235 may be permanently affixed to the housing wall 236, and the opposing ends of the leaf spring 232 may be formed to include a curl to facilitate sliding of the lead spring ends across the surface of the affixed pads 235. In this configuration, the leaf spring mechanism 230 generates the requisite compressive forces on the cell stack without the use of elastic or spring-type straps. It is, however, understood that elastic or otherwise resilient straps may be employed in combination with the leaf spring mechanism 230 shown in Fig. 23.

In the embodiment of the leaf spring mechanism 240 shown in Fig. 24, a pair of straps 243 extend from opposing ends of a leaf spring 242 and encompass a thrust plate 244 and a stack of electrochemical cells. In this configuration, the opposing ends of the leaf spring 242 need not contact a surface of the shell or housing 246. The leaf spring 242 places the straps 243 in tension, which causes the pair of opposing thrust plates 244 to exert compressive forces on the cell stack. The curvature or bowing of the leaf spring 242 changes in response to volumetric changes within the

cell stack, resulting in a concomitant alteration in spring force produced by the leaf spring 242.

In Fig. 25A, there is illustrated an embodiment of a dual leaf spring mechanism 250 which is typically disposed on one or both ends of a cell stack, but may also or alternatively be disposed within the stack of electrochemical cells. In accordance with this embodiment, the opposing ends of two leaf springs 252 are coupled together, and the center-point of each leaf spring 252 contacts a thrust plate 254. One of the thrust plates 254 contacts the stack of electrochemical cells, while the other thrust plate 254 is connected to a pair of straps 253 which encompass the cell stack. In this configuration, the pair of leaf springs 252 cooperate in tandem to maintain the stack of electrochemical cells in a continuous state of compression. It is understood that the dual leaf spring mechanism 250 may be employed exclusive of the straps 253.

The embodiment of a multiple-leaf spring mechanism 280 shown in Fig. 25B includes a pair of leaf springs 282 arranged in a back-to-back relationship which are coupled together at the center-point of the leaf springs 282. The opposing ends of a first leaf spring 282 contact opposing ends of a thrust plate 284, while the opposing ends of a second lead spring 282 contact a second thrust plate 284. In this embodiment, a pair of straps 283 are attached to, or attached around, the first thrust plate 282 and encompass the cells. The second thrust plate 284 contacts the cell stack so as to place the cells in a continuous state of compression. It is understood that a leaf spring, such as the first leaf spring 282, may comprise an individual leaf spring or a set of leaf springs.

Turning now to Figs. 26A-26B, there is shown an embodiment of a force-generating apparatus which includes a thrust plate 260 to which a number of Belleville springs or washers are affixed. The Belleville springs 262 may be affixed to the thrust plate 260 by use of an adhesive, such as an epoxy adhesive. The thrust plate 260 may be inserted between a wall structure of a containment vessel and a contact plate which engages the stack of electrochemical cells. One or more Belleville spring-loaded thrust plates 260 may be installed with a contact plate disposed on either side of the thrust plate 260 at various locations within the cell stack.

In the embodiment illustrated in Figs. 27A-27C, a number of serpentine-type springs 274 may be installed on a thrust plate 270. Various types of springs 274 may be employed, including a wave spring 274a, which is shown in Fig. 27B and typically fabricated from steel ribbon, and a coil spring 274b, which is shown in Fig. 27C and typically fabricated from steel wire. A contact plate 272 engages a stack of thin-film cells on a first surface, and also engages the spring-loaded thrust plate 270 on an opposing second surface. Continuous compressive forces are generated by cooperative operation between the individual springs 274 and the contact plate 272 in the presence of positional shifting of the cell stack.

Figs. 28A-28C illustrate various embodiments of a bellows-type mechanism which may be employed to produce continuous and constant compressive forces for maintaining a stack of electrochemical cells in a state of compression. The bellows shown in Figs. 28A-28C are typically filled with a gas or a liquid that changes phase in response to variations in pressure and/or

temperature. A liquid-type bellows mechanism generates a force when the fluid contained within the bellows changes from a liquid phase to a gas phase. This type of bellows mechanism may be employed to generate a relatively constant pressure on the stack of cells over the entire range of cell volume variation during charge/discharge cycling. The fluid inside the bellows condenses and evaporates as the bellows is compressed and relaxed, respectively.

In accordance with another embodiment, the stack of electrochemical cells contained within a sealed shell or housing may be placed in a state of compression by pressurizing the housing. The housing, or one or more sealed chambers within the housing, may be pressurized with an inert gas, such as nitrogen or argon, for the purpose of placing the cells in compression. The pressure of the gas-filled housing may be held constant or varied during cell cycling.

It will, of course, be understood that modifications and additions can be made to the various embodiments discussed hereinabove without departing from the scope or spirit of the present invention. By way of example, a thin elastomeric coating may be provided on the surface of various layers of a thin-film cell prior to winding, rolling, or otherwise forming the electrochemical cell for purposes of producing the requisite internal compressive forces within the cell. Also, a gas charged element may be employed as a spring member and incorporated into the core element of an electrochemical cell or a separate flat spring structure external to the cell. It is further understood that the principles of the present invention may be employed in battery technologies other than those exploiting lithium polymer electrolytes, such as those employing nickel

metal hydride (Ni-MH), lithium-ion, (Li-Ion), and other high energy battery technologies. Accordingly, the scope of the present invention should not be limited by the particular embodiments discussed above, but should be defined only by the claims set forth below and equivalents thereof.

*rB

INFORMATION COPY

CLAIMS

What we claim is:

1. A pressure system for an energy storage device, comprising:

a solid-state thin-film electrochemical cell having an anode contact and a cathode contact for conducting current into and out of the electrochemical cell, the electrochemical cell subject to volumetric changes during charge and discharge cycling of the electrochemical cell; and

a pressure apparatus, comprising a force generating core element disposed within the electrochemical cell, that maintains the electrochemical cell in a state of compression in the presence of volumetric changes of the electrochemical cell.

2. The system of claim 1, wherein the force generating core element comprises an elastomeric element.

3. The system of claim 1, wherein the force generating core element comprises one of a molded foam element, a micro-structured spring element, or a metal spring element .

4. The system of claim 1, wherein the pressure apparatus comprises:

a first plate and a second plate respectively disposed adjacent opposing side surfaces of the electrochemical cell; and

AMENDED SHEET

COPY

a spring coupled to the first and second plates for producing a force so as to maintain the electrochemical cell in the state of compression.

5. The system of claim 1, wherein the pressure apparatus comprises:

a first plate and a second plate respectively disposed adjacent opposing side surfaces of the electrochemical cell; and

an elastomeric band coupled to the first and second plates, a tensile force developed in the band so as to maintain the electrochemical cell in the state of compression.

6. The system of claim 1, wherein the pressure apparatus comprises:

a first plate and a second plate respectively disposed adjacent opposing side surfaces of the electrochemical cell; and

a band including an integral wave spring coupled to the first and second plates, a tensile force developed in the band so as to maintain the electrochemical cell in the state of compression.

7. The system of claim 1, wherein the pressure apparatus comprises:

a band disposed around the electrochemical cell; and

a clamp attached to the band which, when moved from an unclamped orientation to a clamped orientation, induces a tensile force in the band so as to maintain the electrochemical cell in the state of compression.

8. The system of claim 1, wherein the pressure apparatus comprises a housing containing the electrochemical cell and pressurized with a gas so as to

AMENDED SHEET

COPY

maintain the electrochemical cell in the state of compression.

9. The system of claim 1, wherein the pressure apparatus comprises a plate comprising a plurality of springs, the plate being disposed adjacent a side surface of the electrochemical cell and producing a force so as to maintain the electrochemical cell in the state of compression.

10. The system of claim 9, wherein the plate comprises a plurality of coil springs or a plurality of wave springs.

11. The system of claim 9, wherein the plate comprises a plurality of bellow springs.

12. The system of claim 9, wherein the plate comprises a plurality of Belleville springs.

13. The system of claim 1, wherein the pressure apparatus comprises an elastomeric coating disposed on the thin-film electrochemical cell.

14. The system of claim 1, wherein the thin-film electrochemical cell comprises a polymer electrolyte, and the pressure apparatus comprises:

a separator layer of the polymer electrolyte which exerts a force on the anode; and

a spring external to the polymer electrolyte, the separator layer and the external spring cooperating to maintain the electrochemical cell in the state of compression.

15. A pressure system for an energy storage device, comprising:

COPY

a first plate and a second plate;

a grouping of solid-state thin-film electrochemical cells disposed between the first and second plates, each of the electrochemical cells having a positive contact and a negative contact for conducting current into and out of the electrochemical cell, the electrochemical cells subject to volumetric changes during charge and discharge cycling of the electrochemical cells; and

a pressure apparatus, comprising a plurality of force generating elements each provided between adjacently positioned electrochemical cells, that cooperates with the first and second plates to maintain the grouping of electrochemical cells in a state of compression and to minimize cell displacement relative to the first and second plates during charge and discharge cycling of the electrochemical cells.

16. The system of claim 15, wherein one or more of the force generating elements comprises a spring element disposed between at least some of the electrochemical cells.

17. The system of claim 15, wherein the force generating elements comprise one of foam spring elements or metal spring elements.

18. The system of claim 15, wherein each of the force generating elements comprises a flat spring element disposed between each of the electrochemical cells.

19. The system of claim 18, wherein each of the flat spring elements comprises one of foam spring elements or metal spring elements.

20. The system of claim 15, wherein the pressure apparatus comprises

a band coupled to the first and second plates, wherein the force generating elements, the band, and the first and second plates cooperate to produce a compressive force within the grouping of electrochemical cells.

21. The system of claim 15, wherein the pressure apparatus comprises a band coupled to the first and second plates, the band including an integral spring and cooperating with the first and second plates to produce a tensile force so as to maintain the electrochemical cells in the state of compression.

22. The system of claim 15, wherein the pressure apparatus comprises:

a first band and a second band, each of the first and second bands having a first and a second opposing end; and

a first clamp and a second clamp, the first and second clamps matingly engaging respective opposing ends of the first and second bands, the first and second clamps, when moved from an unclamped orientation to a clamped orientation, inducing a tensile force in the first and second bands so as to maintain the electrochemical cells in the state of compression.

23. The system of claim 22, wherein each of the first and second clamps comprises an integral spring.

24. The system of claim 15, wherein the pressure apparatus comprises a leaf spring coupled to at least one of the first or second plates, the leaf spring cooperating with the first and second plates to produce

COMPARISON COPY

a compressive force within the grouping of electrochemical cells.

25. The system of claim 15, wherein the pressure apparatus comprises a plurality of springs disposed on one of the first plate or the second plate.

26. The system of claim 15, wherein the pressure apparatus comprises a plurality of coil springs or a plurality of wave springs disposed on one of the first plate or the second plate.

27. The system of claim 15, wherein the pressure apparatus comprises a plurality of bellow springs disposed on one of the first plate or the second plate.

28. The system of claim 15, wherein the pressure apparatus comprises a plurality of Belleville springs disposed on one of the first plate or the second plate.

29. A method of maintaining a grouping of solid-state thin-film electrochemical cells in a state of compression during charge and discharge cycling of the electrochemical cells, comprising:

conducting current into and out of the electrochemical cells, the electrochemical cells subject to volumetric changes during charge and discharge cycling of the electrochemical cells;

producing a force internally within at least some of the electrochemical cells; and

producing a force external to the electrochemical cells such that the internally and externally produced forces maintain the electrochemical cells in the state of compression and minimize displacement of the electrochemical cells during charge and discharge cycling of the electrochemical cells.

30. The method of claim 29, wherein producing the external force comprises producing a tensile force external to the electrochemical cell.

31. The method of claim 29, wherein producing the external force comprises producing a spring force external to the electrochemical cell.

32. The method of claim 29, wherein producing the internal force comprises producing a spring force internally within or between the at least some of the electrochemical cells.

33. The method of claim 29, wherein producing the external force comprises pressurizing an enclosure containing the electrochemical cells.

FIG. 1

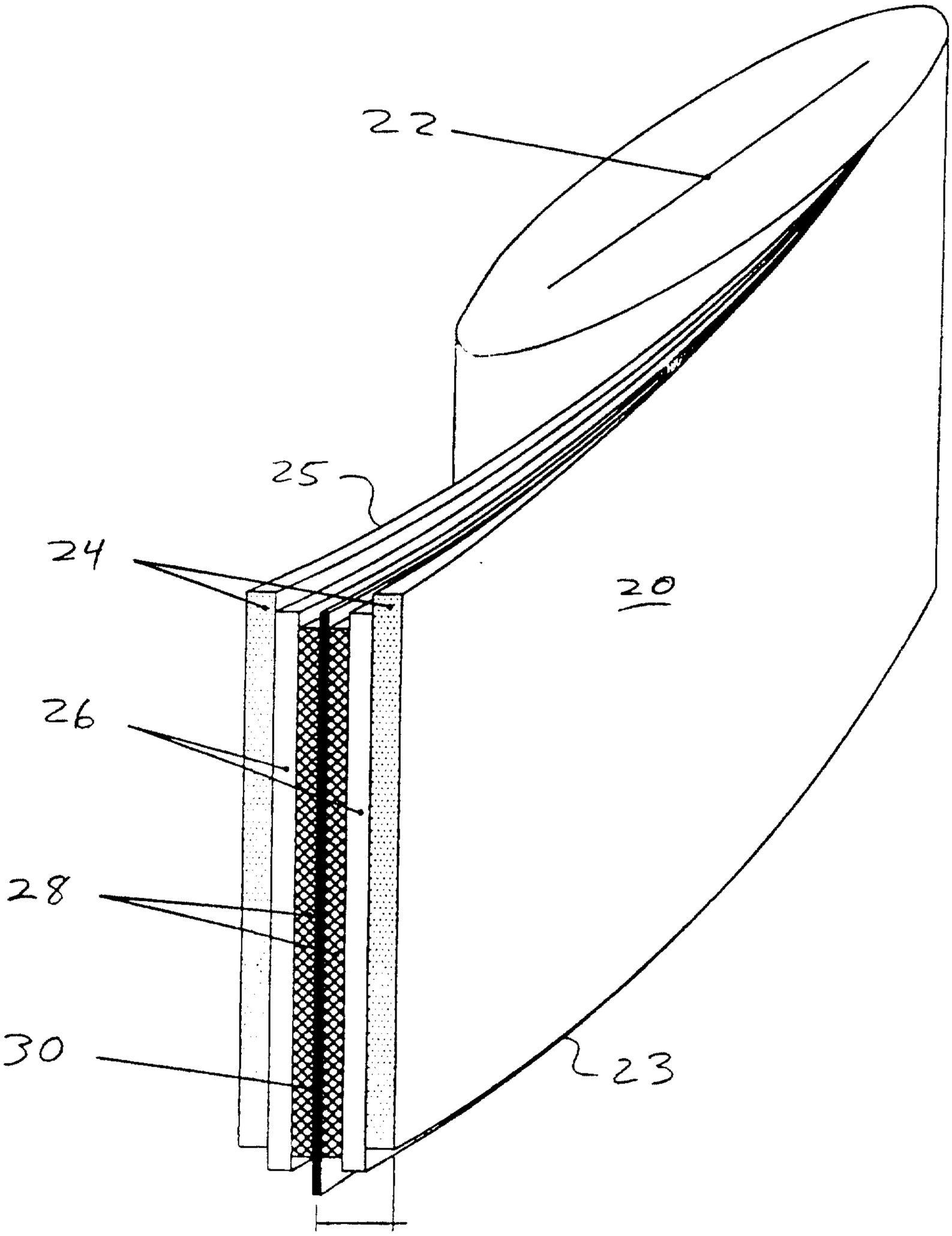

*rB

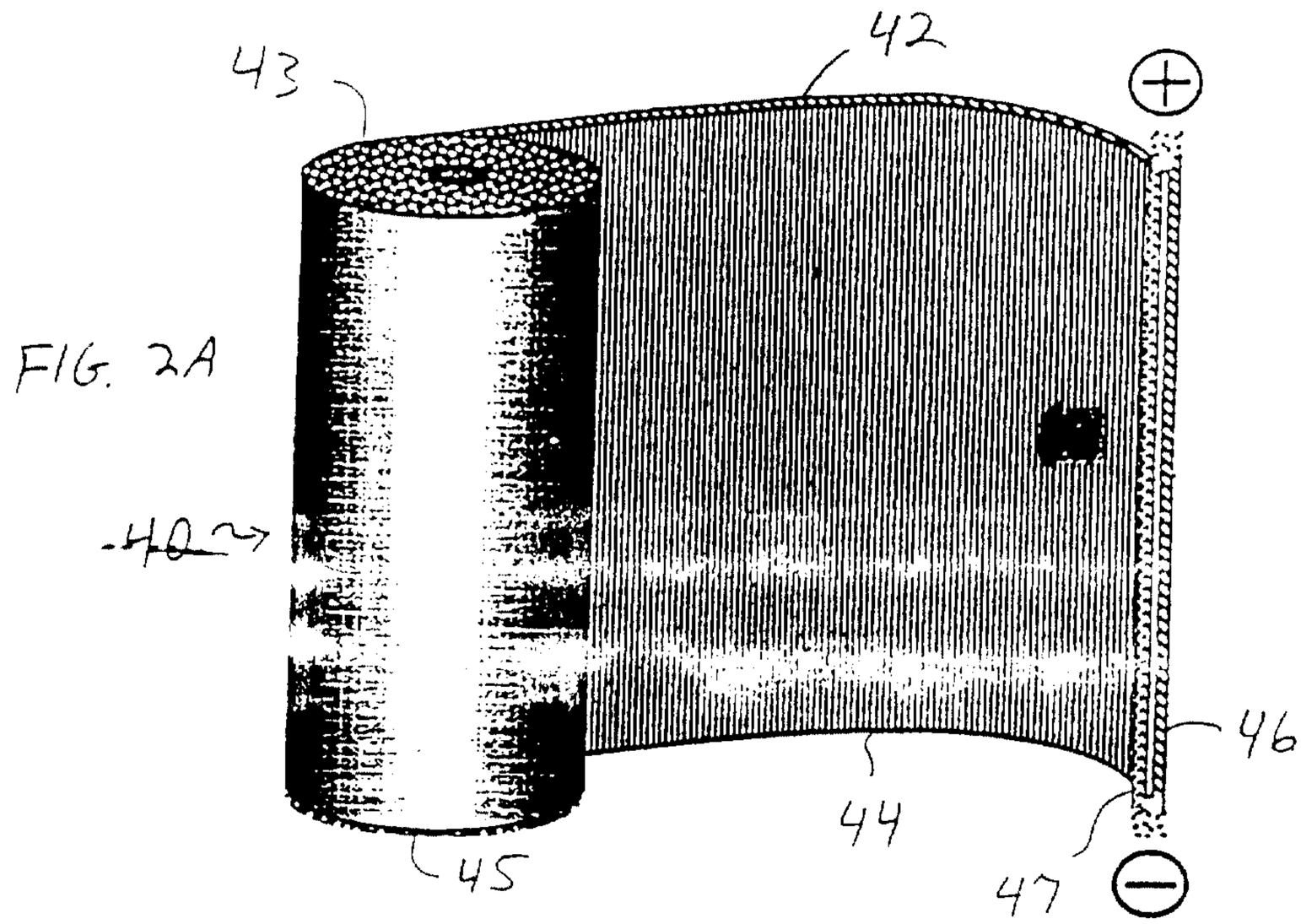

FIG. 2A

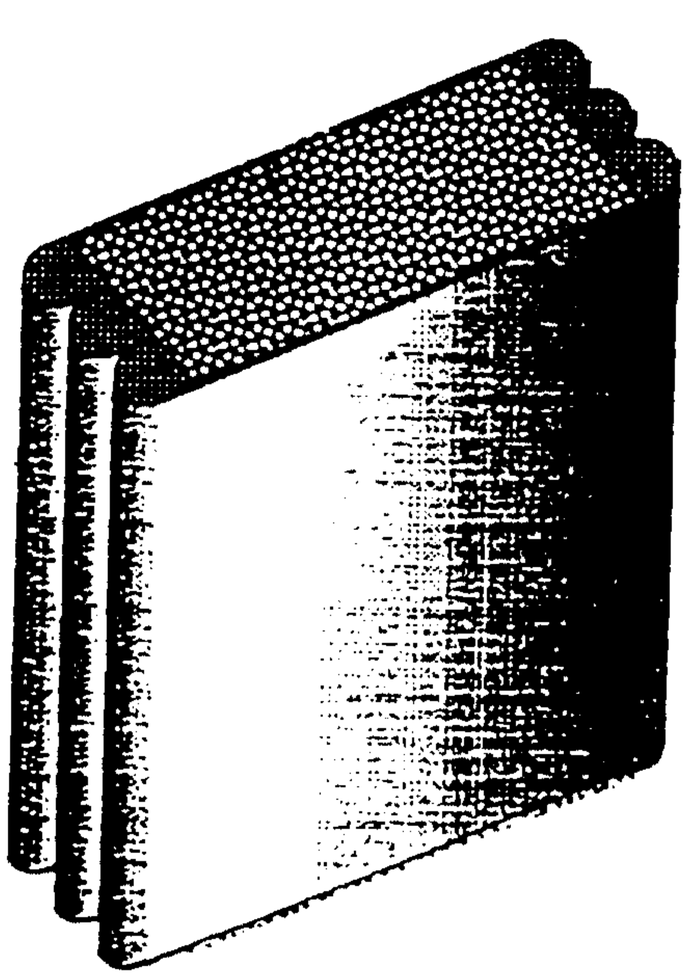

FIG. 2B

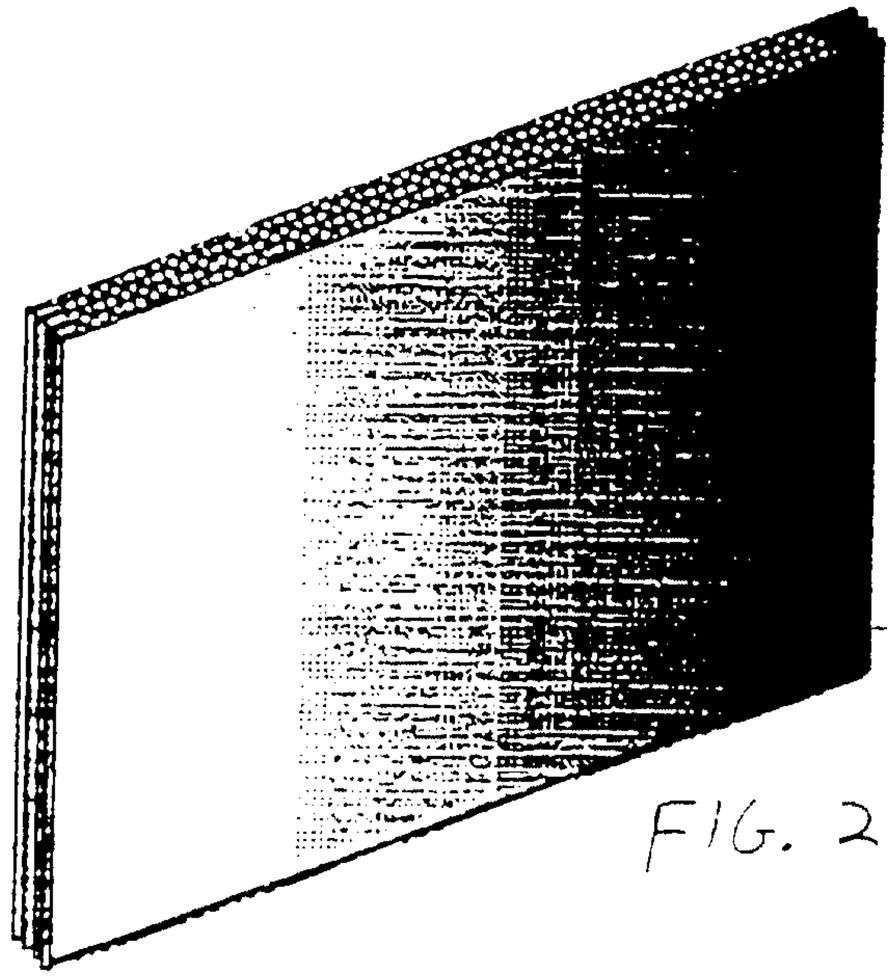

FIG. 2C

FIG. 3

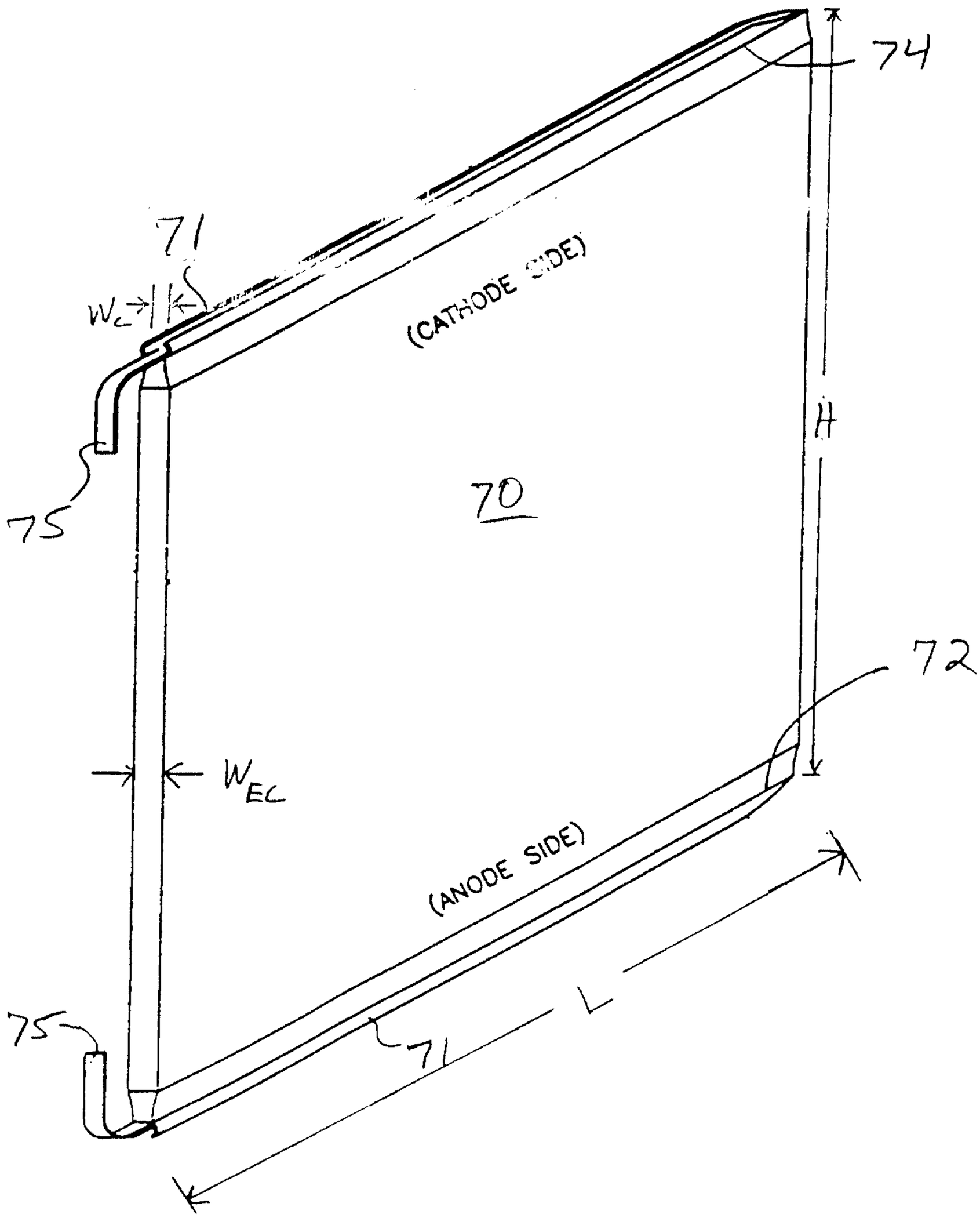

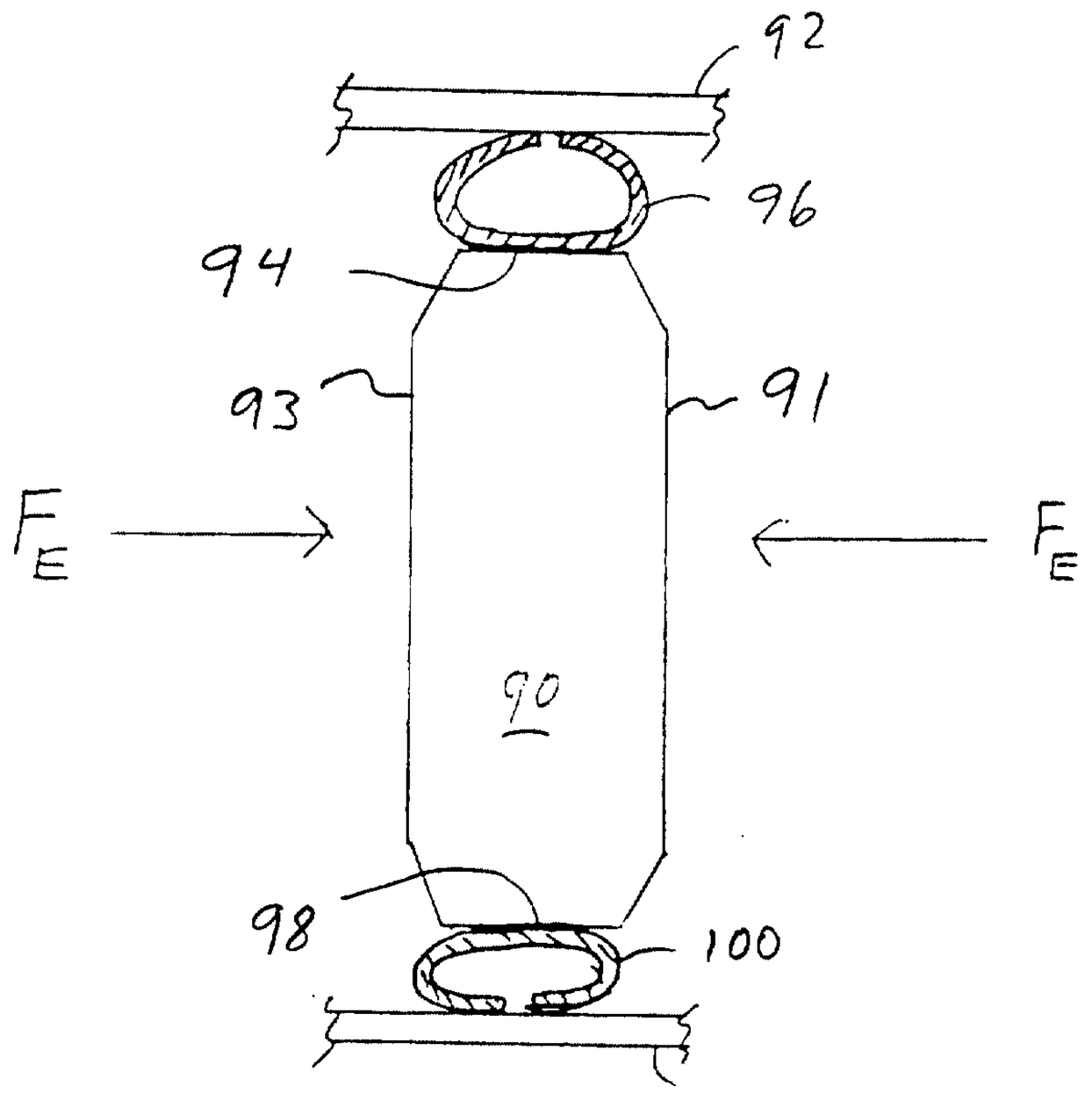
92
96
94
93
91
F_E
F_E
90
98
100
92

FIG. 4

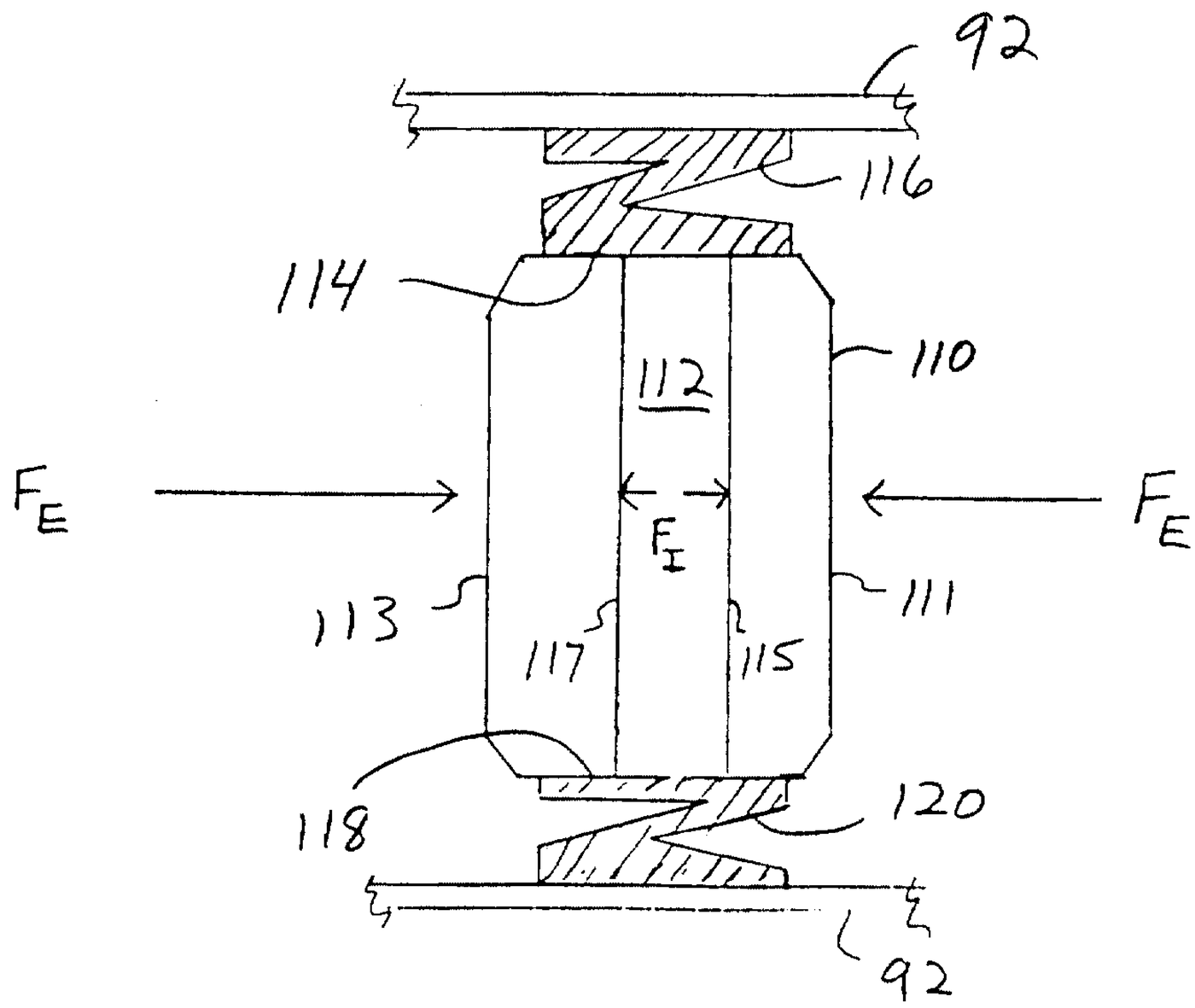
92
116
114
110
112
F_E
F_E
F_I
113
111
117
115
118
120
92

FIG. 5

Fig. 6A

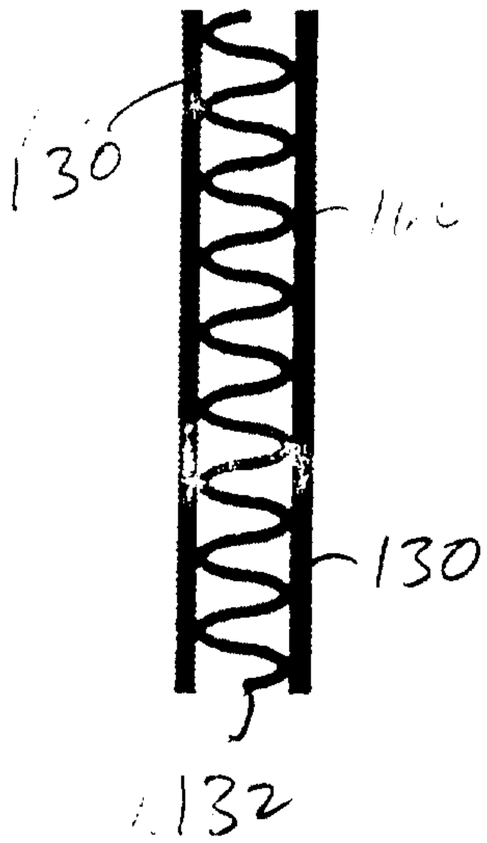

Fig. 6B

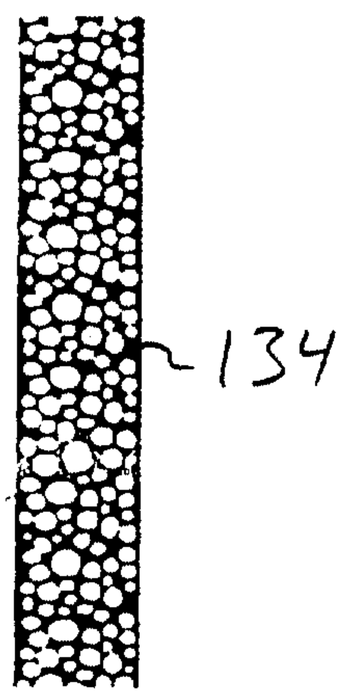

Fig. 6C

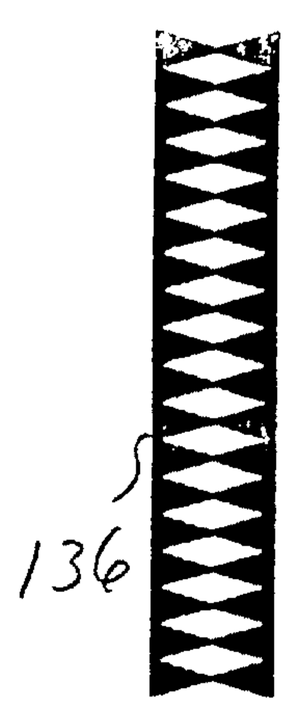

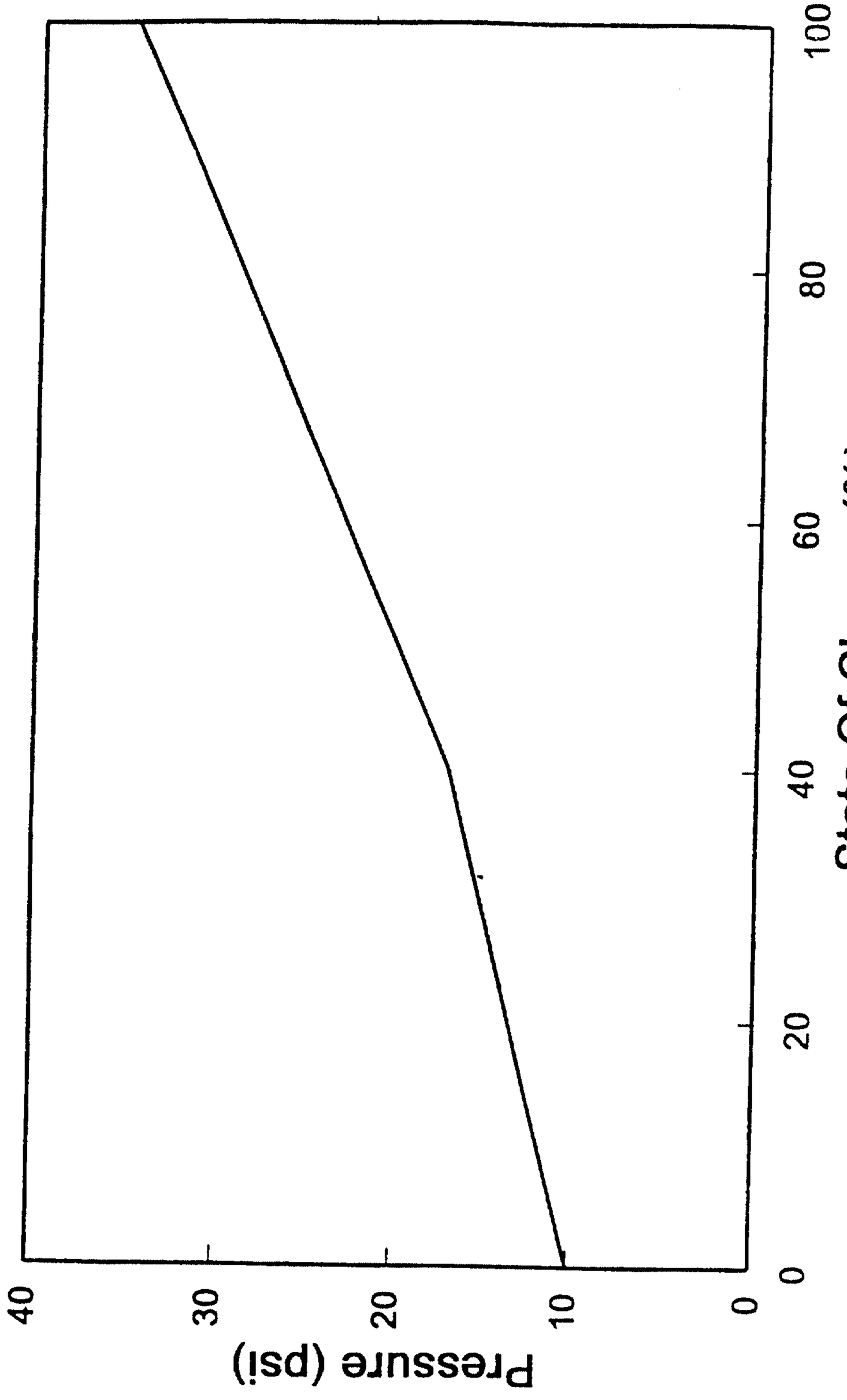

Fig. 7

Fig. 8

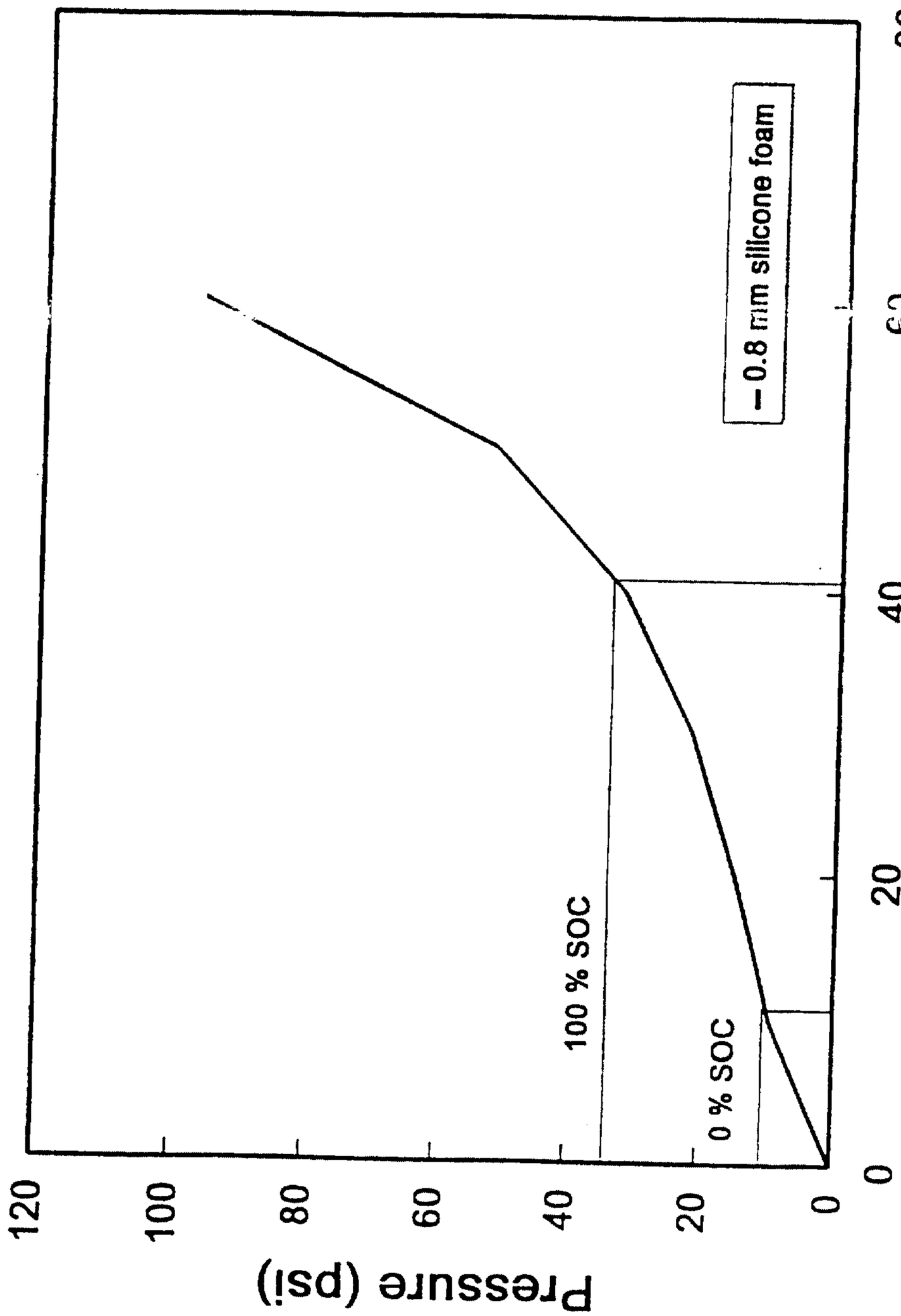
Pressure (psi)
120
100
80
60
40
20
0
Percent Compression (%)
0
20
40
60
80
0.8 mm silicone foam
100 % SOC
0 % SOC

*rB

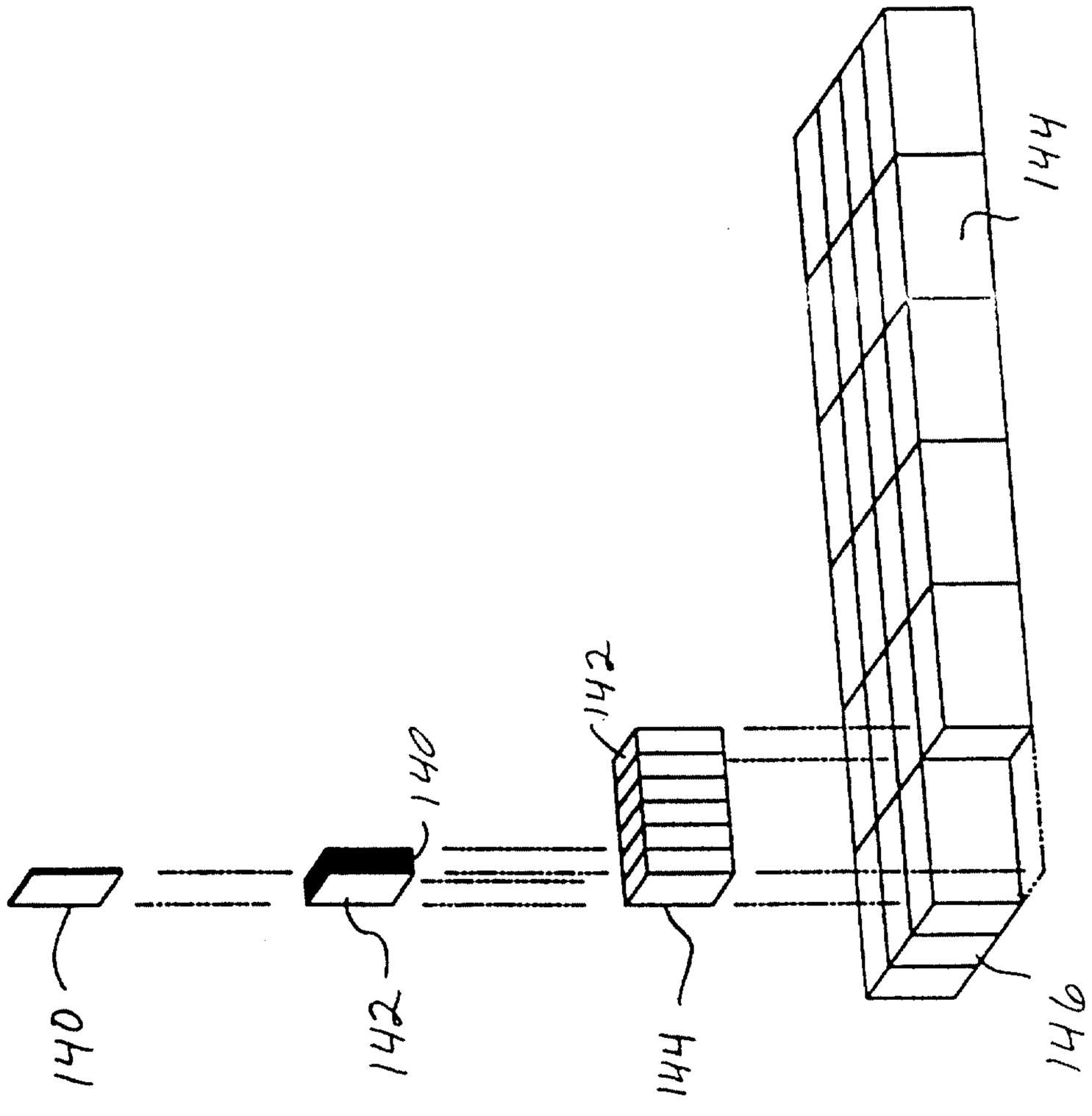

FIG. 9

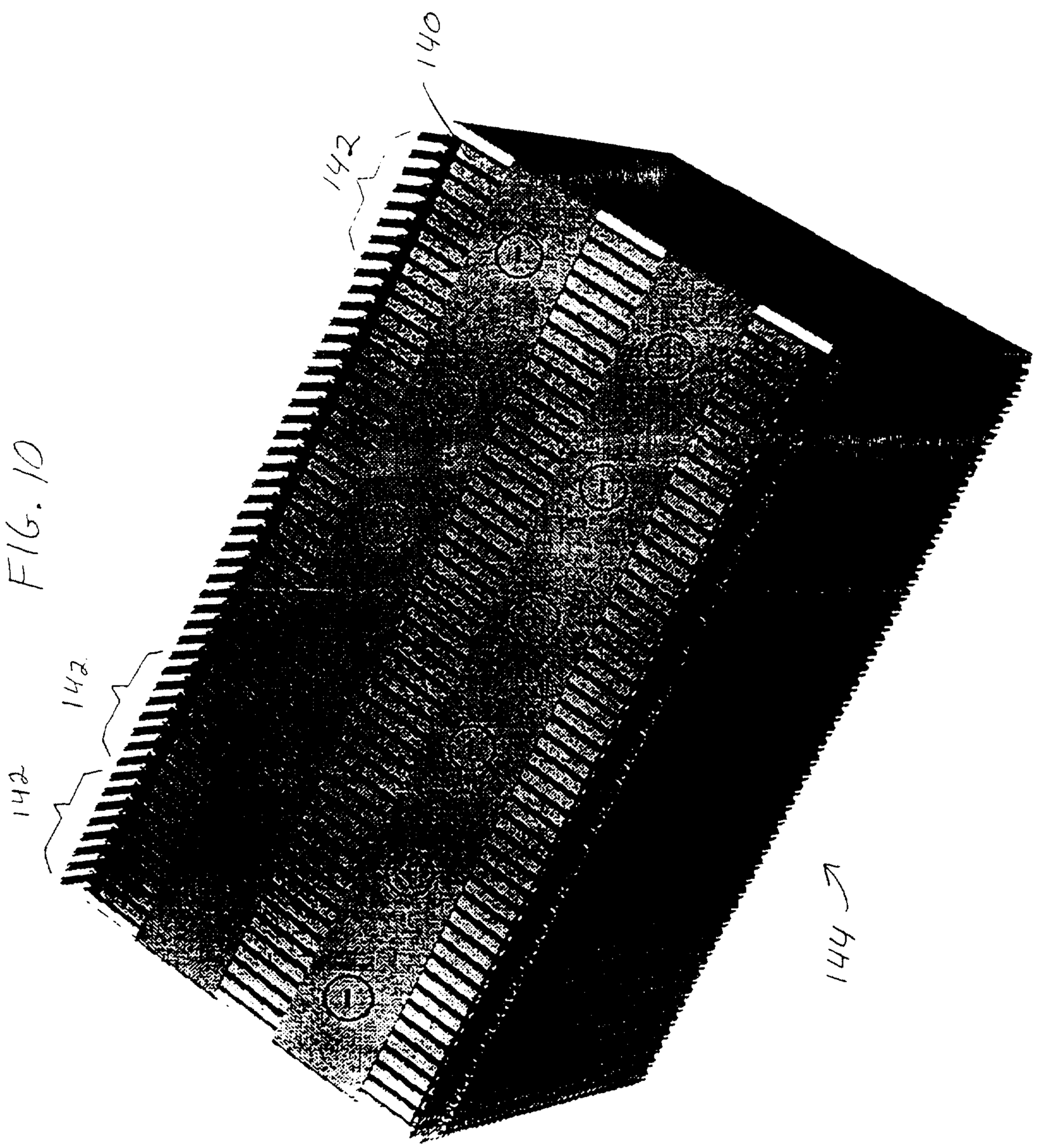

FIG. 10

FIG. 11

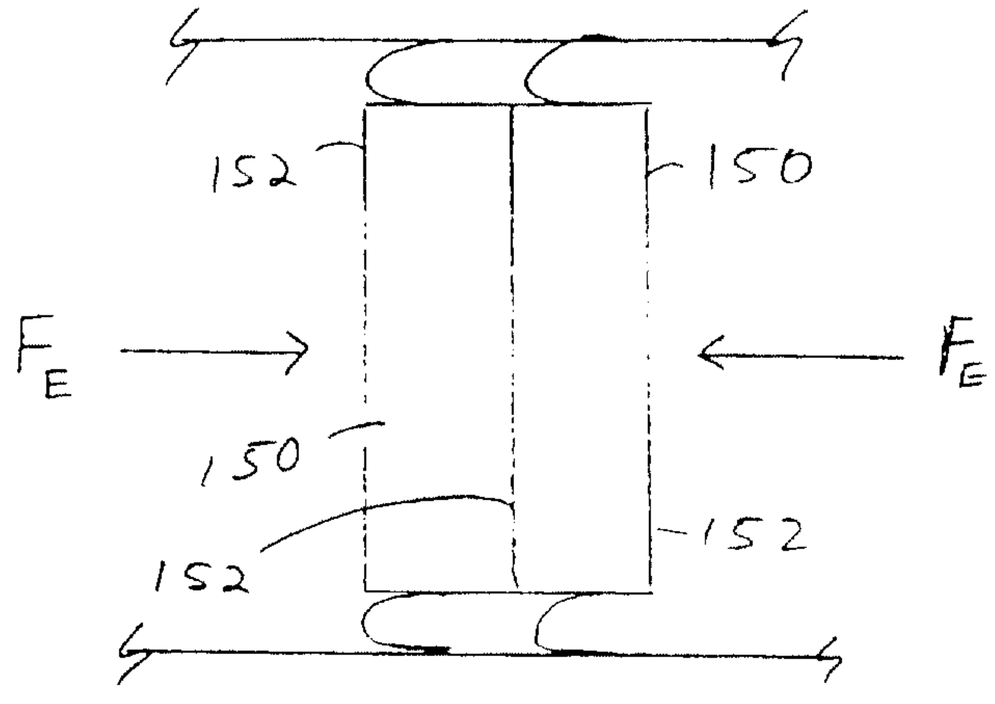

FIG. 12

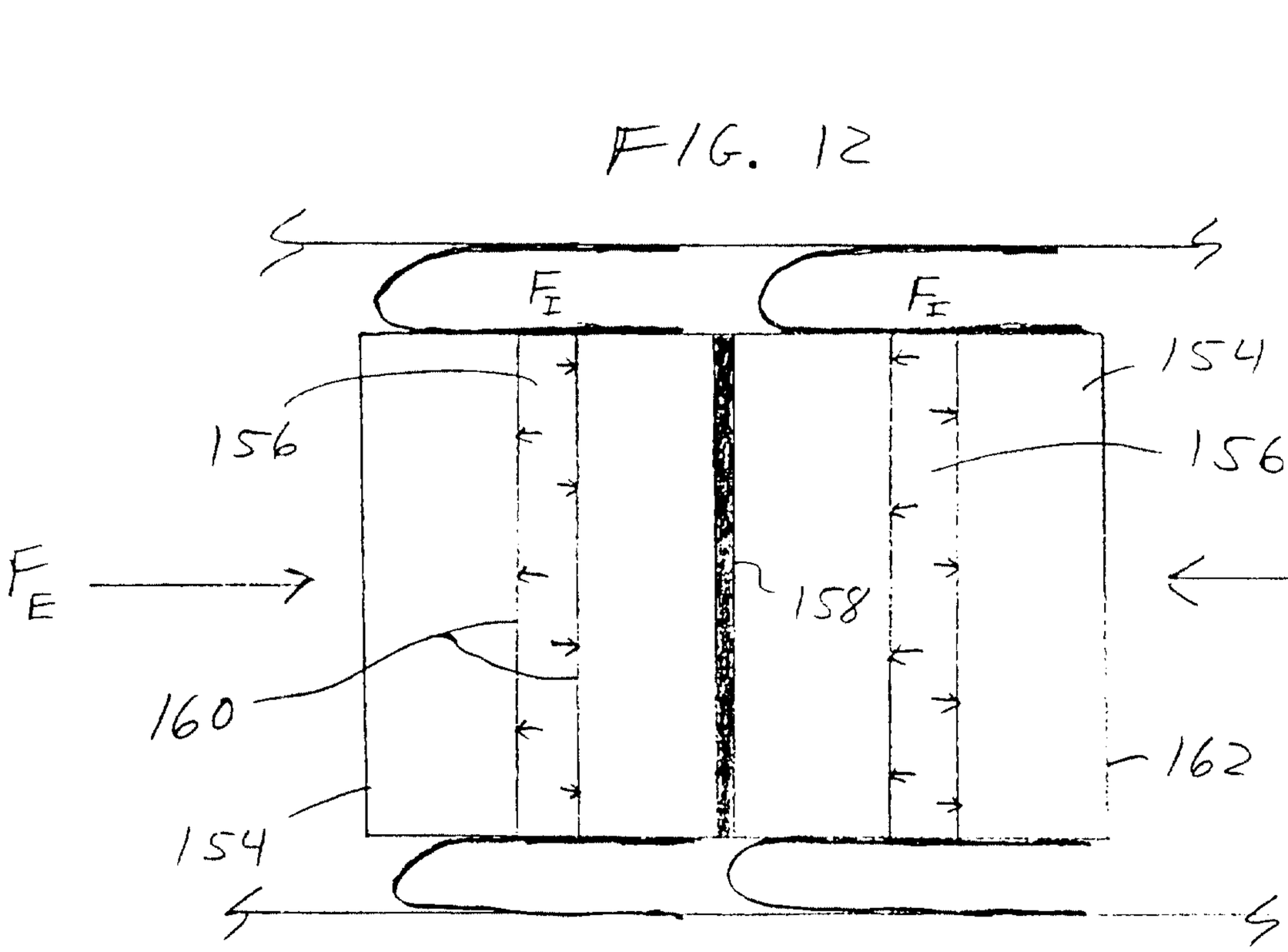

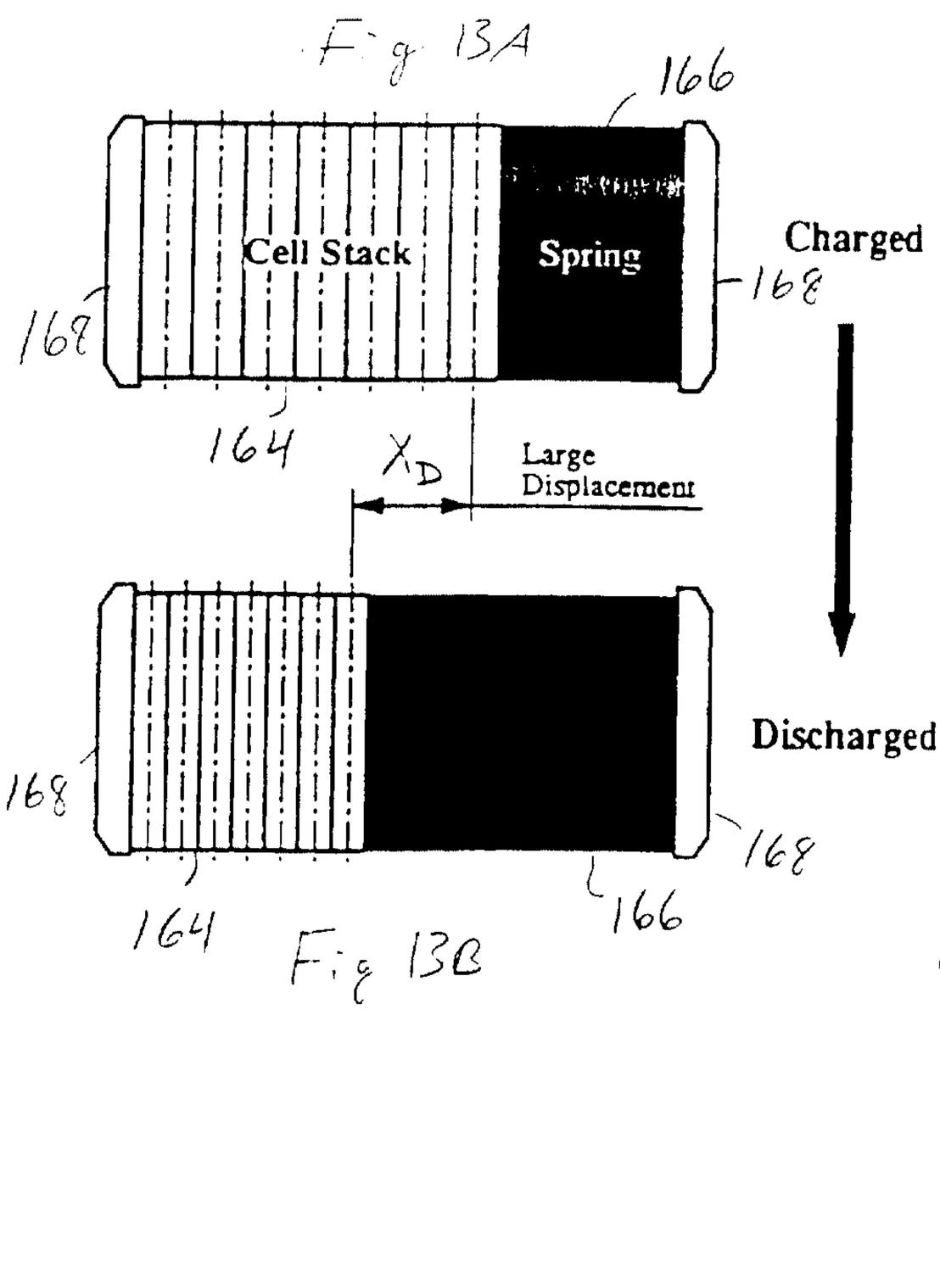

Fig 13A

Fig 13B

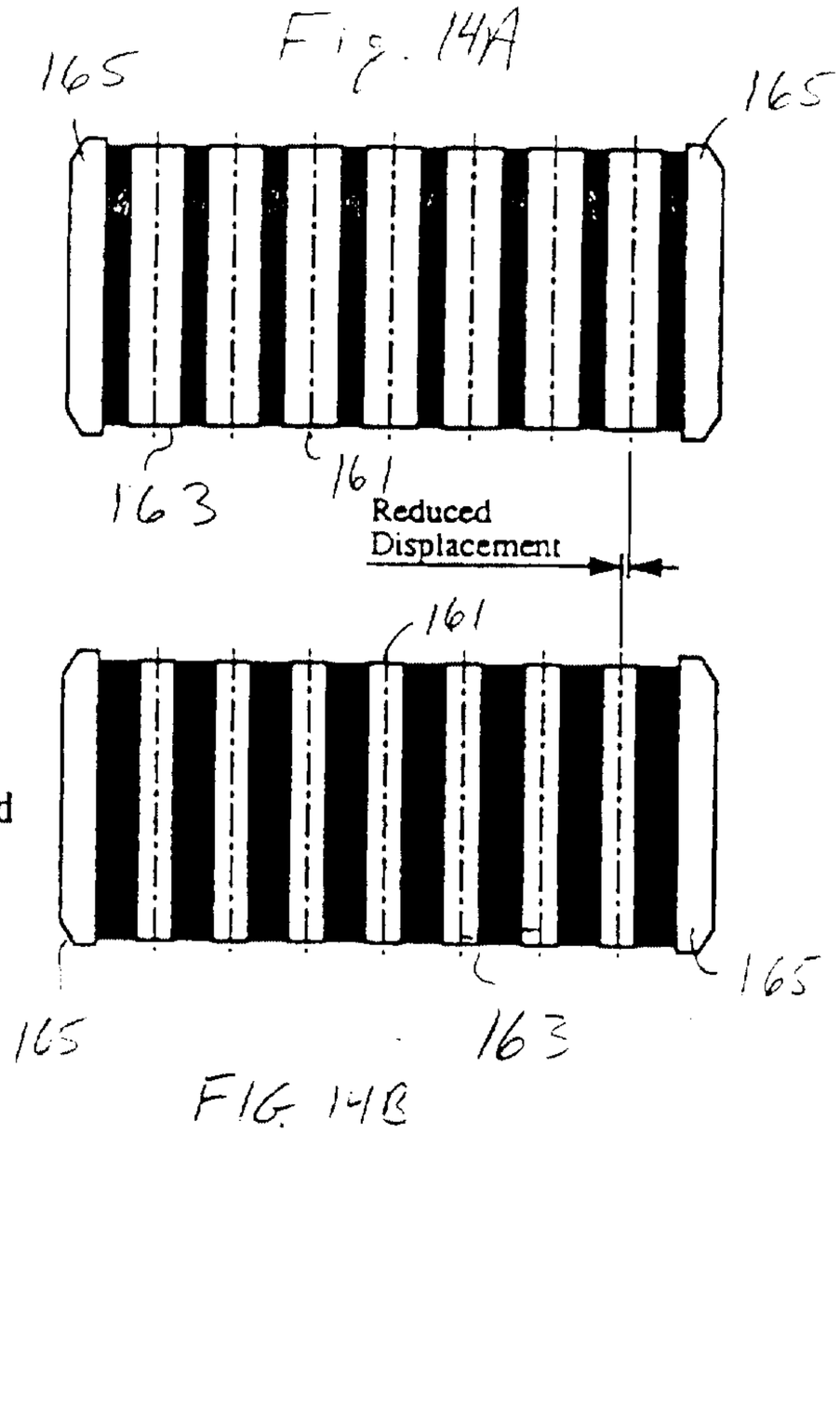

Fig 14A

FIG 14B

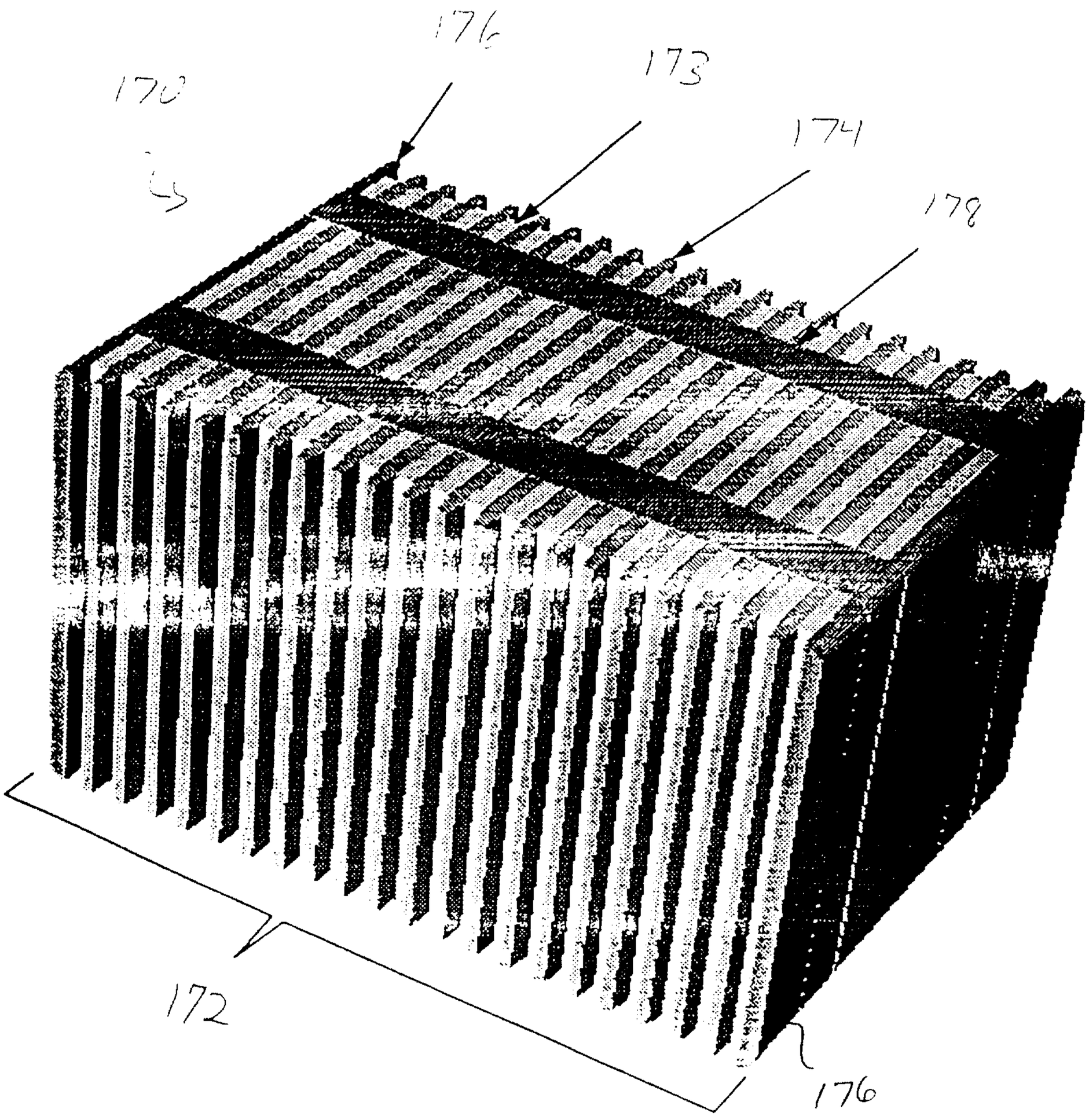

FIG. 15

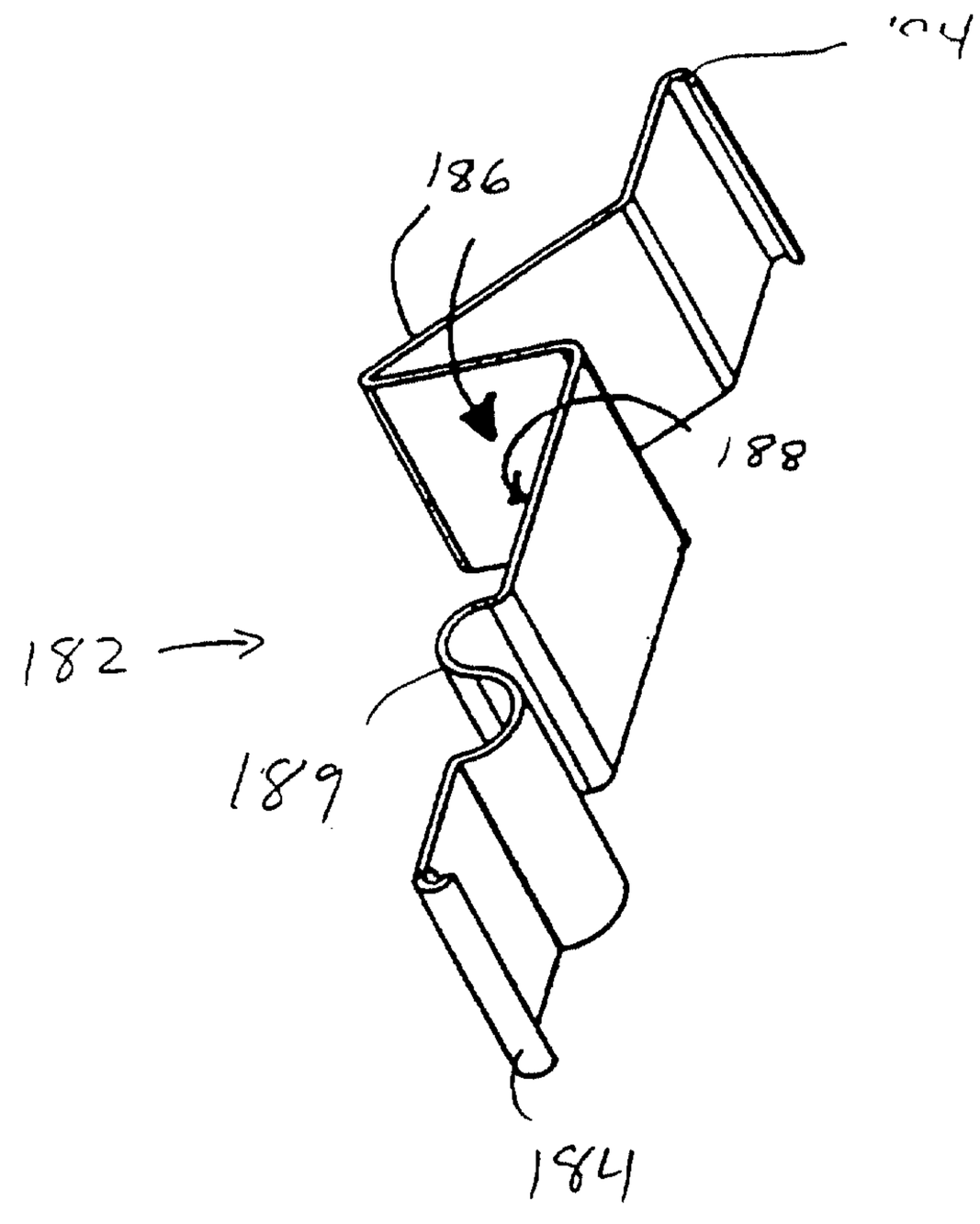

Fig 17

Fig. 16

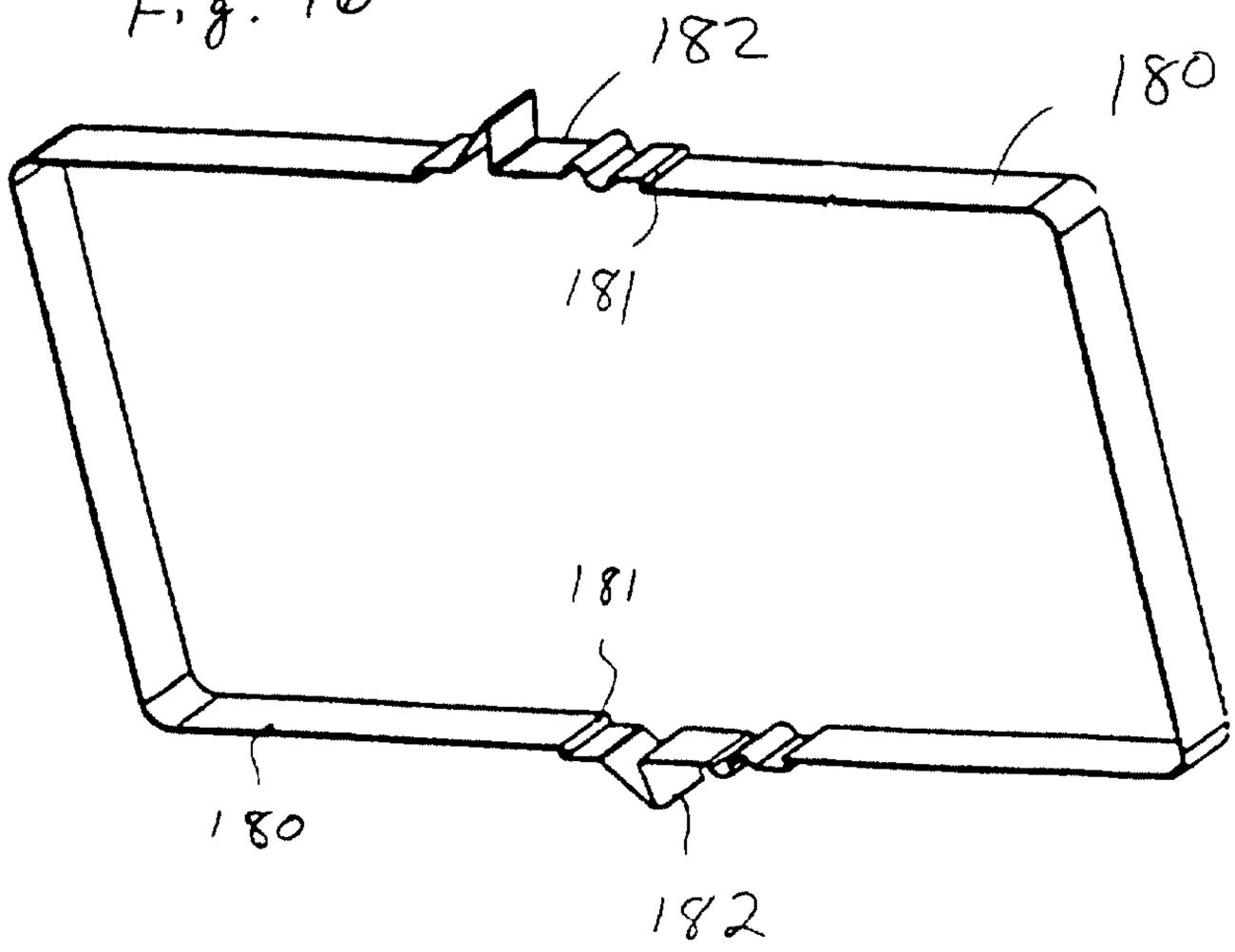

Fig. 18

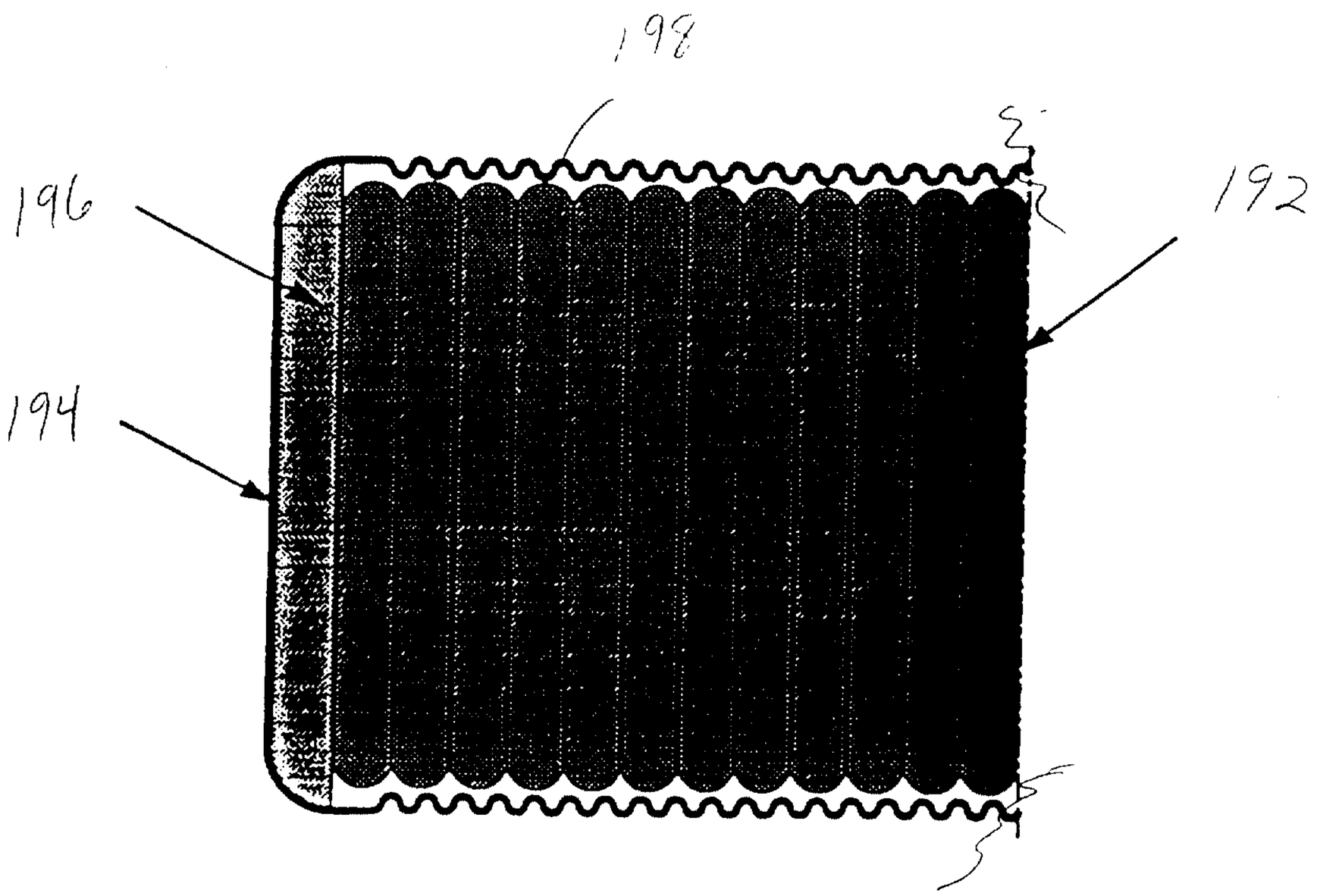

FIG. 19

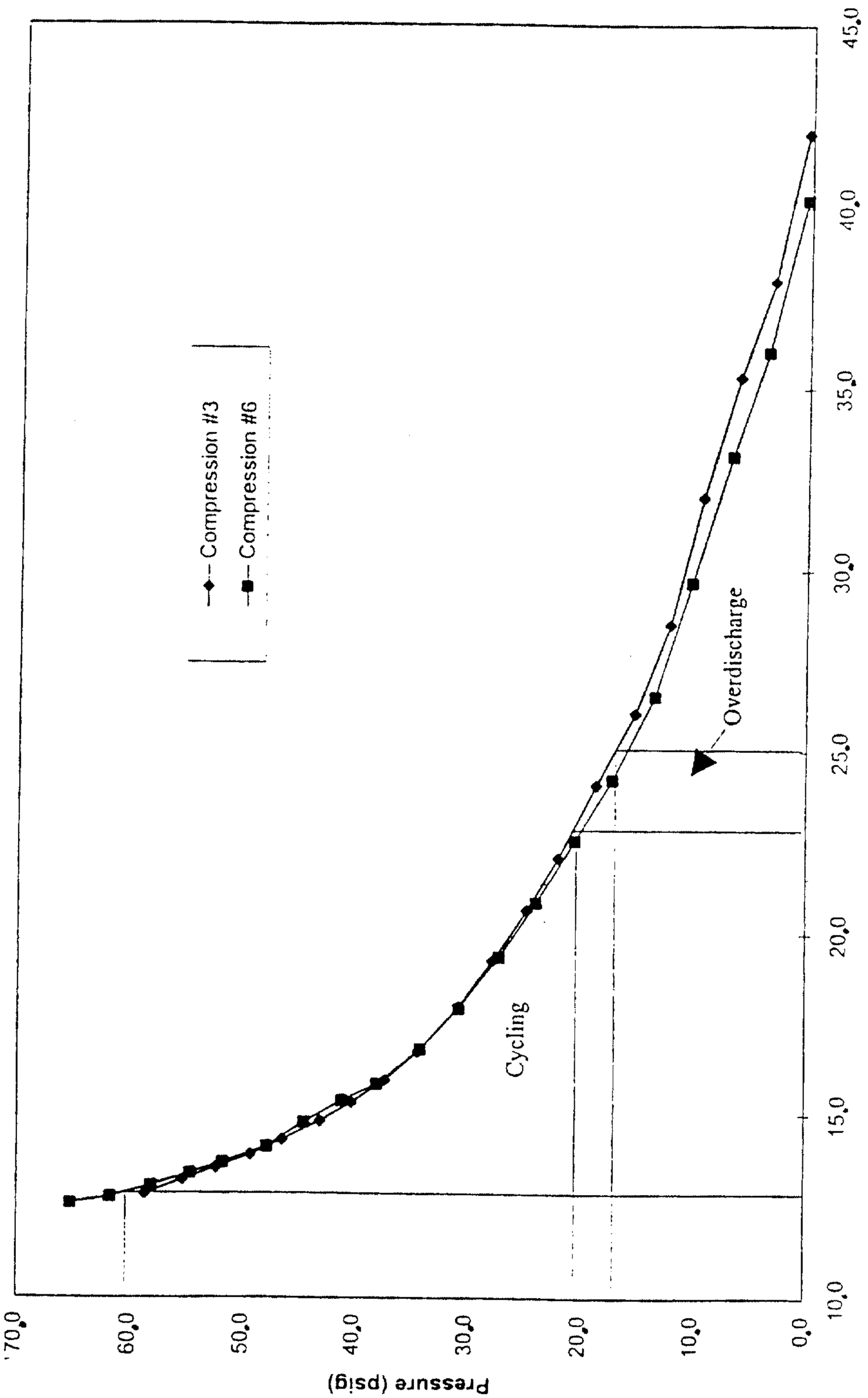
Compression #3
Compression #6
Overdischarge
Cycling
Compression (mm)
45.0
40.0
35.0
30.0
25.0
20.0
15.0
10.0
Pressure (psig)
70.0
60.0
50.0
40.0
30.0
20.0
10.0
0.0

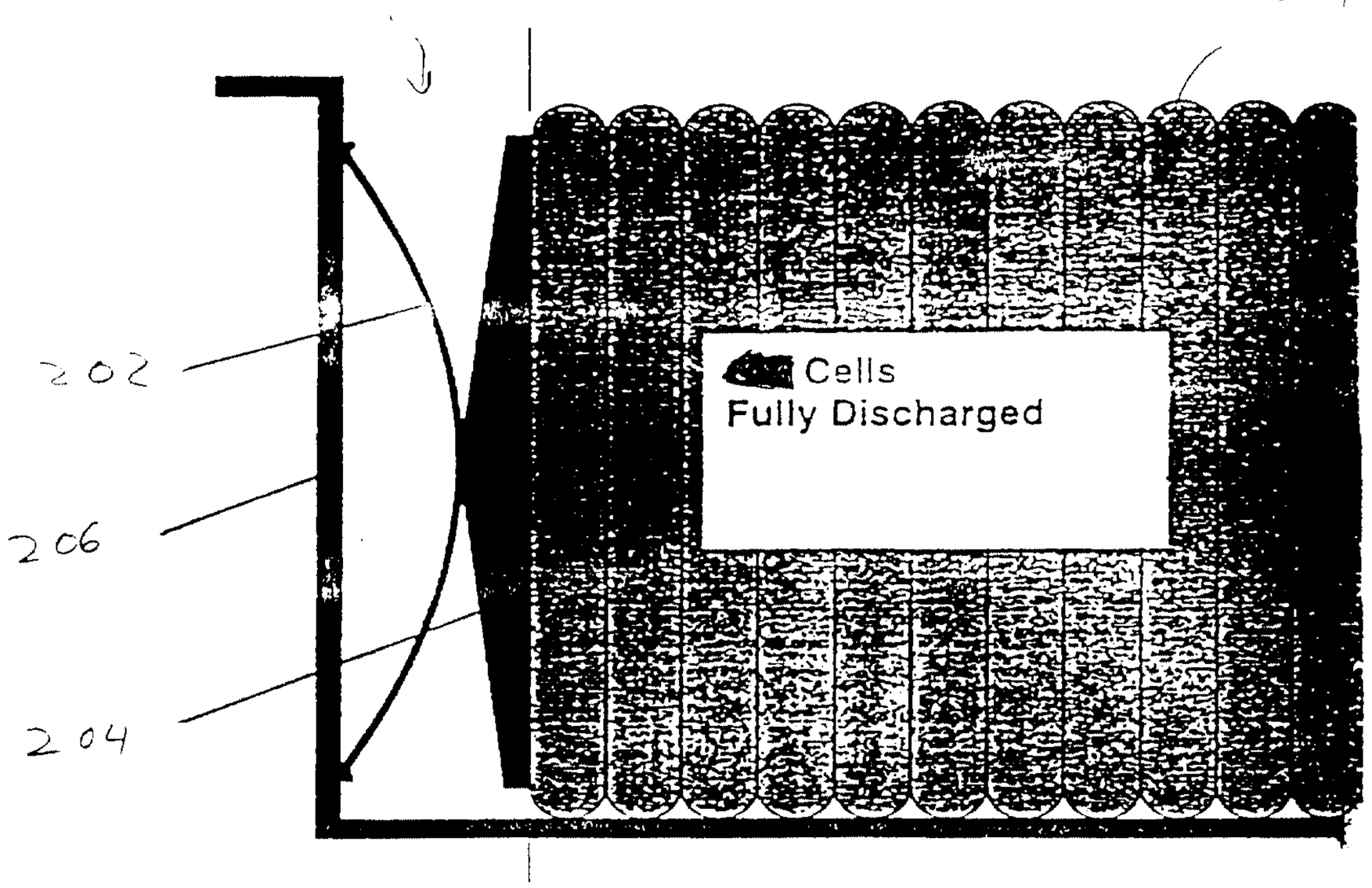
200
Fig. 20
201
202
206
204
Cells
Fully Discharged

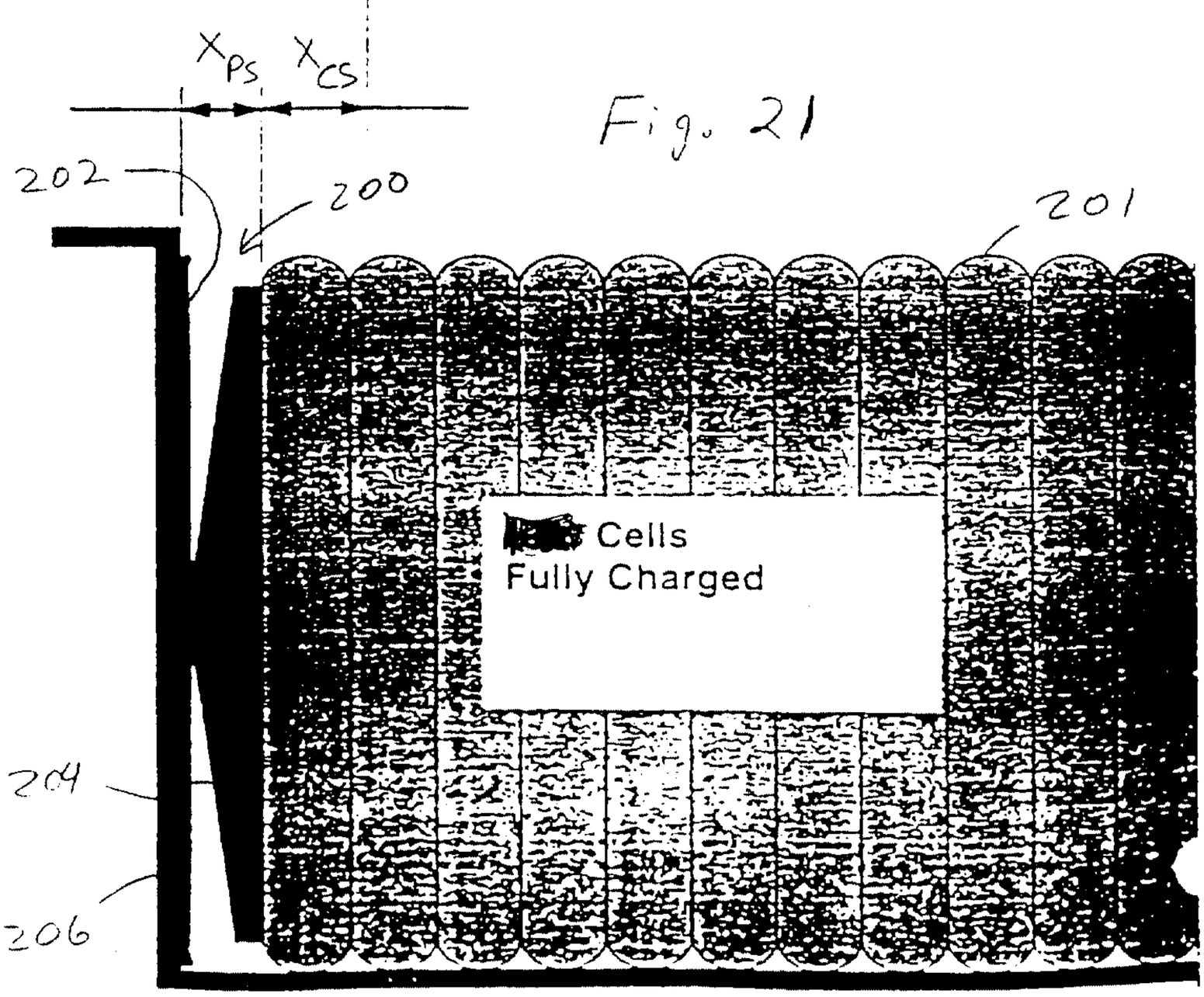
X_{PS}
X_{CS}
Fig. 21
202
200
201
Cells
Fully Charged
204
206

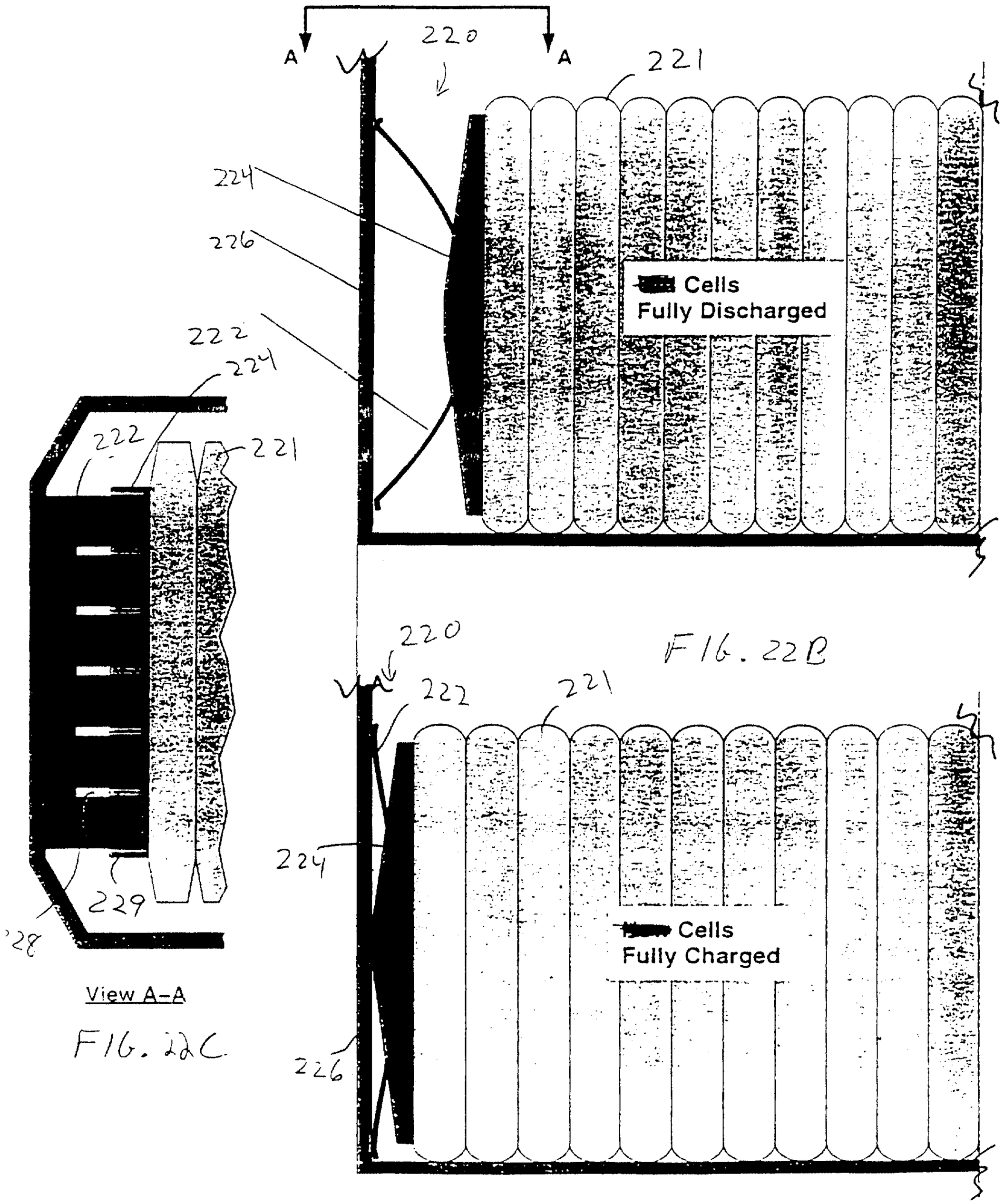

F16. 22A

F16. 22B

View A–A

F16. 22C

FIG. 23

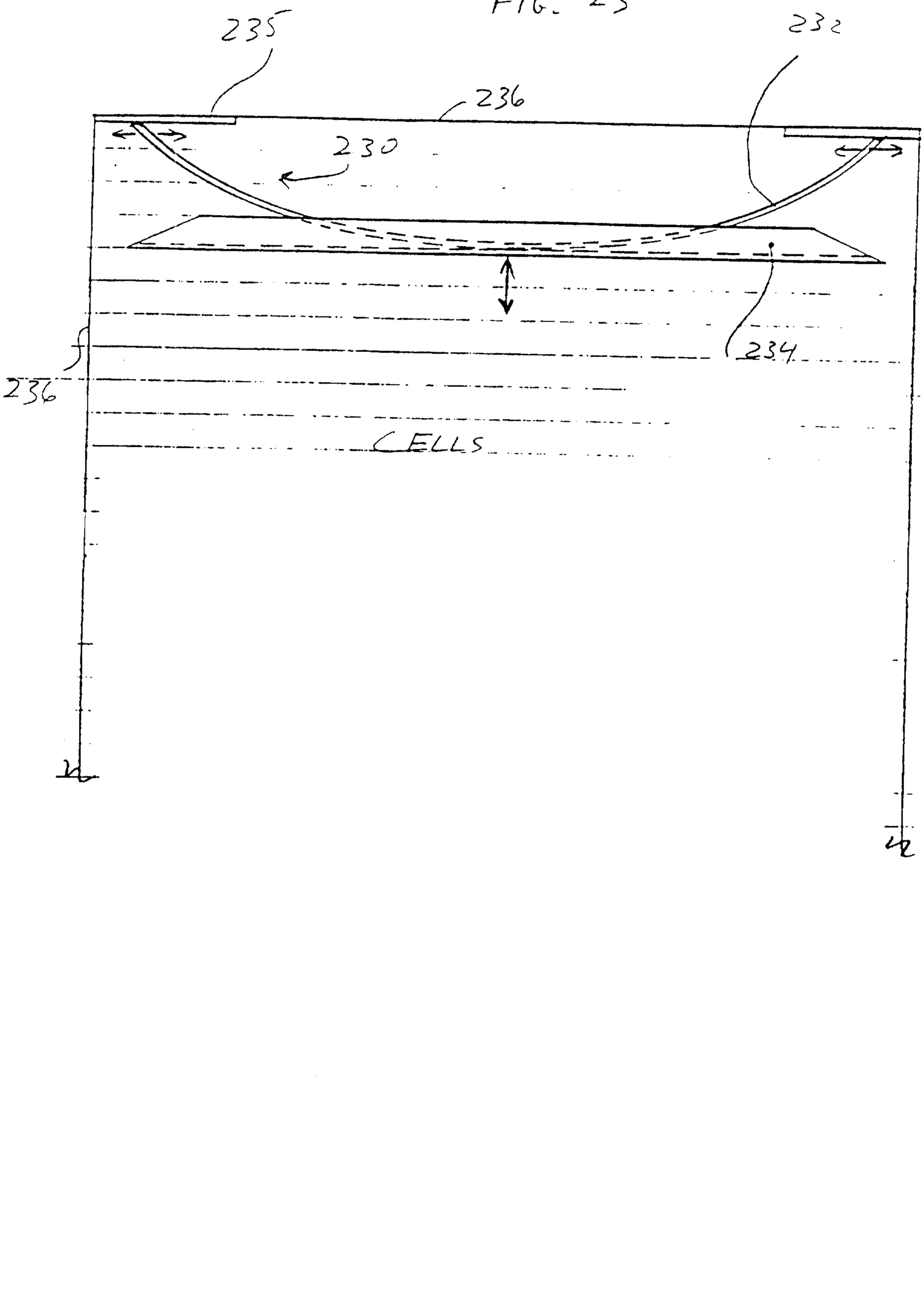

FIG 24

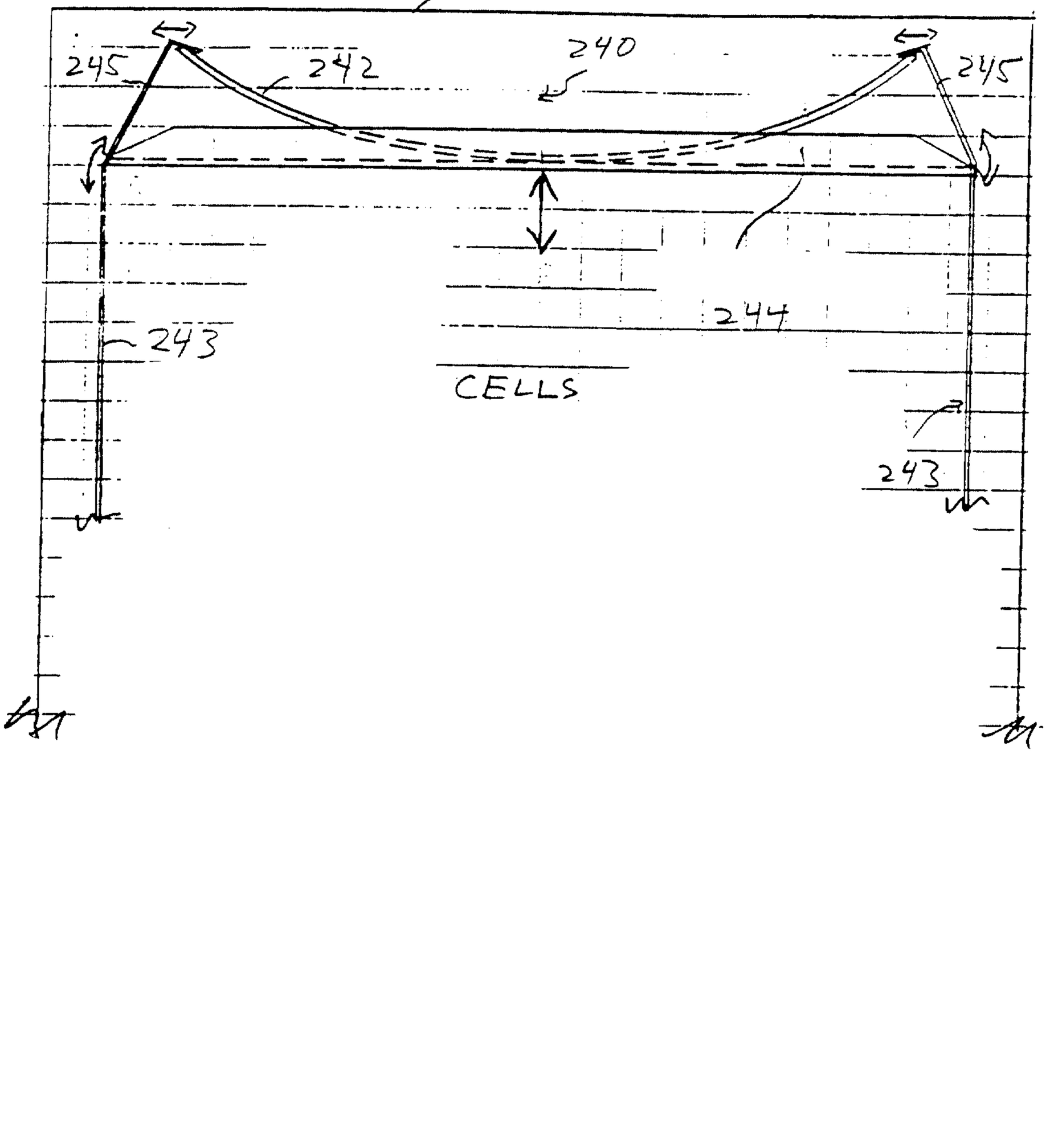

FIG. 25A

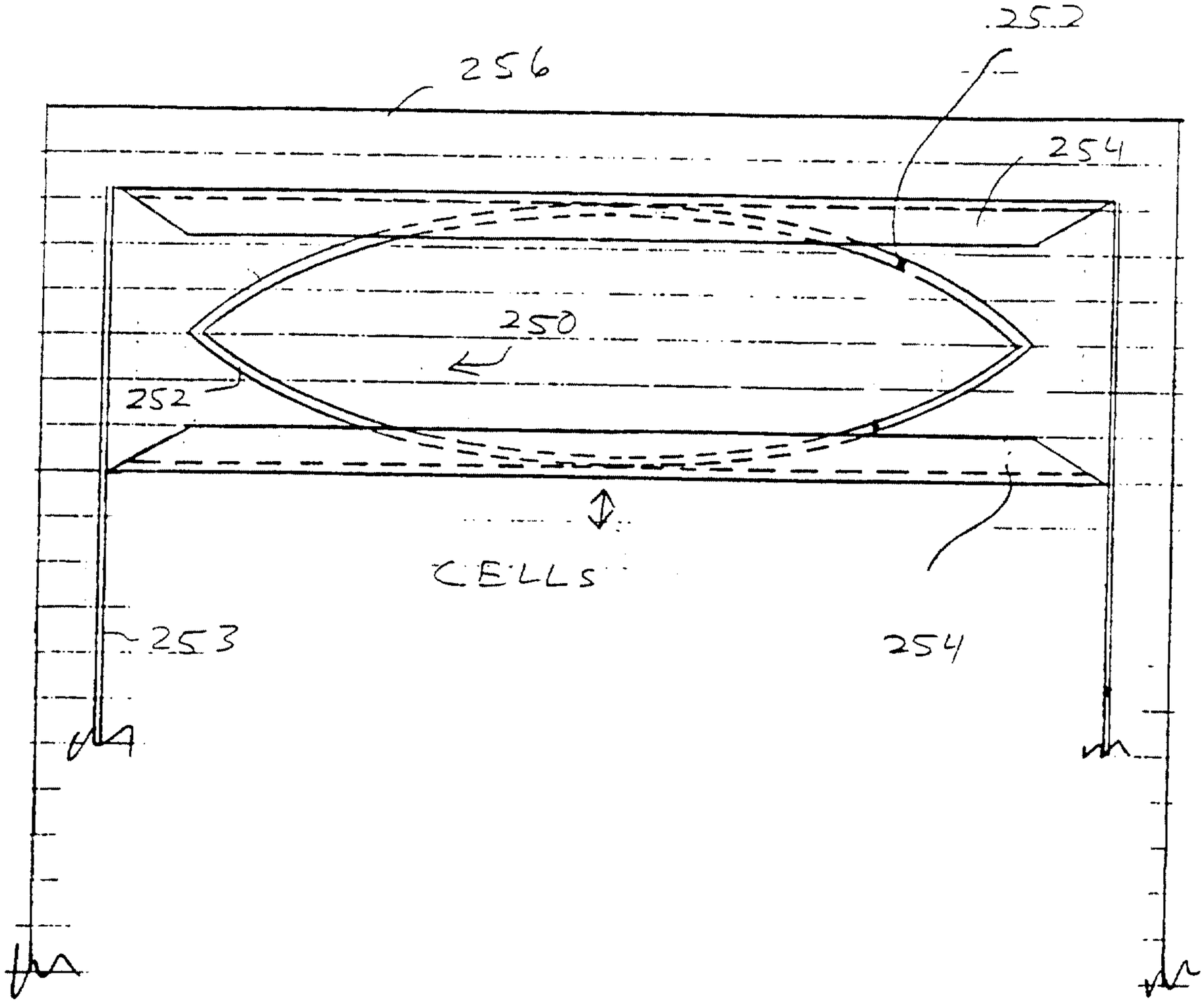

FIG. 25B

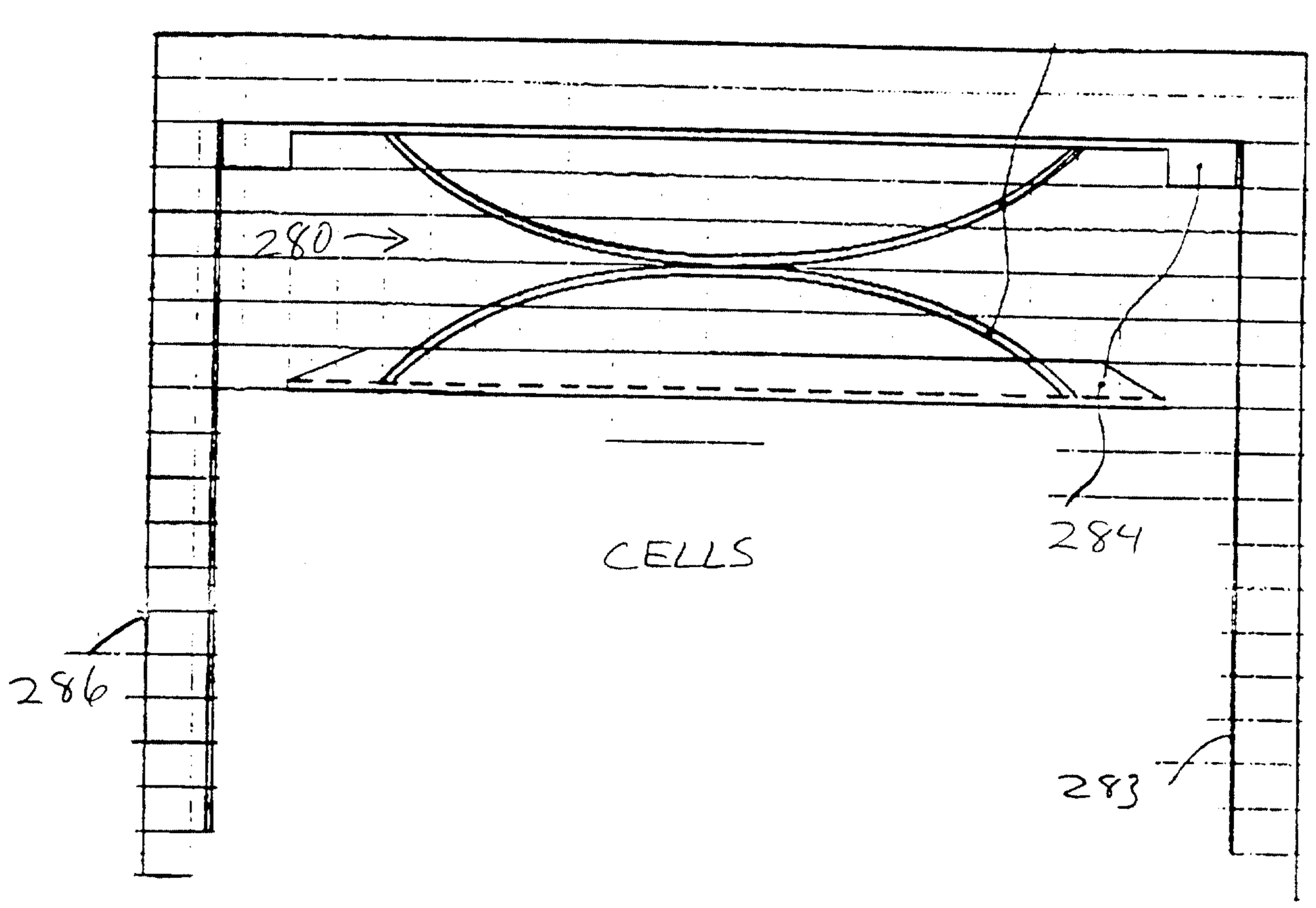

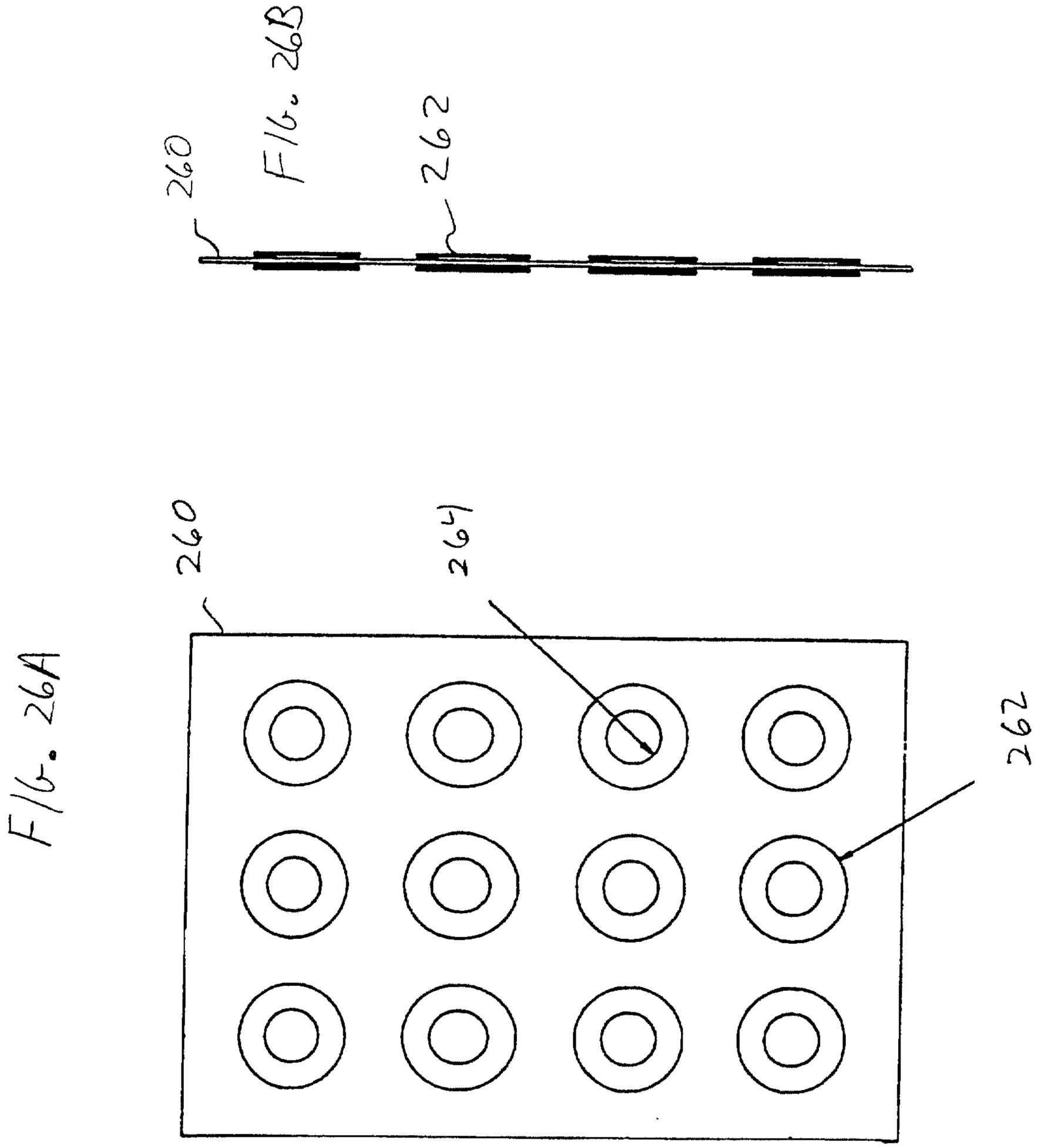

FIG. 26A

FIG. 26B

FIG. 27B

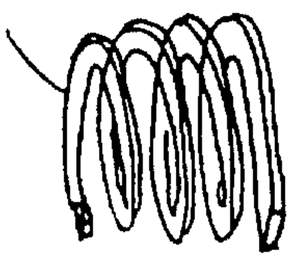

FIG. 27C

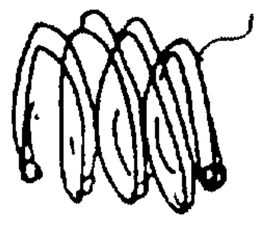

FIG. 27A

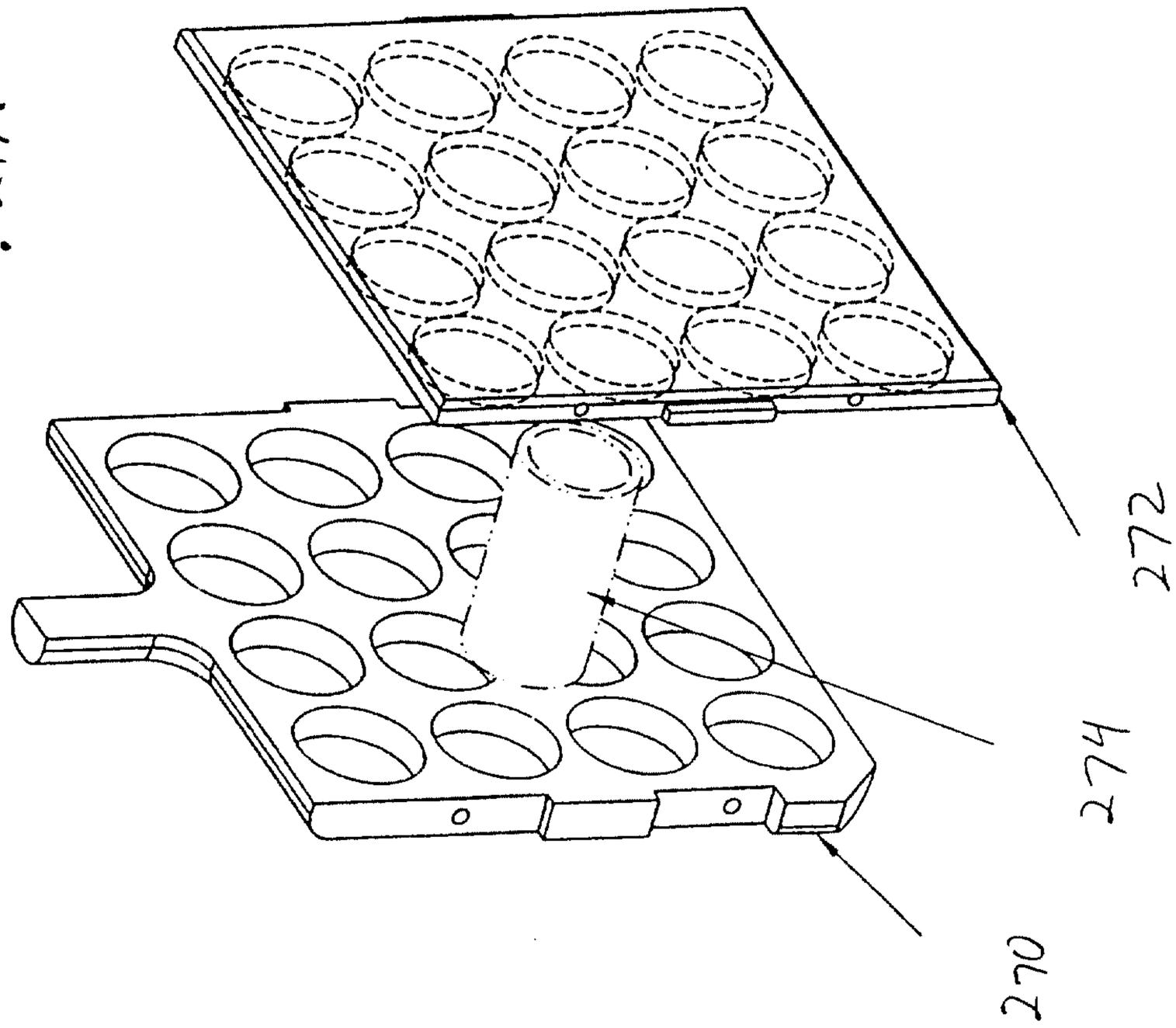

FIG. 28A

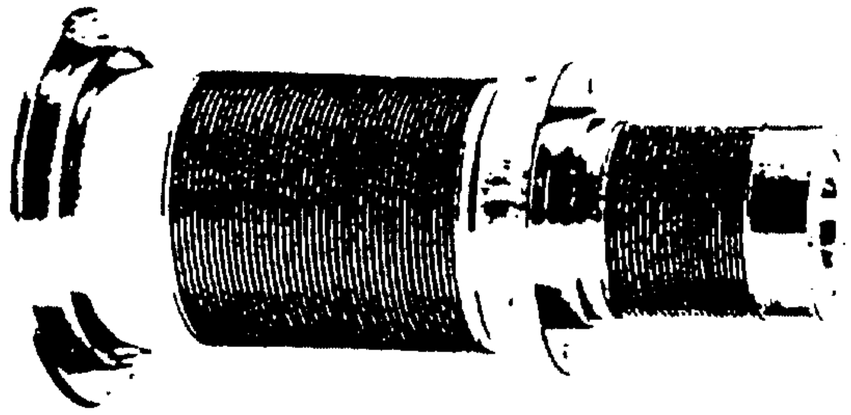

FIG. 28B

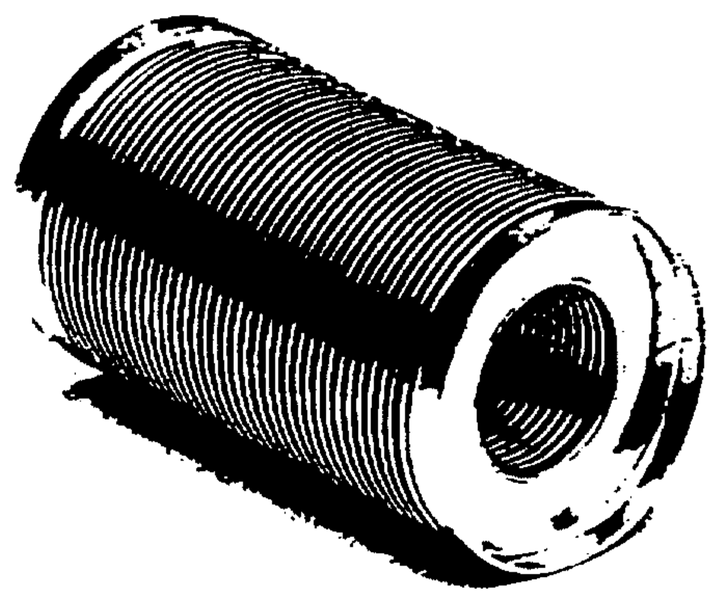

FIG. 28C

