Sept. 1, 1925. 1,551,845.

E. L. POPPER

CRYSTAL DETECTOR

Filed Nov. 9, 1923

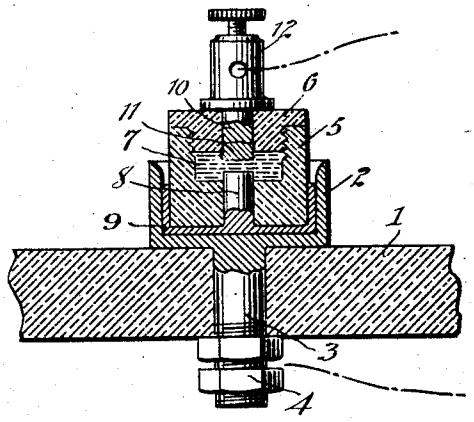

WITNESSES

Edw. Thorpe

Robert J. Hubziger.

INVENTOR

Emil L. Popper

BY Munn & Co

ATTORNEYS

Patented Sept. 1, 1925. 1,551,845

UNITED STATES PATENT OFFICE.

EMIL L. POPPER, OF NEW YORK, N. Y.

CRYSTAL DETECTOR.

Application filed November 9, 1923. Serial No. 673,808.

To all whom it may concern:

Be it known that I, EMIL L. POPPER, a citizen of the United States, and a resident of the city of New York, borough of Manhattan, in the county and State of New York, have invented a new and Improved Crystal Detector, of which the following is a full, clear, and exact description.

This invention relates to a crystal detector, and has for an object the provision of a simple, durable and compact apparatus which can be used preferably in connection with a support and insures a firm, steady contact whereby the variations in sensitivity to which crystal detectors of the usual types are subjected are avoided.

Another object concerns the provision of a detector unit formed of a minimum number of simple parts which can be readily assembled and disassembled for inspection and repair.

The invention is illustrated in the drawing, in which the figure represents a section taken through the support and the detector unit.

The form of the invention shown in the drawing is a preferred form, although it is understood that modifications in the construction and arrangement of the parts and in the character of the materials used may be adopted without departing from the spirit of the invention as set forth in the appended claims.

In accordance with the preferred form of the invention shown in the drawings, the unit is mounted on a support or panelboard 1. One element of the unit comprises a metallic cup 2 having a rearwardly extending stem 3 adapted to extend through the support and clamped thereto by any suitable means, such as nuts 4. Disposed within this metallic cup 2 is a cup-shaped member 5, preferably of insulating material such as glass. This cup-shaped body portion or member of insulating material is provided with a cover 6 screwed thereinto. A chamber 7 is formed beneath the cover 6 within the body of the cup 5 and this chamber contains a liquid, which may be any suitable conducting liquid such as mercury. The insulating body portion 5 is provided with a bore through which a metallic stem 8 projects. This stem at its outer end is connected to a metallic lining 9 covering the inner end of the insulating body portion 5 so that a large area of contact is established between the lining 9 and the metallic cup 2 to afford a good firm contact whereby the circuit between the conducting liquid in the chamber 7 and the cup 2 is very firmly established. The cover 6 is provided with a bore through which a stem 10 projects and has mounted in any suitable manner on its inner end a crystal 11, this crystal projecting sufficiently far into the chamber 7 containing the liquid as to contact therewith. The stem 10 on its outer end, outside the cover 6, is provided with a pin post 12. Suitable circuit wires, shown in dot-and-dash line, may be connected to the outer end of the stem 3 and to the pin post 12.

It is obvious that I have provided a simple durable, compact unit composed of a minimum number of parts whereby a firm, stable contact is made with the crystal, and in which the mechanical parts of the circuit are of such ample proportions as always to insure a firm, stable contact throughout, thus avoiding the usual variations in sensitivity found with crystal detectors of the general type.

What I claim is:—

1. A crystal detector unit which comprises a metallic cup having a stem extending rearwardly therefrom, said stem adapted to be mounted in a bore in a suitable support, a cup-shaped body portion of insulating material, a bore in the rear end of said cup-shaped insulating body portion, a conducting stem in said bore, a metallic lining over the rear end of the cup-shaped insulating body portion, said lining connected to said conducting stem, the lining and the cup-shaped insulating body portion adapted to be inserted in the metallic cup, above mentioned, a cover of insulating material adapted to be fastened on to the insulating body portion, said cover having a bore, a conducting stem in said last-mentioned bore, said stem extending through the bore into the chamber formed within the body portion, and a crystal mounted on the inner end of the last-mentioned conducting stem, the chamber formed within the insulating body portion adapted to contain a conducting fluid, said fluid being in contact with the first-mentioned stem and with said crystal.

2. A crystal detector unit which comprises an insulating body portion having a chamber therein containing a conducting liquid, a crystal supported within said

chamber in contact with said liquid, a conducting stem extending from said crystal through the walls of said body portion, a second conducting stem extending from said chamber in contact with said liquid through the walls of said body portion, a metallic lining surrounding the end of the body portion adjacent the second-mentioned stem, a metallic cup mounted on a suitable support, in which cup said body portion and lining are firmly mounted to insure a good contact between the lining and the cup.

3. A crystal detector unit which comprises a body portion of insulating material having a chamber therein containing a conducting liquid, a conducting stem projecting into said chamber on one side thereof and supporting a crystal thereon, said crystal being in contact with the conducting liquid, and a conducting element extending into the liquid from another point to make contact with said liquid.

EMIL L. POPPER.