Sept. 17, 1946. D. K. FERRIS 2,407,922

WRINGER

Filed May 28, 1943 4 Sheets-Sheet 1

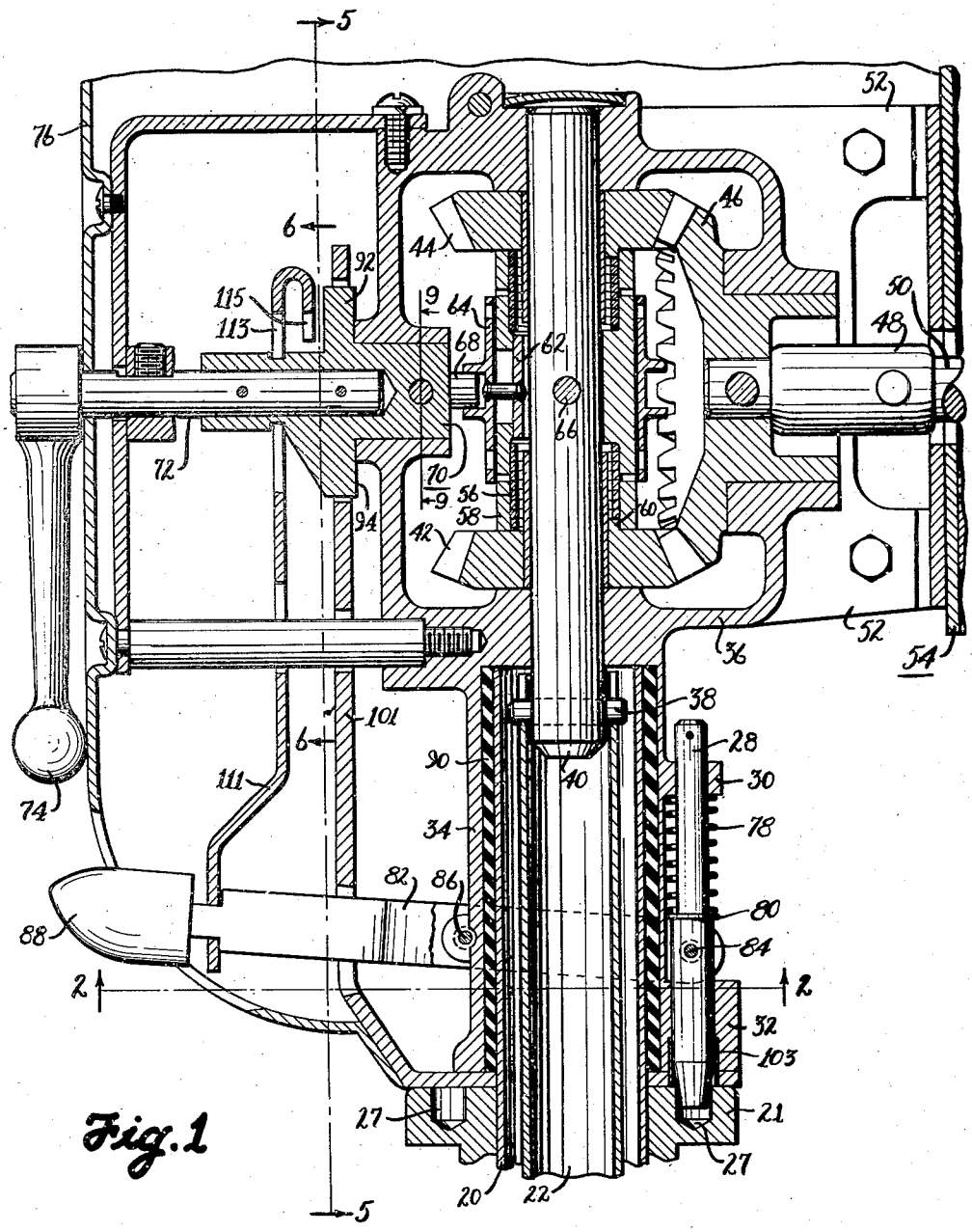

Fig. 1

INVENTOR.
Donald K. Ferris
BY Spencer Hardman and Fehr
attorneys

Sept. 17, 1946. D. K. FERRIS 2,407,922

WRINGER

Filed May 28, 1943 4 Sheets-Sheet 2

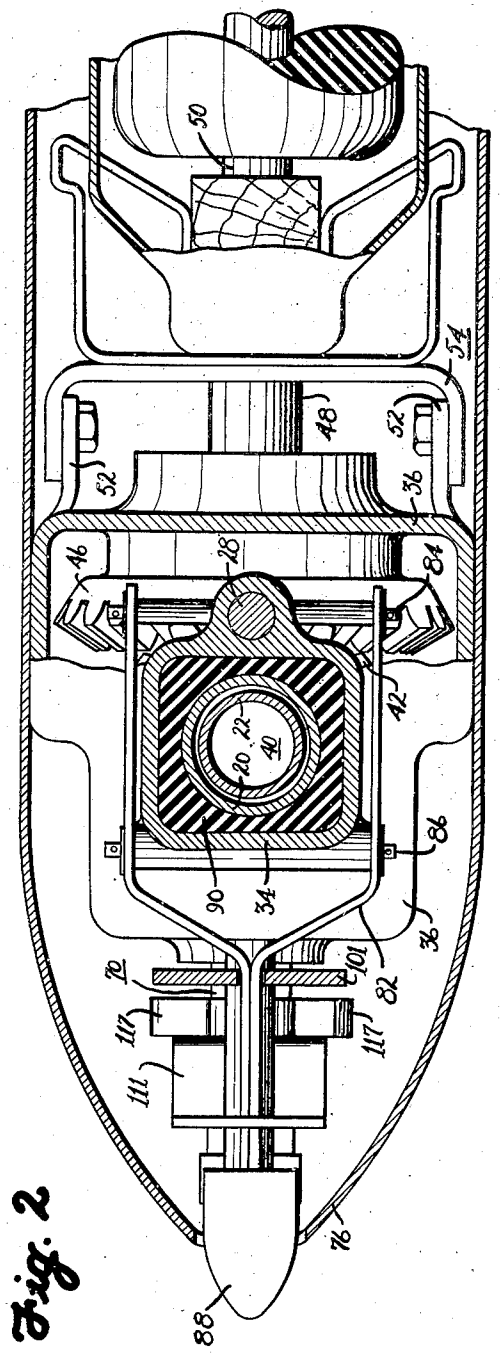

Fig. 2

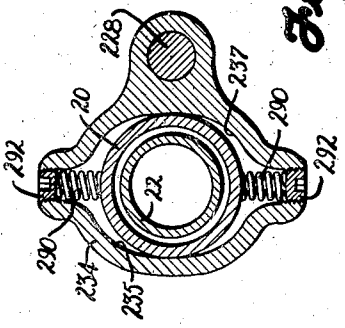

Fig. 4

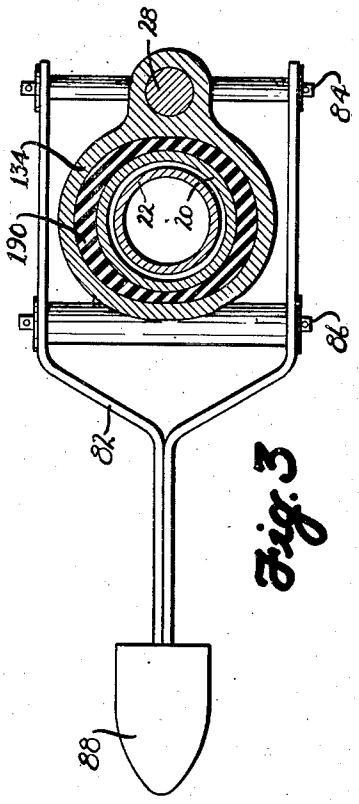

Fig. 3

INVENTOR.
Donald K. Ferris
BY Spencer Hardman and Fehr
Attorneys

Sept. 17, 1946. D. K. FERRIS 2,407,922

WRINGER

Filed May 28, 1943 4 Sheets-Sheet 3

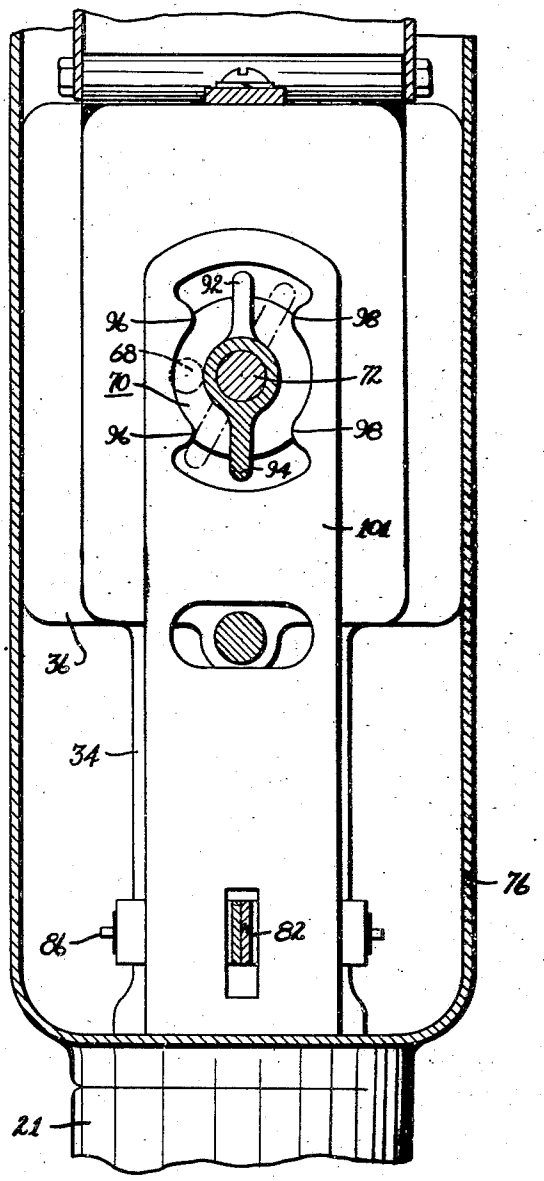

Fig. 5

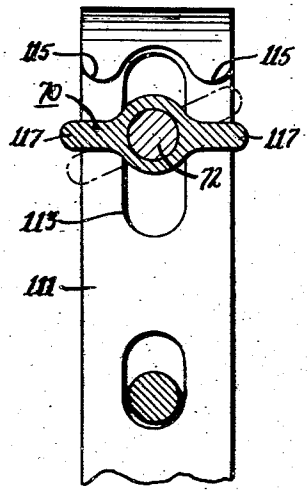

Fig. 6

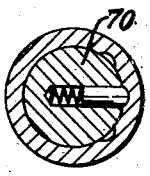

Fig. 9.

INVENTOR.
Donald K. Ferris
BY Spencer Hardman and Fehr
attorneys

Sept. 17, 1946. D. K. FERRIS 2,407,922

WRINGER

Filed May 28, 1943 4 Sheets-Sheet 4

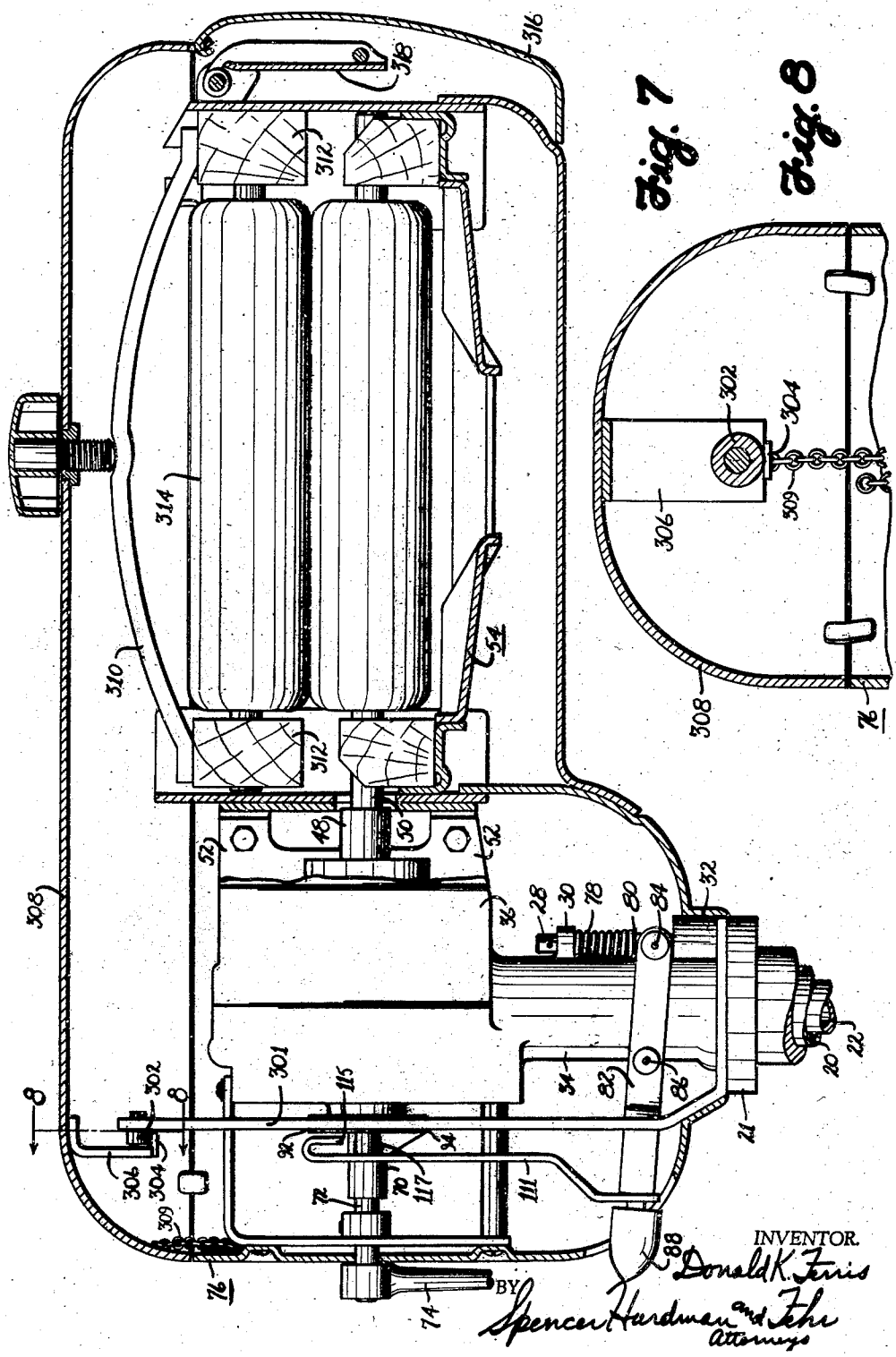

Fig. 7

Fig. 8

INVENTOR.
Donald K. Ferris
BY
Spencer Hardman and Fehr
Attorneys

Patented Sept. 17, 1946

2,407,922

UNITED STATES PATENT OFFICE

2,407,922

WRINGER

Donald K. Ferris, Dayton, Ohio, assignor to General Motors Corporation, Dayton, Ohio, a corporation of Delaware

Application May 28, 1943, Serial No. 488,840

5 Claims. (Cl. 68—249)

1

This invention relates to power driven clothes wringers.

In order to make power driven clothes wringers more safe, there has been devised the so-called instinctive type of wringer in which a tug on the clothes or any substantial movement of the body of the wringer will release the pressure on the rolls. Despite the safety value of this instinctive feature, few wringers have been made incorporating it principally because of the complicated and expensive construction employed.

It is an object of my invention to provide a simple inexpensive clothes wringer of the instinctive type.

It is another object of my invention to provide an instinctive type of wringer which will disconnect the power from the rolls and/or release the pressure on the rolls upon a predetermined maximum wringer load.

It is another object of my invention to employ the latch pin of the swing lock mechanism as a pivot for the instinctive movement of the wringer.

It is still another object of my invention to provide a wringer in which the power is disconnected from and/or the pressure released upon the rolls when there is a predetermined torque applied by the driving mechanism.

These objects are obtained by providing a floating bearing between the wringer frame and the wringer post to permit limited rotation of the entire wringer about the latch pin of the swing lock mechanism. The relative movement between the wringer frame and the wringer post is employed to disconnect the power from the rolls and/or operate the wringer pressure release preferably upon a greater amount of relative movement. This relative movement may be caused by an unusual amount of torque being applied to the wringer by the power drive or by tugging the clothes or pushing the wringer.

Further objects and advantages of the present invention will be apparent from the following description, reference being had to the accompanying drawings, wherein a preferred form and other forms of the present invention are clearly shown.

In the drawings:

Fig. 1 is a vertical sectional view through the wringer head and upper portion of the post of a wringer embodying one form of my invention;

Fig. 2 is a sectional view taken along the line 2—2 of Fig. 1;

Fig. 3 is a sectional view showing a modification of the floating bearing as it would appear in Fig. 2;

2

Fig. 4 is another sectional view showing another modification of the floating bearing as it would appear in Fig. 2;

Fig. 5 is a sectional view taken along the line 5—5 of Fig. 1;

Fig. 6 is a sectional view taken along the line 6—6 of Fig. 1;

Fig. 7 is a diagrammatic view showing a means for releasing the pressure upon the rolls by instinctive movement of the wringer;

Fig. 8 is a sectional view along the line 8—8 of Fig. 7; and

Fig. 9 is a sectional view along the lines 9—9 of Fig. 1.

Referring now to the drawings and more particularly to Fig. 1, there is shown the usual supporting post 20 containing a power driven tubular drive shaft 22. The supporting post 20 is provided with a flange 21 containing recesses 27, for receiving the lower end of the swing lock latching pin 28. The swing lock latching pin 28 is supported by an ear 30 and a boss 32 projecting from one side of the tubular floating bearing housing extension 34 of the gear case 36. The upper end of the drive shaft 22 is provided with a pair of slots which receive a transverse pin 38 provided in the lower end of the gear shaft 40. This gear shaft 40 is rotatably mounted in bearings in the top and bottom of the gear case 36 and rotatably mounted on the shaft 40 are the bevel gears 42 and 44 which mesh with the crown bevel gear 46. This crown bevel gear 46 is connected by the coupling 48 with the drive shaft 50 of the lower roll of the wringer. The gear case 36 is provided with projections 52 which connect to the roll frame 54 which includes the side stiles and the connecting frame members (see Fig. 7).

Each of the bevel gears 42 and 44 is provided with a wound spring clutch for connecting either to the gear shaft 40. These clutches are identical with the exception that their clutch springs are wound in opposite directions. For example, the wound spring 56 is located between the sleeve fixed to the gear 42 and the double-ended sleeve 58 fixed by the pin 66 to the gear shaft 40. The wound spring 56 is provided with blunt ends, the lower end resting against a projection 60 upon the gear 42 while the upper end may be engaged by the sliding key 62 carried by a shifting collar 64 which surrounds the double ended sleeve 58. The shifting collar 64 is raised or lowered by an eccentrically located pin 68 which is received

within the annular groove provided upon the shifting collar. The eccentrically located pin 68 is supported by and extends from the face of a cam member 70 to which is connected a shaft 72 provided with a handle 74 on the outside of the wringer casing 76. The cam member 70 is provided with vertical cam arms 92 and 94 and horizontal cam projections 117 which are vertical and horizontal respectively when the handle 74 is in the neutral position and which turn clockwise or counterclockwise as a unit with cam member 70 for forward or reverse wringer driving. A spring pressed pin extends transversely through the member 70 and a portion registers with notches provided in the bearing surface for resiliently latching the cam member 70 in forward reverse and neutral positions.

The movement of the handle 74 in either direction from that shown in Fig. 1 raises or lowers the shifting collar 64 to raise or lower the sliding key 62. When the sliding key 62 is raised it will engage one end of the upper wound spring clutch to connect the gear shaft 40 with the bevel gear 44 to turn the crown gear 46 and the lower roll shaft 50 in one direction. If the handle 74 is moved in the opposite direction the shifting collar 64 and the sliding key 62 will be lowered to cause it to engage one end of the wound spring clutch 56 to force the spring into gripping engagement with the double-ended sleeve 58 to connect the gear 42 through its projection 60, the wound spring 56, the sliding key 62, the double-ended sleeve 58 and the pin 66 to the gear shaft 40.

In order to provide the instinctive feature in a simple way, I pivot the entire wringer upon the latch pin 28 of the swing lock mechanism and provide a floating bearing between the floating bearing housing 34 and the upper portion of the wringer post 20 which it surrounds. The latch pin 28 is provided with a compression type coil spring 78 concentric with it, extending between the ear 30 and a shoulder 80 upon the latch pin. The lower end of the latch pin 28 is conically pointed so that it may readily enter the latching recesses 27 provided in the flange 21 upon the wringer post 20. To move the wringer to another angular position, the latch pin 28 may be raised against the force of the spring 78 by the swing lock lever 82 which is pinned by the pin 84 to the latch pin 28. This swing lock lever 82 is pivoted upon the pin 86 to the side of the bearing housing 34. A knob 88 projecting through an opening in the casing 76 may be used for operating the forked swing lock lever 82 to raise the swing lock latch pin 28.

The floating bearing support between the housing 34 and the upper portion of the post 20 is provided by a soft rubber member 90 provided between their adjacent walls. This rubber member 90 is preferably fastened to the walls of the portion 34, but is not fastened to the post 20, so that it may rotate upon the outer walls of the post 20 when it is desired to swing the wringer to another angular position provided by any of the latching recesses 27. As is better shown in Fig. 2, the portion 34 is made substantially square in cross-section so as to increase its ability to hold the rubber member 90. By this arrangement when the swing lock latch pin 28 is in position as shown in Fig. 1 the entire wringer will pivot upon this latch pin, but this pivoting will be resisted by the compression of the portion of the rubber member 90 upon one side of the post 20. The rubber member 90 resists the normal torque reaction due to the torque applied by the drive shaft 22 to the gearing and the rolls as well as the movement which may be caused by feeding clothes into the wringer.

In order to cause such a movement of the entire wringer to move the shifting collar 64 to its middle or off position, sometimes called the neutral position, the cam member 70 is provided with the vertical cam arms or projections 92 and 94 as shown in Fig. 5, which in their angular positions may be engaged by the projections 96 and 98 provided upon opposite sides of an aperture in the top portion of a vertical strap member 101. This strap member 101 is provided with a bottom portion extending at right angles to its vertical upper portion. This right angle portion surrounds and forms a bearing upon the upper portion of the post 20 and is located between the flange 21 and the bottom of the floating bearing housing extension 34 of the gear case. It is pivotally connected with the boss 32 by a sleeve 103 which forms a pivotal connection between the two, which might otherwise be formed by the latch pin 28. The lower portion of the vertical strap member 101 does not surround the rubber member 90 but fits as a bearing member directly against the upper portion of the post 20 and rotates upon the post 20 with the wringer when the latch pin 28 is withdrawn from the flange 21. However, when the latch pin 28 engages one of the recesses 27, the vertical strap member 101 becomes locked to the post 20 and since the wringer is pivoted upon the latch pin 28, it will move relatively to the vertical strap member 101 so that one of the projections 96 or 98 will engage one of the cam portions 92 or 94 to move them from an inclined position, such as the one shown in dot and dash lines, to the vertical position shown in full lines in Fig. 5, which will move the handle 74, its shaft 72, cam member 70, the pin 68, the shifting collar 64, and the sliding key 62, from one of its driving positions into the neutral or "off" position in which both of the bevel gears 42 and 44 are declutched from the gear shaft 40.

To prevent the release of the swing lock mechanism when one of the clutches is engaged, there is provided a vertical link 111 loosely connected at its lower end to the swing lock lever 82 and provided with a vertical slot 113 at its upper end which is received within a groove in the cam member 70. The upper end of this link 111 is bent 180° and is provided with a pair of humps 115 which, when the swing lock lever 82 is moved to release the latch pin 28, will engage the horizontally extending cam projections 117 when in inclined position, as shown by the dot and dash lines in Fig. 6, and move them to the horizontal position shown in full lines in Fig. 6, to move the handle 74 and the shifting collar 64 from one of the driving positions to the neutral, or declutched position in which the gear shaft 40 is disconnected from the bevel gears 42 and 44.

In Fig. 3 the portion 134 corresponding to the portion 34 in Figs. 1 and 2, is made oval in shape rather than square shape and the rubber member 190 corresponding to the rubber member 90 in Figs. 1 and 2 fills in the space between the housing 134 and the top of the post. This form provides a more even distribution of the compression of the rubber. In Fig. 4 the rubber is replaced by the compression springs 290 located upon the front and rear sides of the housing 234 which corresponds to the housing 34 of Figs. 1 and 2. This housing 234 is provided with ad-

justing screws 292 preferably of the Allen head type by which the tension of the springs 290 may be so adjusted to regulate the exact force required to be applied to the wringer in pivoting it about the latch pin in order to cause it to engage the projections upon the vertical strap member 101 to move the control mechanism from one of the driving positions to the neutral or stopping position. The setting of the Allen adjusting screws 292 determines the torque required of the drive shaft 22 about the latch pin 226 to move the wringer to the stopping position. The Allen screws 292 may be adjusted to set the springs 290 to different tensions so as to compensate for the torque action of the drive shaft 22. This is possible because the torque action of the drive shaft 22 does not change in direction with the reversing of the wringer control. By this arrangement it is possible to make the force to push or pull the wringer frame, which is required in order to move the normal control means to the neutral position, substantially the same regardless of the direction of the operation. In the form shown in Fig. 4 it is essential that the interior walls of the portion 234 provide a floating bearing for the upper end of the post 20 by engaging the left and right sides of the post 20 as shown in Fig. 4. These interior wall surfaces designated by the reference characters 235 and 237 preferably have that portion of their surfaces which is in engagement with the post 20 during movement of the wringer about the swing lock latch pin 228 in the form of an arc having its center concentric with the swing lock latch pin 228.

This same instinctive mechanism may also be used to release the pressure upon the rolls as is shown in the form illustrated in Figs. 7 and 8. For this purpose, without any other change, the vertical strap member 101, designated in Figs. 7 and 8 as 301, is projected upwardly and provided at its upper end with a roller 302. When the entire wringer is in its normal position, this roller rides upon a flange 304 at the bottom of a strap member 306 fastened to and extending down from the top of the top section 308 of the casing 76. The top section 308 supports the pressure spring 310 which applies the pressure to the upper bearing blocks 312 which receives the shaft ends of the upper roll 314. The opposite end of the upper section 308 is pivotally connected to an end section 316 which is connected by an over-center toggle link connection 318 with a portion of the wringer frame 54. Thus the over-center toggle link mechanism 318 holds the one end of the top section 308 in operating position while the roller 302 by its engagement with the flange 304 holds the other end in position against the tension of the pressure spring 310.

Should the entire wringer be moved a sufficient amount about the index latch pin as a pivot, the roller 302 being mounted upon the strap member 301, which in turn is latched to the post, will not move with the wringer body. The flange 304, however, will move with the wringer body and will move relatively to the roller 302. When the wringer body is moved sufficiently the roller will reach the end of the flange 304 and will release the flange and in so doing will release that end of the top section 308 allowing it to move upwardly to release the tension of the pressure spring 310 thereby releasing the pressure upon the rolls. A chain 309 loosely connects the top section 308 with the casing 76 to limit the upward movement of the top section 308. The width of

the flange 304 as viewed in Fig. 8 will govern the point of the pivotal movement at which the pressure will be released. Preferably this is made wide enough so that release of the pressure will not occur until after the control mechanism is moved to the neutral position, so that the release of the pressure will only occur upon an extreme movement while movement of the control mechanism to neutral position will be accomplished by a more moderate movement of the wringer upon the swing lock latching pin as a pivot.

This instinctive arrangement has a further advantage if there should be an excessive opposition to the movement of the rolls. For example, if a hand or arm should be caught in the wringer, without applying the lateral force necessary to move the wringer about the latch pin as a pivot, this movement will be accomplished by the torque reaction of whichever bevel gear 42 or 44 happens to be in driving engagement with the crown gear 46. The torque reaction will tend to cause the bevel gear to move laterally and in so doing will pivot the entire wringer bodily about the latch pin as a pivot to operate the instinctive stop and pressure release mechanism.

While the form of embodiment of the invention as herein disclosed, constitutes a preferred form and several other forms, it is to be understood that other forms might be adopted, as may come within the scope of the claims which follow.

What is claimed is as follows:

1. A wringer having a wringer frame, rolls mounted in the frame, a pressure means for the rolls, a driving mechanism for driving the rolls, a swing lock mechanism including a removable latching pin eccentric to said driving mechanism forming a pivot for said frame, and means responsive to a pivotal movement of said frame about said pin for disconnecting the driving mechanism from the rolls.

2. A wringer having a wringer frame, rolls mounted in the frame, a pressure means for the rolls, a driving mechanism for driving the rolls, a swing lock mechanism including a removable latching pin eccentric to said driving mechanism forming a pivot for said frame, and means responsive to a pivotal movement of said frame about said pin for releasing the pressure from the rolls.

3. A wringer having a wringer frame, rolls mounted in the frame, a pressure means for the rolls, a driving mechanism for driving the rolls, normal control means having forward, reverse and neutral positions for controlling said driving mechanism, means providing a floating support for said frame, and means responsive to a movement of said frame with respect to its floating support for first moving said normal control means to its neutral position for disconnecting the driving mechanism from the rolls and thereafter upon further movement of said frame for releasing the pressure from the rolls.

4. A wringer having a wringer frame, rolls mounted in the frame, a pressure means for the rolls, a wringer post for supporting said frame, gearing for driving said rolls, said post being provided with movable drive shaft means for driving said gearing, movable bearing means permitting both relative rotation and relative lateral movement between said post and said frame, a swing lock mechanism including a removable latching pin providing a pivot between said frame and said post and preventing relative rotation upon said movable bearing means but permitting relative lateral movement between said post and said

frame with said latching pin as a pivot, and means operated by the relative lateral movement between said post and said frame for varying the operation of said wringer.

5. A wringer having a wringer frame, rolls mounted in the frame, a pressure means for the rolls, a wringer post for supporting said frame, gearing for driving said rolls, said post being provided with movable drive shaft means for driving said gearing, movable bearing means permitting both relative rotation and relative lateral movement between said post and said frame, a swing

lock mechanism including a removable latching pin providing a pivot between said frame and said post and preventing relative rotation upon said movable bearing means but permitting relative lateral movement between said post and said frame with said latching pin as a pivot, means operated by the relative lateral movement between said post and said frame for varying the operation of said wringer, and means responsive to the removal of said latching pin for rendering said wringer inoperative.

DONALD K. FERRIS.