H. SCHER.

COLLAPSIBLE CARRIER.

APPLICATION FILED SEPT. 21, 1916.

**1,231,654.** Patented July 3, 1917.

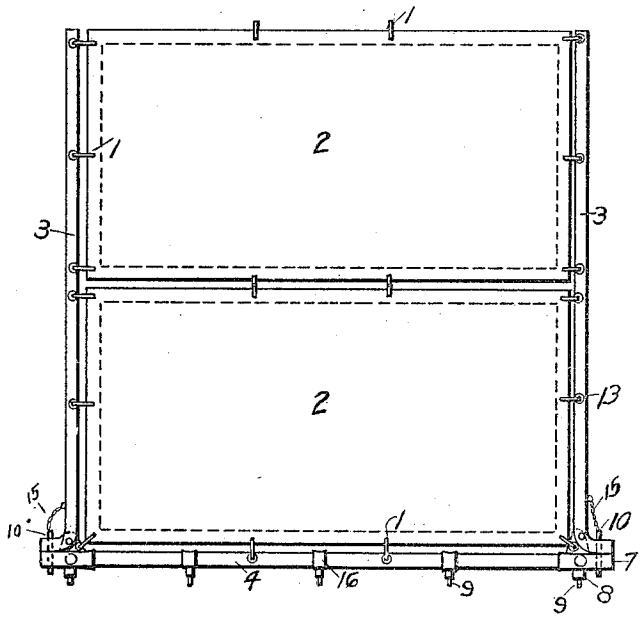

Fig. 1.

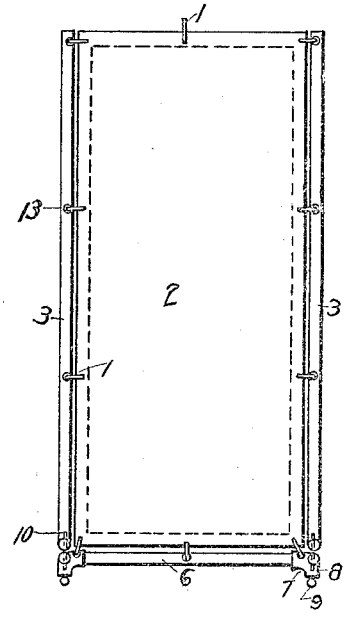

Fig. 2.

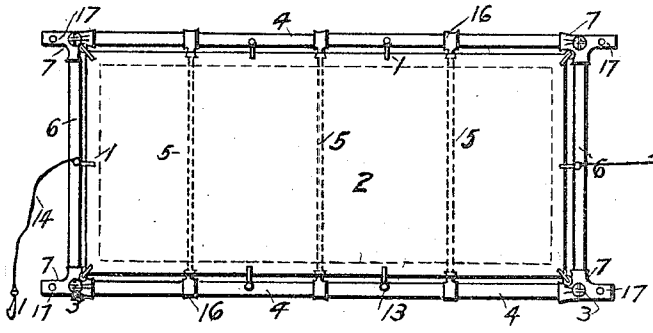

Fig. 3.

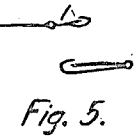

Fig. 5.

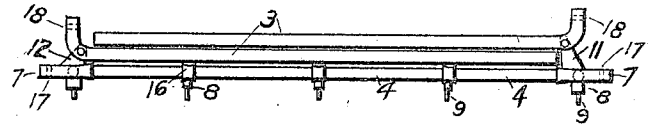

Fig. 4.

Witnesses

Gustav. Bergman

Robert Langyar

Inventor

Harry Scher

# UNITED STATES PATENT OFFICE.

HARRY SCHER, OF BROOKLYN, NEW YORK.

## COLLAPSIBLE CARRIER.

1,231,654. Specification of Letters Patent. Patented July 3, 1917.

Application filed September 21, 1916. Serial No. 121,433.

*To all whom it may concern:*

Be it known that I, HARRY SCHER, a citizen of the United States, residing at Brooklyn, in the county of Kings and State of New York, (whose address is 358 Nostrand Ave.,) have invented a new and useful Collapsible Carrier, of which the following is a specification.

This invention relates to an improved collapsible carrier for parcel post matter, merchandise and the like.

One of the objects of this invention is to provide an exceedingly simple, inexpensive and efficient collapsible carrier of maximum capacity which may readily be collapsed into minimum size for convenience in transportation and the like.

A further object is to provide a carrier of the character referred to which can be constructed of various sizes. The smaller sizes can be constructed to take the place of about as little as three (3) canvas parcel post sacks. The larger sizes can be constructed to take the place of about as much as twenty (20) canvas parcel post sacks. The larger sizes, in spite of their enormous capacity can still be used with the utmost convenience, in mail cars, wagons, freight elevators, etc., on account of their oblong proportions.

A further object is to provide a carrier of the character referred to for despatching distant parcel post mail matter in loads at designated points nearest their destination, thereby eliminating an objectionable feature in the sack or other small receptacle and paving the way for further improvements in this direction.

A further object is to provide a carrier of the character referred to for exchanging loads of parcel post matter between large post offices.

A further object is to provide a carrier of the character referred to for despatching loads of parcel post matter from mail order houses to post offices.

A further object is to provide a carrier of the character referred to, constructed of such uniform and detachable parts as to easily permit replacement of said parts in case of damage thereto.

A further object is to provide a means whereby the carrier may be conveniently moved from place to place without causing damage to the contents therein.

With the above objects in view, this invention consists of the combination, construction and arrangements of parts all as hereinafter more fully described, claimed and illustrated in the accompanying drawings, in which:

Figure 1 is a front view of a device constructed in accordance with the present invention; Fig. 2 is a side view; Fig. 3 is the plan, and Fig. 4 shows the framework on the long side collapsed. Fig. 5 shows the kind of hook used throughout this device for connecting canvas dressings and drawing ropes to framework.

A collapsible package carrying device embodying the parts of this invention, comprises a suitable frame with a method of collapse; bracing plugs or other means serving a similar purpose to keep the device in an upright position when in use; detachable flexible dressings of uniform size equipped with a plurality of hooks and capable of being used on each and every part of the device where dressing is required; a sufficient number of rollers, and detachable drawing ropes with a hook at each end capable of being hung on the device when not in use.

Throughout the following description and on the several figures of the drawings, similar parts are referred to by like reference characters.

Specifically describing the invention and referring to the drawings, the numerals are designated as follows:

2 indicates the dressings which are equipped with hooks 1 and are made of canvas or other flexible material consisting of seven uniformly sized detachable pieces arranged about the frame in box-like manner leaving the top open—viz., one piece laid flat attached across the base, one piece attached vertically across each short side and two pieces attached horizontally across each long side. 3 is a bar upright and 4 is a base bar on the long side. 5 in Fig. 3 is a horizontal bar that supports the base canvas. 6 in Fig. 2 the base bar on the short side. 7 is a five-way pipe connection for the base corners arranged and perforated in such manner as to enable plug 10 to hold in upright position bar 3 on extension 11 or 12. 8 is an extension of the connection 7 and pipe connection 16 into which roller 9 fits. 13 is a ring on which hook 1 catches. 14 in Fig. 3 is a detachable drawing rope attached to base bar 6. 15 is a small chain attached to upright 3 for holding plug 10.

16 is a four-way pipe connection into which base bar 4, horizontal bar 5 and extension 8 connect. 17 and 18 are perforations in connection 7 and upright 3 respectively, for admitting plug 10.

In Fig. 4 of the drawings, reference can be had to extensions 11 and 12. They are flat upward extensions by which uprights 3 are held intact by, and revolve about on pin connections; the center of bearing of 11 being higher than 12 so as to enable uprights 3 hinged to extensions 11 to lay over on uprights 3 hinged to extensions 12 when collapsed.

From what has been said it will be observed that I have produced a collapsible carrier that is exceedingly simple in construction and which is loaded and unloaded by simply detaching any side of the flexible dressing. It will also be further noted that the same is particularly valuable for use in post offices for the handling of parcel post matter even though its use cannot be entirely of the same nature as a canvas sack (on account of its size). It could only eliminate the canvas sack in so far as a new mode of parcel post distribution would warrant. For instance, loads of parcel post matter could be despatched in this carrier to designated points nearest their destination and from there be distributed in such manner as would be consistent with efficiency under the circumstances.

Having thus described my invention what is claimed as new, is:

1. In a collapsible carrier, a base portion, a body frame comprising collapsible uprights hinged to the corners of said base portion, detachable flexible dressings secured to said base portion and body frames, said base portion and body frames constructed in such oblong manner that the length of the uprights of said body frame shall be approximately the same length as the long side of said base portion and twice the length of the short side of said base portion, thereby conforming to a structure that will properly permit the use of a uniformly sized detachable flexible dressing on any part of the device where the use of said dressing shall be required.

2. In a collapsible carrier, a base frame, a body frame comprising collapsible corner uprights, flexible dressings secured to said base and body frames, said uprights hinged to said base on extensions, pin connections associated with said uprights and said extensions, the center of bearing of said extensions being higher at one end of the device thereby enabling one pair of the uprights to properly lay over on the other pair of uprights after collapse, said method of collapse being accomplished by a semi-revolution of said uprights on said pin-connections.

3. A collapsible carrier comprising an open base frame, collapsible upright frames hinged to the corners of said base frame, uniformly sized detachable flexible dressings secured to said base and upright frames, a plurality of rollers secured to said base frame and detachable drawing ropes also secured to said base frame said ropes having hooked ends thereby permitting detachment from said base frame and capable of being hooked to said upright frames when not in use.

4. A collapsible carrier comprising an open base frame, collapsible upright frames hinged to the corners of said base frame, detachable flexible sides secured to said base and upright frames, bracing plugs associated with said upright frames and the base corners, said upright frames having curved ends at the base, said curved ends serving to prevent backward movement of said upright frames when in open position, and also serving to hold same in upright position by permitting the use of said bracing plugs, said plugs being inserted through said upright frames and the base by means of perforations at said curved ends through said upright frames, and perforations through the end portions of the base corners.

In testimony whereof I affix my signature in presence of two witnesses.

HARRY SCHER.

Witnesses:
ROBERT LONGYEAR,
GUSTAV BERGMAN.

**Copies of this patent may be obtained for five cents each, by addressing the "Commissioner of Patents, Washington, D. C."**

Correction in Letters Patent No. 1,231,654.

It is hereby certified that in Letters Patent No. 1,231,654, granted July 3, 1917, upon the application of Harry Scher, of New York, N. Y., for an improvement in "Collapsible Carriers," an error appears in the printed specification requiring correction as follows: Page 1, line 32, for the word "at" read *to;* and that the said Letters Patent should be read with this correction therein that the same may conform to the record of the case in the Patent Office.

Signed and sealed this 14th day of August, A. D., 1917.

[SEAL.]

R. F. WHITEHEAD,

*Acting Commissioner of Patents.*

Cl. 150—49.