Oct. 27, 1942. V. E. CARLSON 2,300,204

SUCTION CLEANER

Filed April 17, 1939 2 Sheets-Sheet 1

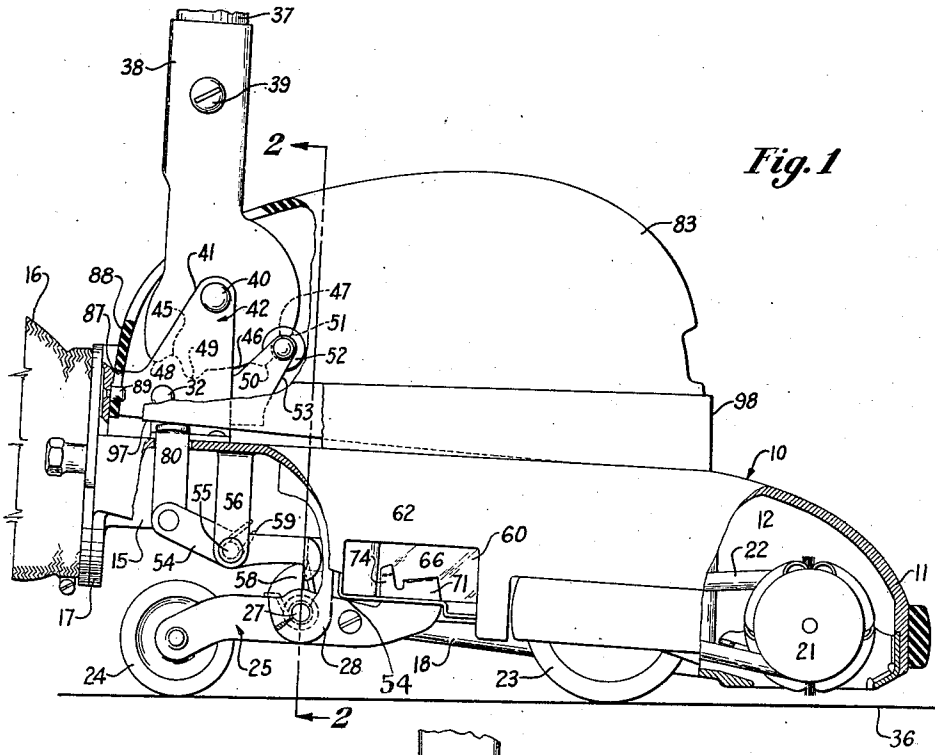

Fig. 1

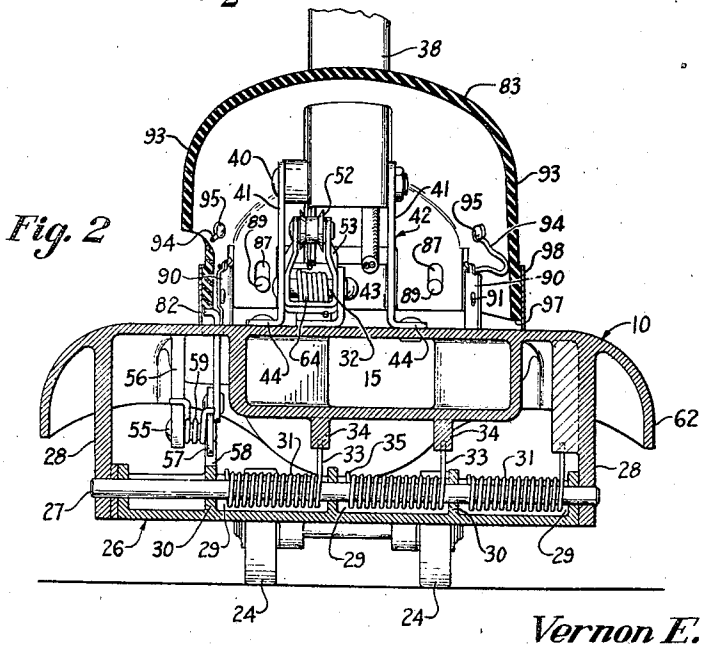

Fig. 2

INVENTOR

Vernon E. Carlson

BY

Harry S. Ducas

ATTORNEY

Oct. 27, 1942. V. E. CARLSON 2,300,204

SUCTION CLEANER

Filed April 17, 1939 2 Sheets-Sheet 2

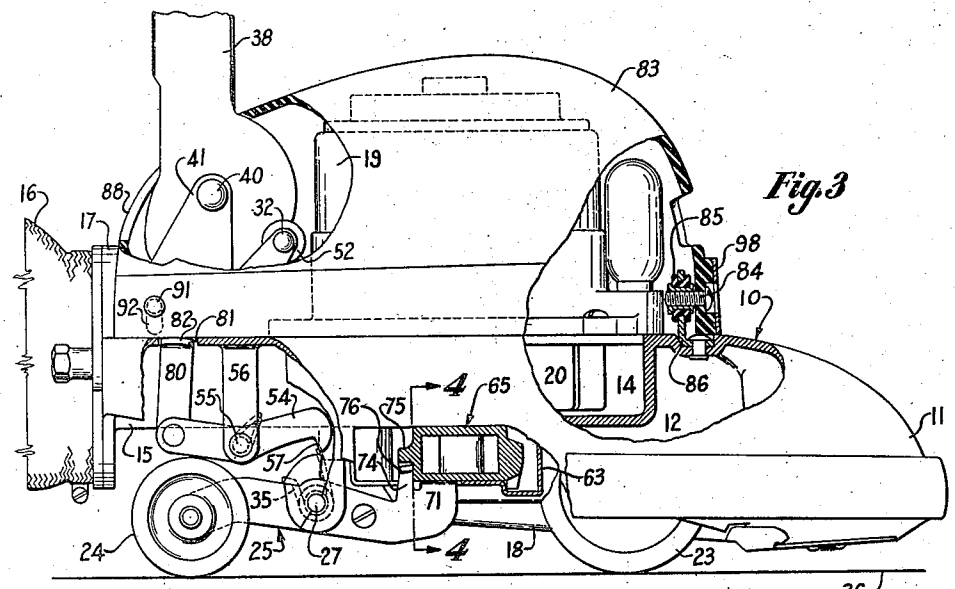

Fig. 3

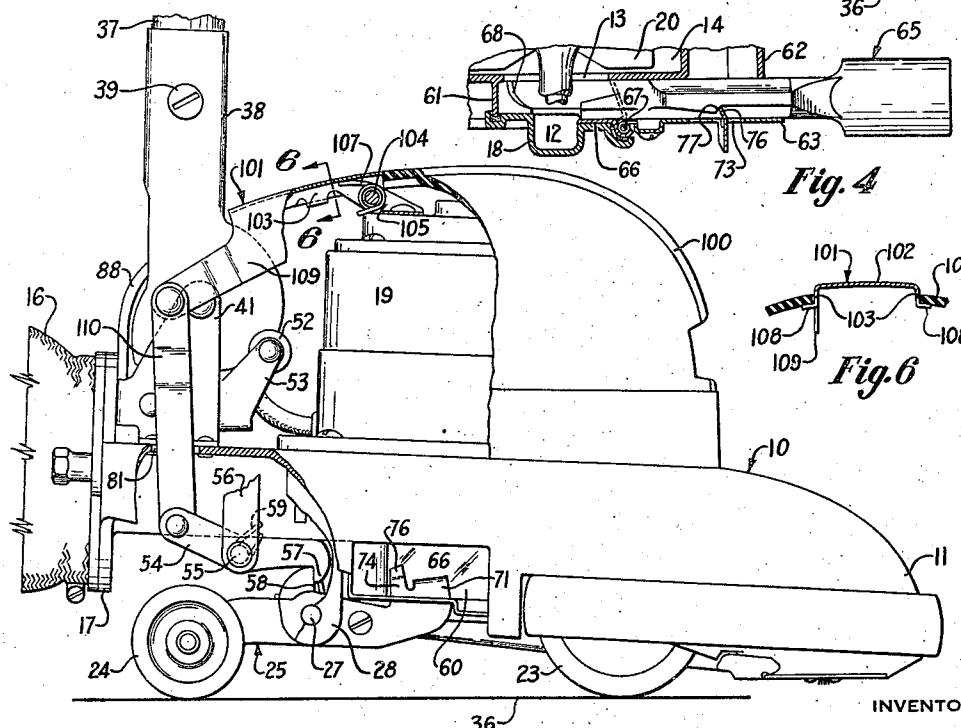

Fig. 5

Fig. 4

Fig. 6

INVENTOR

Vernon E. Carlson

BY

Harry D. Edwards

ATTORNEY

Patented Oct. 27, 1942 2,300,204

UNITED STATES PATENT OFFICE

2,300,204

SUCTION CLEANER

Vernon E. Carlson, Canton, Ohio, assignor to The Hoover Company, North Canton, Ohio, a corporation of Ohio

Application April 17, 1939, Serial No. 268,180

18 Claims. (Cl. 15—9)

The present invention relates to suction cleaners and particularly to new and improved mechanism for maintaining a constant nozzle clearance with respect to the floor covering being cleaned irrespective of movement of the handle to different operating positions and for converting the cleaner to off-the-floor cleaning position.

It is an object of the present invention to provide a new and improved suction cleaner. It is another object to provide common means for maintaining proper nozzle clearance during on-the-floor cleaning and for effecting conversion for off-the-floor cleaning. A further object is to provide means for maintaining constant nozzle floor clearance upon movement of the handle to different operating positions. Another object of the invention is to provide means in the motor housing for converting the cleaner from on-the-floor to off-the-floor cleaning positions. Further objects and advantages of the invention will be apparent upon referring to the following specification and claims and the attached drawings, wherein:

Figure 1 is a side elevation of a suction cleaner with parts broken away to show one embodiment of the invention;

Figure 2 is a section along the line 2—2 of Figure 1;

Figure 3 is a side elevation similar to Figure 1 but showing the nozzle elevated and the converter in position for off-the-floor cleaning;

Figure 4 is a section along the line 4—4 of Figure 3;

Figure 5 is a side elevation with parts broken away showing another embodiment of the invention; and

Figure 6 is a section along the line 6—6 of Figure 5;

One embodiment of the invention is disclosed in a suction cleaner shown in Figures 1 to 4 and comprising a main casing 10 provided with a suction nozzle 11 communicating with an air passageway 12 extending to a fan eye 13 at the entrance to a fan chamber 14 communicating with an exhaust passageway 15 discharging into a dust bag 16 attached to a vertical flange 17 at the extreme end of the exhaust passageway 15. A bottom cover plate 18 is detachably secured to the casing 10 to form therewith the air passageway 12. Supported on the casing 10 is a motor 19 which operates a fan 20 to create suction and draw dirt-laden air from the surface being cleaned through the nozzle 11 and air-passageway 12 into the fan chamber 14, and discharges the dirt-laden air through the exhaust passage 15 into the dust bag 16. An agitator 21 is journaled in the nozzle 11 and is rotated by a belt 22 extending through the air passageway 12 to an unshown pulley arranged on the motor armature shaft. The cleaner is supported on front and rear wheels 23 and 24 respectively, the former being journaled on the casing 10 and the latter on a rear caster assembly 25.

The rear caster assembly 25 comprises an elongated hollow beam 26 which extends transversely beneath the rear end of the casing 10 and is journaled for limited rocking movement on a shaft 27 supported at its outer ends by a pair of arms 28 depending integrally from the casing 10. The hollow beam 26 is of semi-cylindrical contour and is divided longitudinally of its length into compartments 29 formed by transverse webs 30. Disposed in three of the compartments 29 are torsion springs 31, which are coiled about the shaft 27, and each spring has one end 33 anchored against a stop 34 depending integrally from the underside of the casing 10, and the opposite end 35 of each spring exerts pressure upon the beam 26 in the direction to rotate the rear caster 25 counter-clockwise on its supporting shaft 27, as viewed in Figures 1 and 3. This arrangement of springs operates to support the normal cleaner weight transmitted to the rear wheels, and to raise the rear portion of the casing to tilt the nozzle 11 downwardly to maintain a proper nozzle clearance with the surface to be cleaned.

The cleaner is propelled over the floor covering 36 by a handle 37 which is removably secured in a split socket 38 by a nut and bolt connection 39. The handle socket 38 is journaled on a pivot pin 40 which is rigidly supported in the side walls 41 of the handle bracket 42 the rear wall 43 of which is secured to the exhaust flange 17, and the lower portions 44 of the handle bracket side walls are mounted on the cleaner casing above the exhaust passageway 15. One of the side walls of the handle socket 38 extends below the pivotal axis 40 and is provided with segmental means having a plurality of recesses 45, 46 and 47 defined by projections 48, 49, 50 and 51 which limit the range of movement of the handle in different operating positions. Adapted to engage the segment means is a detent means including a roller detent 52 journaled on a lever 53 pivotally mounted on a pin 32 supported at its opposite ends in he handle bracket 42. A torsion spring 54 is arranged about the pin 32 and urges the roller detent 52 into engagement with the segmental surface to resist-

ingly maintain the handle in its adjusted position.

When the handle is mounted at the rear end of the cleaner casing 10, downward movement of the handle causes the casing to pivot about the shaft 27, the nozzle 11 moving upwardly away from the floor covering which consequently disturbs the proper clearance required between the nozzle and the floor covering for efficient cleaning. This upward tilting of the nozzle and downward movement of the rear end of the casing is caused by the pressure exerted on the handle to move the segmental projections 49 and 50 past the roller detent 52 to change the operating range of the handle. In order to prevent pivotal movement of the casing 10 about the shaft 27, I have provided a locking mechanism which comprises a lever 54 pivotally mounted on a pin 55 supported on a member 56 integral with the casing 10, the forward end of the lever being provided with an offset lip 57 which normally engages a member 58 formed integrally with one of the transverse webs 30 on the caster beam 26. A torsion spring 59 is arranged around the pin 55 and tends to hold the lip 57 in locking engagement with the member 58. When the lever 54 is locked with respect to the rear caster 25 and the handle 37 is moved downwardly so that segmental projections 49 or 50 are forced past the roller detent 52, the rear end of the cleaner is prevented from squatting closer to the floor covering, and the nozzle clearance with respect to the floor covering is maintained uniform throughout the cleaning operation irrespective of the movement of the handle.

The foregoing locking mechanism is also employed in converting the cleaner from on-the-floor to off-the-floor cleaning positions. The cleaner is adapted for off-the-floor cleaning by providing a converter port or passageway 60 which extends transversely of the casing from an opening in a wall 61 of the casing 10 adjacent the fan eye 13 to the outer skirt 62 of the casing 10. The passageway 60 is formed by a plate 63 cooperating with the bottom of the casing 10. The opening at the inner end of the passageway 60 is normally closed by means of a spring actuated gate valve 66 pivotally mounted along its lower edge on a pin 67 to swing downwardly and inwardly from its vertical closed position shown in dotted lines in Figure 4 to its open position shown in full lines.

The passageway 60 is adapted to receive a converter member 65 which is permanently or detachably connected at one end to an unshown dusting tool hose and has a flat inner end portion 68 which completely traverses the passageway 12 at the eye of the fan chamber, thus closing off the air passageway 12 and diverting the incoming air stream from the dusting tool hose directly into the eye of the fan chamber.

The converter passageway 60 is normally partially closed by a barrier 71 which is rigidly secured to the rear caster assembly 25 so as to move therewith when the latter is pivoted about the shaft 27. The forward end of the barrier 71 extends through a slot 73 in the member 63 and intersects the converter passageway 60 as shown in Figure 1. The barrier is provided with a detent 74 on which the longitudinal rib 75 of the converter 65 rides so as to properly position the latter in the passageway 60. The curved end 76 of the detent 74 engages the depending lug 77 on the converter to lock the latter in the converter passageway 60.

In order to convert the cleaner from its normal on-the-floor cleaning position shown in Figure 1 to off-the-floor cleaning position shown in Figure 3, I have provided a link 80 which is pivoted to the locking lever 54 and extends upwardly through a slot 81 in the casing 10 and is provided at its upper end with a laterally offset lip 82. The link 80 is actuated by a motor housing 83 pivotally mounted at its front end by a bolt and nut connection 84 secured in a resilient block 85 carried by a bracket 86 mounted on the casing 10. Fixed to the exhaust flange 17 is a pair of pins 89 which project through elongated slots 87 formed in the rear wall 88 of the motor housing, whereby the latter is properly positioned on the casing 10 and yet permits movement of the rear end of the motor housing about the pivotal connection 84. A band 98 extends around the lower end of the motor housing to the exhaust flange 17 and is rigidly mounted on the top wall of the casing 10. A pair of substantially L-shaped members 90 are formed integrally with the band 98 toward the rear ends thereof, and the upright portions of the members 90 extend within the motor housing 83. Removably mounted on the members 90 are bolts 91 which extend through elongated slots 92 in the motor housing 83 and through confined openings in the band 98. A pair of springs 94 have one end secured at 95 to the inner wall of the motor housing and have their opposite ends abutting the upright members 90 so as to normally tilt the motor housing upwardly about its pivotal axis 84 to maintain the lower defining edge 97 at the rear of the motor housing in spaced relation from the top wall of the casing 10. The band 98 covers the open space between the lower edge 97 of the motor housing and the casing. When the motor housing is depressed it actuates the link 80 which unlocks the lever 54 from the rear caster 25, and when the housing abuts the casing 10, further downward pressure on the housing is transmitted directly to the casing 10 and causes the latter to pivot counter-clockwise about the shaft 27 as viewed in Figure 1 to raise the nozzle 11 from the floor covering and also removes the barrier 71 from the passageway 60 to permit insertion of the converter 65 for off-the-floor cleaning.

In operation, assume the cleaner is being employed for on-the-floor cleaning and the handle 37 is in normal cleaning position, that is, roller detent 52 is in the segmental recess 46 and the barrier arm 71 forming part of the caster 25 abuts the converter housing 63 as indicated at 54 in Figure 1. If the operator desires to move the handle to a lower position he exerts pressure downwardly on the handle and causes the projection 49 to pass over the roller detent 52 against the force exerted by the spring 64, whereby the detent 52 is disposed in the recess 45 to thereby maintain the handle in low operating position.

The force exerted on the handle to move the projection 49 over the roller detent 52 normally causes the cleaner casing to pivot counter-clockwise about the shaft 27 as viewed in Figure 1, and thereby disturbs the proper nozzle clearance between the nozzle 11 and the floor covering. However, such rotation is prevented by the lever 54 which is in locking engagement with the member 58 forming part of the rear caster 25. Accordingly, the nozzle clearance with re-

spect to the floor covering is not altered by moving the handle into different operating positions.

If it is desired to convert the cleaner to off-the-floor cleaning position to employ the usual dusting tools, it is first necessary to clear the barrier 71 from the converter passageway 60. This is done by the operator placing one hand on the top of the motor housing 83 adjacent the handle 37 and pressing downwardly on the motor housing against the force exerted by the springs 94. Downward pressure on the motor housing causes the latter to move about its pivotal axis 84 and relatively to the band 98 and the casing 10. Upon downward movement of the motor housing the lower defining edge 97 of the latter actuates the link 80 which pivots the locking lever 54 counter-clockwise about the pin 55, as viewed in Figure 1, to release the lever 54 from locking engagement with the member 58 on the rear caster 25, whereby the casing 10 is free to pivot with respect to the caster 25.

Continued downward movement of the motor housing causes the latter to abut the casing 10 whereby the pressure exerted by the hand of the operator is directly transmitted to the casing 10, causing the latter to pivot counter-clockwise about the shaft 27 as viewed in Figure 1. Depression of the rear end of the casing 10 simultaneously raises the nozzle 11 and removes the barrier 71 from the converter passageway 60. The converter 65 may now be inserted in the passageway 60, provided the detent 74 engages the rib 75 on the converter, whereby the latter may be advanced further to abut the valve 66 and cause it to swing downwardly into the position shown in Figure 4. When the converter is in its final position its forward end seals the front half of the fan eye whereby air may be drawn through the dusting tools into the fan chamber and discharged into the dust bag.

Once the converter has been inserted in the passageway 60 it is no longer necessary to hold down the rear end of the cleaner since the detent 76 on the barrier contacts the underside of the converter member, as shown in Figure 3, and holds the nozzle 11 in raised position from the floor covering. With the converter in final position the shoulder 77 abuts the detent 76 on the barrier to lock the converter member in position.

Upon completing the off-the-floor cleaning operations, the cleaner is restored to its normal operating condition, by depressing the rear portion of the motor housing to release the converter member so that it may be withdrawn from the passageway 60. When the operator removes his hand from the motor housing the springs 94 pivot the latter upwardly to its normal position and the torsion springs 31 raise the rear end of the cleaner and pivot the nozzle 11 downwardly to its proper nozzle clearance with respect to the floor covering, and the lever 54 engages the member 58 to lock the caster 25 with respect to the cleaner casing.

Another embodiment of the invention is shown in Figures 5 and 6 and includes the mechanism hereinbefore described with the exception of the means for actuating the locking member 54 to convert the cleaner for off-the-floor cleaning.

In this embodiment a motor housing 100 is mounted stationary on the casing 10 and is provided with a panel 101 forming part thereof. The panel 101 has a top wall 102 depending side walls 103, the forward ends of which are journaled on a pin 104 supported on a bracket 105 mounted on the top of the motor frame 19. A torsion spring 107 is arranged about the pin 104 and pivots the panel 101 in a clockwise direction as viewed in Figure 5, whereby the panel closes the opening in the motor housing. The side walls 103 of the panel are provided with lips 108 which engage the motor housing to limit upward movement of the panel 101. Formed integrally with the panel 101 is a rearwardly extending arm 109 to which is pivotally connected a link 110 pivoted at its opposite end to the locking lever 54.

To convert the cleaner for off-the-floor cleaning the panel 101 is moved downwardly about its pivot 104 which actuates the link 110 and thereby releases the lever 54 from the caster 25. Thereafter pressure exerted on the panel 101 or motor housing proper pivots the casing 10 counter-clockwise about the shaft 27 as viewed in Figure 5, to raise the nozzle 11 and remove the barrier 71 from the passageway 60 to permit insertion of the converter member 65.

The cleaner is restored to on-the-floor cleaning position by depressing the rear portion of the cleaner to release the converter member, and thereafter downward pressure is removed from the cleaner permitting the torsion springs 31 to raise the rear end of the cleaner, the lever 54 locking the caster 25 with respect to the casing 10 and the spring 107 moving the panel 101 to close the opening in the motor housing 100.

I claim:

1. In a suction cleaner, a casing having a port adapted to receive a converter member to convert the cleaner for off-the-floor cleaning, barrier means movably mounted on said casing and normally positioned to obstruct the entrance to said port, a motor housing mounted on said casing and having at least a part thereof movable with respect to the cleaner motor and operatively connected to said barrier means, said part of said motor housing being movable with respect to said motor upon exerting pressure thereon to unlock said barrier means for movement from said obstructing position in said port.

2. In a suction cleaner, a casing having a port adapted to receive a converter member to convert the cleaner for off-the-floor cleaning, barrier means movably mounted on said casing and normally locked to obstruct the entrance to said port, a motor housing mounted on said casing, panel means forming part of said motor housing and operatively connected to said barrier means and movable with respect to the cleaner motor, said panel means being movable with respect to the cleaner motor upon exerting pressure thereon to unlock said barrier means for removal of the latter from said obstructing position in said port.

3. In a suction cleaner, a casing having a port adapted to receive a converter member to convert the cleaner for off-the-floor cleaning, barrier means movably mounted on said casing and normally locked to obstruct said port, a motor housing movably mounted on said casing and operatively connected to said barrier means, said motor housing being movable with respect to said casing upon exerting pressure thereon to unlock said barrier means and for effecting removal of the latter from said obstructing position in said port.

4. In a suction cleaner, a casing having a port adapted to receive a converter member to con-

vert the cleaner for off-the-floor cleaning, a spring pressed wheel carrying bracket pivotally mounted on said casing and adapted to support said casing against depression under normal load conditions, barrier means operated by said bracket and normally positioned to obstruct said port, but shiftable from said port obstructing position when sufficient pressure is exerted on said casing to move the latter with respect to said bracket, means for locking said bracket with respect to said casing, and means movable with respect to the cleaner motor for releasing said locking mechanism to permit said movement of said casing with respect to said bracket.

5. In a suction cleaner, a casing having a port adapted to receive a converter member to convert the cleaner for off-the-floor cleaning, a spring pressed wheel carrying bracket pivotally mounted on said casing and adapted to support said casing against depression under normal load conditions, barrier means operated by said bracket and normally positioned to obstruct said port, but shiftable from said port closing position when sufficient pressure is exerted on said casing to move the latter with respect to said bracket, means for locking said bracket with respect to said casing, a motor housing movably mounted on said casing and having at least a part thereof operatively connected to said locking means, movement of at least said part of said housing relatively to said casing releasing said locking means and further movement of said housing engaging said casing to move the latter with respect to said bracket to remove said barrier means from said port obstructing position.

6. In a suction cleaner, a casing having a port adapted to receive a converter member to convert the cleaner for off-the-floor cleaning, a spring pressed wheel carrying bracket pivotally mounted on said casing and adapted to support said casing against depression under normal load conditions, barrier means forming part of said bracket and normally positioned to obstruct said converter port, but shiftable from said port obstructing position when sufficient pressure is exerted on said casing to move the latter with respect to said bracket, means for locking said bracket with respect to said casing, a motor housing mounted on said casing, panel means forming part of said motor housing and operatively connected to said locking means, said panel means being movable upon exerting pressure thereon to release said locking means to permit said movement of said casing with respect to said bracket.

7. In a suction cleaner, a casing having a port adapted to receive a converter member to convert the cleaner for off-the-floor cleaning, a spring pressed wheel carrying bracket pivotally mounted on said casing and adapted to support said casing against depression under normal load conditions, barrier means operatively connected to said bracket and normally obstructing said converter port, means for locking said bracket with respect to said casing, a motor housing movably mounted on said casing and normally spaced from the latter and connected to said locking means, movement of said housing relative to said casing releasing said locking means, and further movement of said housing engaging said casing to move the latter with respect to said bracket to remove said barrier means from said port obstructing position.

8. In a suction cleaner, a casing having a port adapted to receive a converter member to convert the cleaner for off-the-floor cleaning, handle control means for resistingly supporting a handle in different operating positions, the handle being movable to different operating positions by exerting a force thereon, a spring pressed wheel carrying bracket pivotally mounted on said casing and adapted to support said casing against depression under normal load conditions, locking means engaging said bracket to prevent relative movement between the latter and said casing when said force is exerted on said handle during normal on-the-floor cleaning, means for releasing said locking means to permit movement of said casing with respect to said bracket, and barrier means forming part of said bracket and normally positioned to obstruct said converter port, but shiftable from said port obstructing position when said casing is moved with respect to said bracket.

9. In a suction cleaner, a casing having a port adapted to receive a converter member to convert the cleaner for off-the-floor cleaning, a spring pressed wheel carrying bracket pivotally mounted on said casing and adapted to support said casing against depression under normal load conditions, handle control means for resistingly supporting said handle in different operating positions, said handle being movable to different operating positions by exerting a force thereon, locking means to engage said bracket to prevent relative movement between the latter and said casing when said force is exerted on said handle, a motor housing mounted on said casing and having at least a part thereof operatively connected to said locking means, said part of said motor housing being movable relative to said casing upon exerting pressure thereon to release said locking means to permit said movement of said casing with respect to said bracket, and barrier means forming part of said bracket and normally positioned to obstruct said converter port, but shiftable from said port obstructing position when said casing is moved with respect to said bracket.

10. In a suction cleaner, a casing including suction-creating means, a nozzle communicating with said suction-creating means, an opening communicating with said suction-creating means adapted to receive a converter for off-the-floor cleaning, bracket means pivotally mounted on said casing, wheels carried by said bracket means, tension means acting on said casing and bracket means to counterbalance the normal weight of the cleaner, latch means normally operating to prevent said casing moving towards said wheels, said latch means being released by application of external force at the rear of said casing to tilt said casing towards said wheels, and a barrier connected to said bracket means and normally obstructing said converter opening, said barrier being moved out of said opening upon said release of said latch means and said tilting of said casing toward said wheels to permit insertion of said converter.

11. In a suction cleaner, a cleaner casing, a motor on said casing, a spring pressed wheel carrying bracket pivotally mounted on said casing and adapted to support said casing against depression under normal load conditions, means for locking said casing with respect to said wheel bracket during movement of said cleaner over the surface being cleaned, a motor housing for said motor and having at least a part thereof operatively connected to said locking means, and movable with respect to said motor to release said locking means to permit movement of said casing with respect to said bracket.

12. In a suction cleaner, a casing having a nozzle, a spring pressed wheel carrying bracket movably mounted on said casing and adapted to support said casing against depression under normal load conditions to maintain said nozzle at uniform floor clearance, a handle pivotally mounted on said casing, handle control means for resistingly supporting said handle in different operating positions, cooperating locking means on said casing and wheel bracket to prevent relative movement therebetween when said handle is moved to different operative positions whereby said nozzle is maintained at a uniform floor clearance, and a motor housing on said casing and having at least a part thereof movable for releasing said locking means to permit relative movement between said casing and wheel bracket.

13. In a suction cleaner, a casing having a nozzle, a wheel bracket movably mounted on said casing to support the latter, a handle pivotally mounted on said casing and movable to different operative positions, locking means to prevent relative movement between said wheel bracket and casing when said handle is moved to different operative positions whereby said nozzle is maintained at uniform floor clearance, a motor housing on said casing, and movable panel means forming part of said motor housing and operatively connected to said locking means, said panel means being movable to release said locking means to permit movement of said casing with respect to said wheel bracket.

14. In a suction cleaner, a casing having a nozzle and a port adapted to receive a member to convert the cleaner for off-the-floor cleaning, a wheel bracket movably mounted on said casing to support the latter, a handle pivotally mounted on said casing and movable to different operative positions, barrier means normally locked to obstruct the entrance of the converter member into said port, locking means to prevent relative movement between said wheel bracket and casing when said handle is moved to different operative positions whereby said nozzle is maintained at uniform floor clearance and to hold said barrier means in said port obstructing position, a motor housing on said casing, and movable panel means forming part of said motor housing and operatively connected to said locking means, movement of said panel means releasing said locking means to permit removal of said barrier means from port obstructing position and relative movement between said casing and wheel bracket.

15. In a suction cleaner, a cleaner casing, a wheel bracket movably mounted on said casing to support the latter, means for locking said casing with respect to said wheel bracket during movement of said casing over the surface being cleaned, a motor housing on said casing, and movable panel means forming part of said motor housing and operatively connected to said locking means, movement of said panel means releasing said locking means to permit movement of said casing with respect to said wheel bracket.

16. In a suction cleaner, a casing having a nozzle and a port adapted to receive a member to convert the cleaner for off-the-floor cleaning, a wheel bracket movably mounted on said casing to support the latter, a handle pivotally mounted on said casing and movable to different operative positions, barrier means normally obstructing the entrance of the converter member into said port, locking means to prevent relative movement between said wheel bracket and casing when said handle is moved to different operative positions whereby said nozzle is maintained at uniform floor clearance and to hold said barrier means in said port obstructing position, a motor housing movably mounted on said casing and operatively connected to said locking means, movement of said motor housing releasing said locking means to permit removal of said barrier means from said port obstructing position and relative movement between said casing and wheel bracket.

17. In a suction cleaner, a casing having a nozzle, a wheel bracket movably mounted on said casing to support the latter, a handle pivotally mounted on said casing and movable to different operative positions, locking means to prevent relative movement between said wheel bracket and casing when said handle is moved to different operative positions whereby said nozzle is maintained at uniform floor clearance, a motor housing movably mounted on said casing and operatively connected to said locking means, movement of said motor housing releasing said locking means to permit relative movement between said casing and wheel bracket.

18. In a suction cleaner, a cleaner casing, a wheel bracket movably mounted on said casing to support the latter, means for locking said casing with respect to said wheel bracket during movement of said casing over the surface being cleaned, a motor housing movably mounted on said casing and operatively connected to said locking means, movement of said motor housing releasing said locking means to permit movement of said casing with respect to said wheel bracket.

VERNON E. CARLSON.