(No Model.)

J. KILBURN.

SPINDLE BEARING.

No. 590,317. Patented Sept. 21, 1897.

FIG. 2.

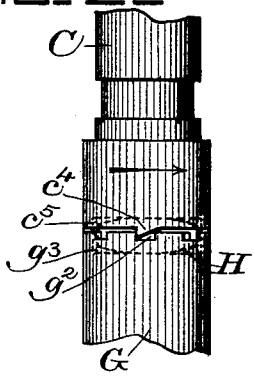

FIG. 1.

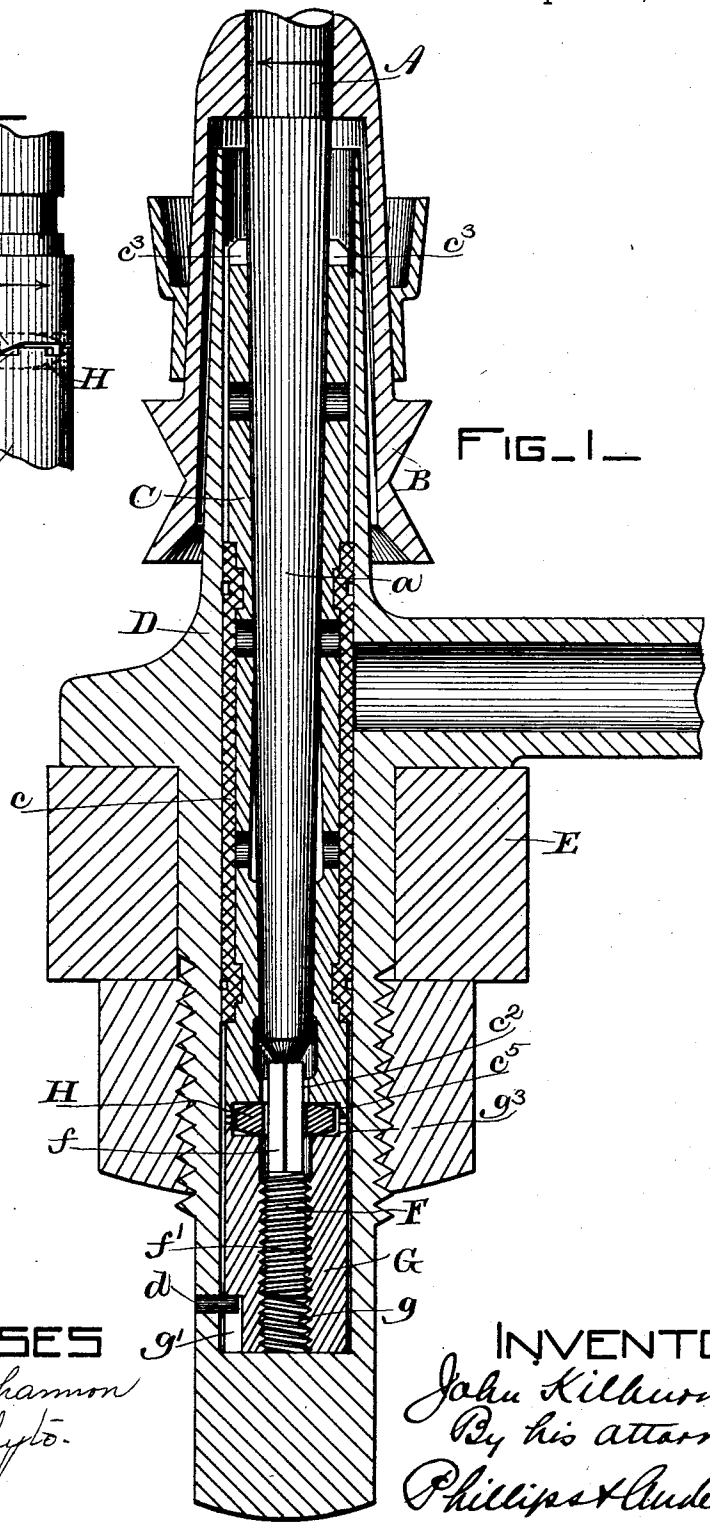

WITNESSES

M. E. Shannon

O. A. Phillips.

INVENTOR

John Kilburn

By his attorneys,

Phillips & Anderson.

THE NORRIS PETERS CO., PHOTO-LITHO., WASHINGTON, D. C.

UNITED STATES PATENT OFFICE.

JOHN KILBURN, OF BELMONT, MASSACHUSETTS.

SPINDLE-BEARING.

SPECIFICATION forming part of Letters Patent No. 590,317, dated September 21, 1897.

Application filed December 2, 1896. Serial No. 614,253. (No model.)

To all whom it may concern:

Be it known that I, JOHN KILBURN, a citizen of the United States, residing at Belmont, in the county of Middlesex and State of Massachusetts, have invented certain new and useful Improvements in Spindle-Bearings; and I do hereby declare the following to be a full, clear, and exact description of the invention, such as will enable others skilled in the art to which it appertains to make and use the same.

The present invention relates to spindles of the type known as "self-centering" or "top" spindles, in which the rotating spindle is adapted to seek its true center of rotation under an unbalanced load. These spindles are commonly made with a tapered pintle or stem, which is supported and rotates in a tapering bearing in a bolster, the end of the pintle resting upon a support termed a "step." In practice the rapid rotation of the spindle causes the end of its pintle to wear away or to wear into the step and to thus fall farther into the bearing in the bolster, the tapered pintle binding in the inclined or tapered bearing in the bolster, increasing the friction and retarding the rotation of the spindle. The difficulty above noted has been obviated by adjusting the step and bolster relatively to each other to bring the bearing or step higher into the bearing of the bolster, to thus raise the pintle of the spindle to accommodate for the wearing away thereof, as above described. I am aware that it has heretofore been proposed in the art to accomplish such relative adjustment by a rotation of the bolster, which by means of a threaded connection between the bolster and step either raises the step in the bolster or lowers the bolster upon the step, but in all such devices, in so far as I am at present advised of the art, before any rotation of the bolster can be accomplished to secure such an adjustment the bolster must be first lifted or depressed in the bolster-case to release it from its locking devices.

The object of the present invention is to produce a device in which the bolster is positively restrained from rotation only in the direction of rotation of the spindle, being free to be rotated in an opposite direction without a preliminary lifting or depressing of the same in the bolster-case.

To the above end the present invention consists of the devices and combination of devices hereinafter described and claimed.

Figure 1 shows a central vertical section, enlarged, through a spindle-support embodying the same, the lower end of the spindle and other parts being shown in elevation; and Fig. 2 shows a side elevation of portion of the bolster and the pintle-sleeve.

In the drawings, A represents the spindle, having the usual tapered end or pintle *a* and carrying the usual whirl B.

C represents the bolster, D the bolster-case, and E the spindle-rail, all of which parts, except as hereinafter specified, may be of any convenient and usual construction.

The bolster C is preferably surrounded by the usual wicking or packing *c* and is interiorly tapered to form a bearing, within which the spindle-pintle *a* is adapted to rotate.

F represents a pintle, the top of the upper portion *f* of which forms the step or support upon which the spindle-pintle *a* rests while rotating.

The pintle F is arranged to be vertically movable to adjust the step within the bolster and it is arranged to be adjusted without removing the bolster or step from the bolster-case.

To accomplish the above-suggested result, I have devised the form and arrangement of parts shown in the drawings, which illustrate a preferred form of the present invention.

Within the bolster-case D is placed what I term a "pintle-sleeve" G, which is secured against rotary movement in said case by a pin *d*, driven through an aperture in the wall of said case and engaging a slot *g'* in said pintle-sleeve.

The pintle-sleeve G has an interiorly-threaded bearing *g*, which receives the threaded end *f'* of the pintle F and in which the pintle F is adapted to be turned to impart a vertical movement thereto to adjust the step, as before suggested. The upper portion *f* of

the pintle F is shown as polygonal in cross-section, but it may be of any desired shape other than round, and it is adapted to be engaged by an aperture in the lower end of the bolster C to turn the pintle F in the pintle-sleeve G to move it vertically to adjust the step, as before suggested.

The bolster C has an aperture c^2 in the lower end, of a shape similar to the shape in cross-section of the upper portion f of the pintle F, but somewhat larger, in order that the bolster may not be restrained from the gyrating movement which is developed by the efforts of the rotating spindle supported therein to find its true center of rotation under an unbalanced load. The aperture c^2 is of such size relatively to the upper portion f of the pintle F that when the bolster C is rotated it will engage and turn the pintle F and by means of the threaded connection of pintle F with the pintle-sleeve G impart to said pintle a vertical movement, thus raising the step, as before suggested.

For the purpose of turning the bolster C to adjust the step the upper end of the bolster is conveniently provided with the notches c^3, which are adapted to be engaged by a screw-driver or other convenient tool.

In the form of my invention shown in the drawings the bolster C is positively restrained from rotation in the direction of rotation of the spindle A, but is free to rotate in an opposite direction to secure the adjustment of the step as hereinbefore described, a result which I secure by a suitably-placed controlling or clutch mechanism, conveniently the following:

Upon the lower end of the bolster C, conveniently adjacent to its periphery, are formed a series of downwardly-projecting teeth c^4, of unequal inclination upon opposite sides, conveniently beveled upon one side and perpendicular upon the other. The teeth c^4 are arranged to engage with a series of notches g^2, formed upon the top of the pintle-sleeve G, which is restrained from rotation by the pin d, as hereinbefore stated. The notches g^2 are preferably rectangular in shape, or of a corresponding shape and opposite bevel to the teeth c^4, the arrangement being such that when the bolster C is rotated in an opposite direction to that in which the spindle rotates the teeth c^4 will turn over the notches g^2, but when effort is made to rotate the bolster in the opposite direction the teeth c^4 engage the notches g^2 and restrain the rotation of the bolster. As shown in the drawings, the spindle A is arranged to rotate in the direction of the arrow-head in Fig. 1 and the bolster C to rotate in an opposite direction, as indicated by the arrow-head in Fig. 2.

In this class of spindles it is essential that the bolster should have slight lateral play to enable the spindle to center itself under an unbalanced load, a result which I secure as follows: Upon the lower end of the bolster C is formed a preferably circular recess c^5, and below the same, in the top of the pintle-sleeve G, a similar recess g^3, the recesses c^5 and g^3 forming a chamber within which I locate what I have termed a "rocker-washer" H, which supports the bolster C and rests upon the pintle-sleeve G. The rocker-washer H preferably consists of a washer with rounded or convex faces loosely fitted to the upper portion f of the pintle F. The rocker-washer H supports the bolster C at such distance above the pintle-sleeve G that the teeth c^4 do not bottom in the notches g^2, and since, as before stated, the bolster C loosely engages the upper portion of the pintle F the bolster C is by the arrangement described left free to gyrate or wabble upon the rocker-washer H.

The operation of my invention has been sufficiently described in connection with the foregoing description of its form and arrangement of parts. It will be noted, however, in this connection that in order to raise the step in the bolster the operator is not obliged to remove the bolster from the case or to raise it from its position in the case, but can accomplish such adjustment by a simple rotation of the bolster by means of a screw-driver or other tool, a result which, in so far as I am advised of the prior art, has never heretofore been accomplished, and which greatly facilitates the operation of adjustment.

I claim—

1. The combination with a spindle and its bolster, of a clutch mechanism arranged to restrain the rotation of the bolster in the direction of rotation of the spindle and to permit its rotation in an opposite direction, substantially as described.

2. The combination with a bolster-case, bolster and bolster-support within the case, of a threaded bearing in the support, a threaded pintle engaging said bearing and projected into the bolster, and connections between the bolster and pintle, whereby a rotation of the bolster effects a longitudinal movement of the pintle, substantially as described.

3. The combination with a bolster and its support, of a pintle longitudinally movable in the support, and a rocker-washer surrounding the pintle between the bolster and its support, substantially as described.

4. The combination with the bolster and its support, of teeth formed upon the lower end of the bolster and notches formed upon the top of the support, said teeth being arranged to engage with, but not to bottom in said notches, substantially as described.

5. The combination with the spindle and its bolster, of means for restraining the rotation of the bolster in the direction of rotation of the spindle, arranged to permit its rotation in an opposite direction, and a step vertically adjustable within the bolster by the rotation of the bolster, substantially as described.

6. The combination with the bolster supported upon its bottom face, a step-pintle engaging said bolster, and arranged to be moved longitudinally within the bolster by a rotation of the bolster, of inclined teeth upon the bolster and engaging devices therefor arranged to permit a rotation of the bolster in one direction and restrain it from rotation in the opposite direction, substantially as described.

In testimony whereof I affix my signature in presence of two witnesses.

JOHN KILBURN.

Witnesses:
A. E. WHYTE,
A. O. ORNE.