United States Patent [19]

Folberth

[11] **3,888,379**

[45] **June 10, 1975**

[54] **PALLET DISTRIBUTION CAGE**

[75] Inventor: **Fred G. Folberth,** Stroudsburg, Pa.

[73] Assignee: **Banner Metals Division Intercole Automation, Inc.,** Compton, Calif.

[22] Filed: **July 15, 1974**

[21] Appl. No.: **488,736**

[52] **U.S. Cl.** ..... **220/4 F;** 220/7; 220/1.5; 217/43 A

[51] **Int. Cl.** **B65d 7/00**

[58] **Field of Search** ..... 220/4 F, 4 R, 6, 7, 1.5, 220/19; 217/43 A, 65

[56] **References Cited**

UNITED STATES PATENTS

2,975,929	3/1961	Sjoblom	220/1.5 X
3,349,939	10/1967	Averill	220/6

Primary Examiner—William I. Price
Assistant Examiner—Steven M. Pollard
Attorney, Agent, or Firm—Jessup & Beecher

[57] **ABSTRACT**

A cage-like structure is provided which is intended to be removably mounted on a storage pallet, skid, dolly or other supporting base, to constitute a container for goods on the base. The structure includes a gripping foot bracket assembly at each of its lower corners. The gripping foot bracket is composed of a pair of interconnected sections, one of the sections being slidably mounted to the adjacent side of the structure, so as to be drawn into a tight gripping relationship with the edge of the pallet when the sides are moved down toward the plane of the load supporting surface of the base. The structure also includes a hinged end panel and movable locking clamps of a unique construction for holding the panel in a closed condition. The sides of the structure are also intercoupled by the locking clamps which permit each panel to be rigidly coupled to the adjacent panels, and yet to be easily separated from the adjacent panels when the structure is removed from the base.

4 Claims, 4 Drawing Figures

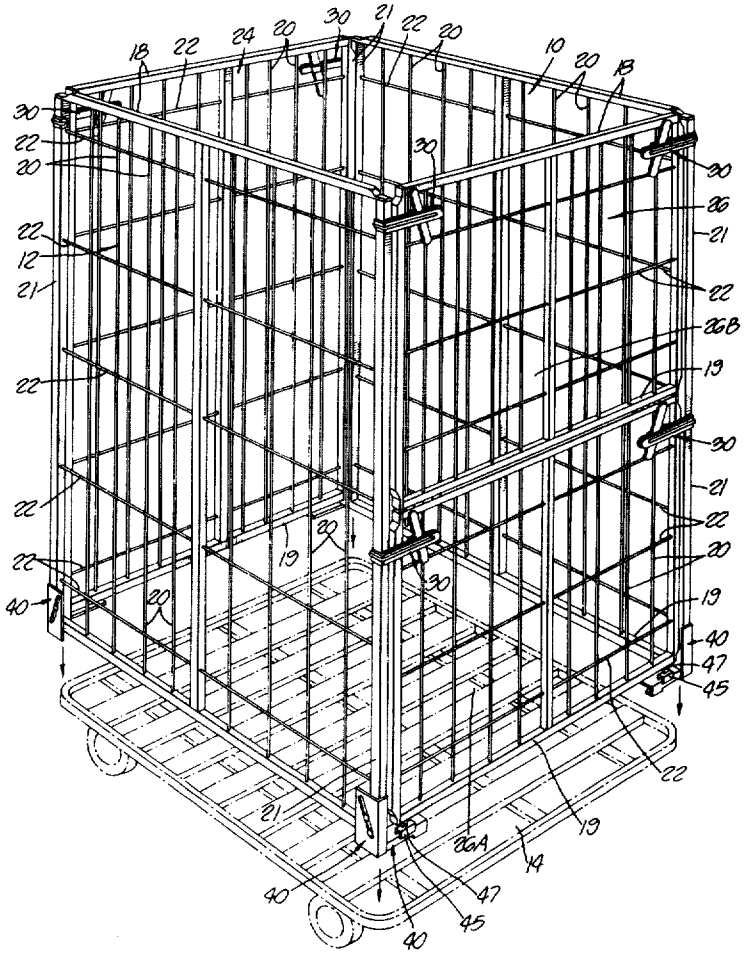

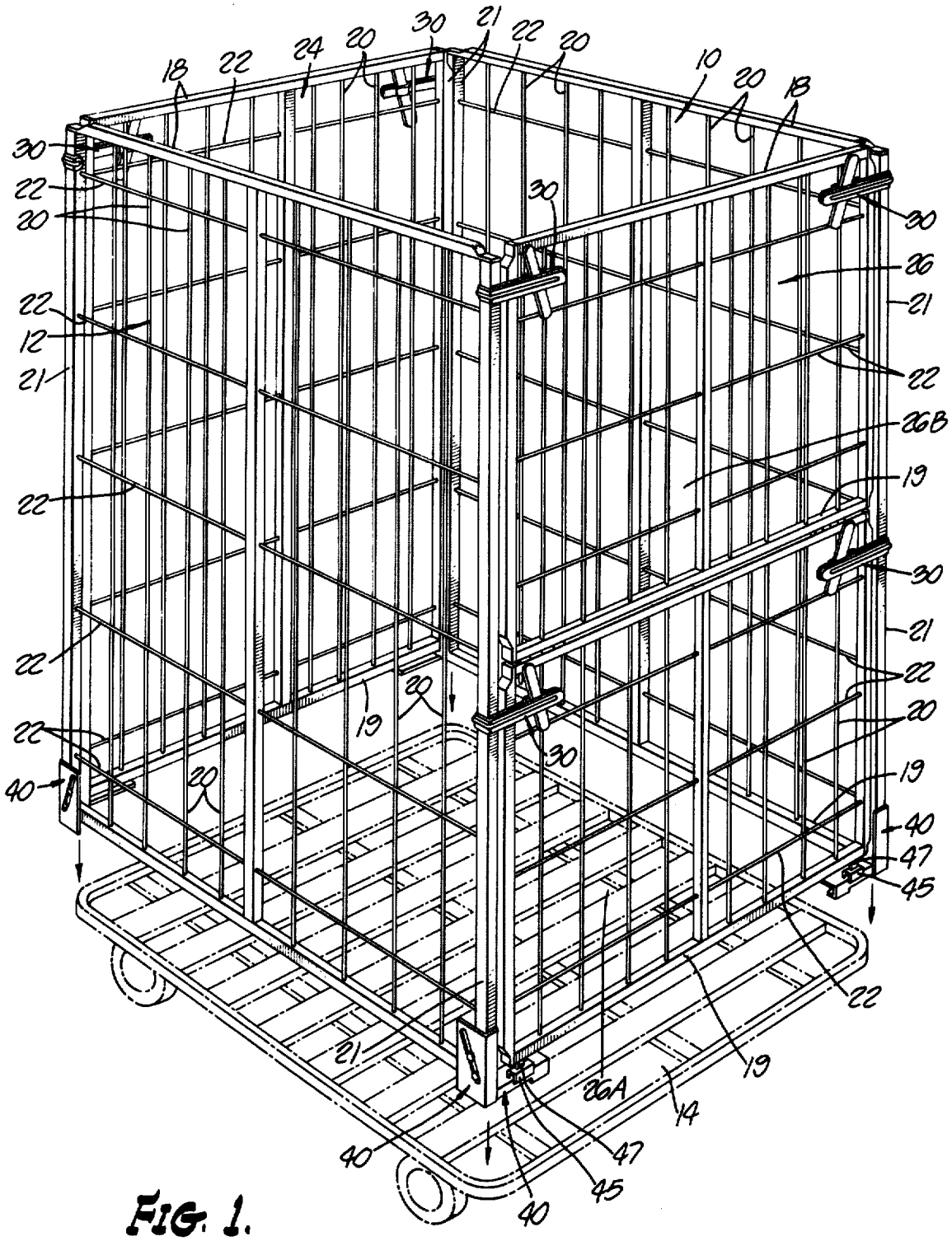
18
22
24
20
30
21
22
20
10
20
18
30
22
20
30
30
26
21
22
12
21
22
26B
19
22
30
21
22
22
20
19
20
22
30
40
20
19
40
47
45
22
21
19
26A
14
40
47
45
40

FIG. 1.

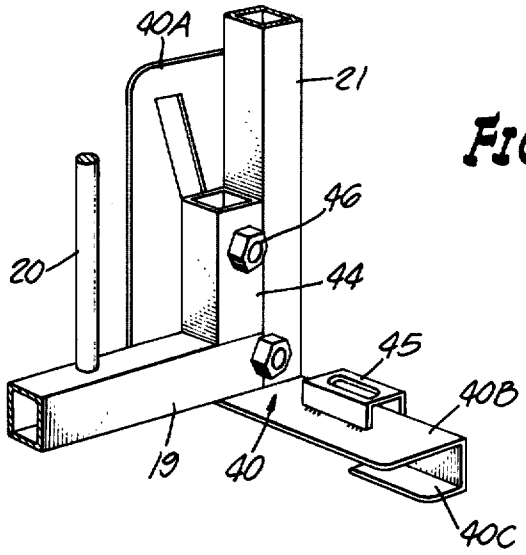

FIG. 2.

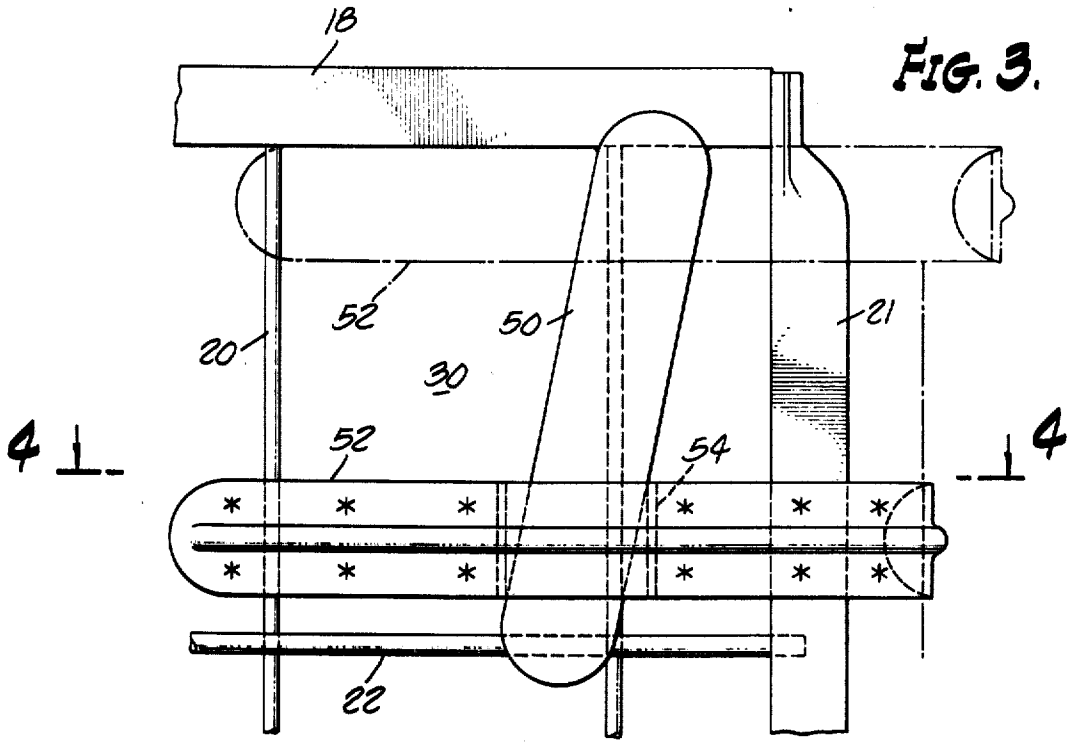

FIG. 3.

FIG. 4.

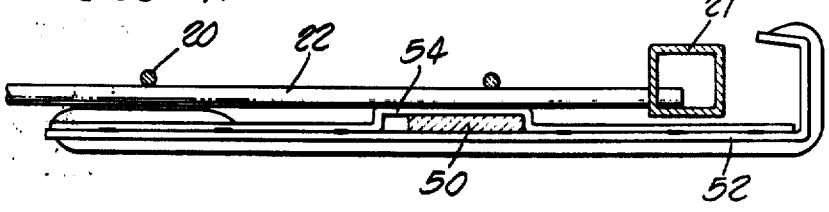

PALLET DISTRIBUTION CAGE

BACKGROUND OF THE INVENTION

Pallets are presently in widespread use in warehouses, and in other places, for supporting loads of goods for transportation from one location to another, either within the warehouse or to distant points. One reason for the widespread use of the pallet is that it supports its load up from the floor of the warehouse, so that the forks of a fork lift truck, or the like, may be easily slipped under its load supporting surface in order that the pallet and its load may be conveniently lifted up for movement from one point to another.

In order to widen the field of use of such pallets, it is usual in the prior art to provide walls which may be removably mounted on the pallet to form a bin or container for the goods carried thereby. The present invention is concerned with such a structure, and it provides a cage-like assembly which is composed of individual wall panels removably locked to one another, and which may easily and conveniently be clamped to the peripheral edge of the pallet to provide a rigid and stable container, and yet which may be easily removed from the pallet and which may be easily disassembled.

A feature of the structure of the invention is the provision of a hinged section on one of the walls to permit access to the container. In accordance with the invention, the hinged section is held in a closed position by unique movable gravity locking clamps which are conveniently moved down into locking positions, as will be described.

BRIEF DESCRIPTION OF THE DRAWINGS

FIG. 1 is a perspective representation of one embodiment of the cage-like structure of the invention in its assembled condition on a dolly;

FIG. 2 is an enlarged perspective detailed representation of a foot bracket assembly, one of which is mounted at each lower corner of the structure, and which serve to hold the structure firmly clamped onto an associated pallet;

FIG. 3 is an enlarged detailed representation of one of a plurality of locking clamp assemblies which are used in the structure of FIG. 1; and

FIG. 4 is a section taken along the line 4—4 of FIG. 3.

DETAILED DESCRIPTION OF THE ILLUSTRATED EMBODIMENT

The cage-like structure of the present invention, as shown in FIG. 1 includes a pair of side panels **10** and **12** which are supported in spaced parallel relationship when the structure is assembled and in place on a pallet, such as the illustrated pallet **14**. The side panels **10** and **12** may be similar in their construction, and each may include a top tubular member **18** and a bottom tubular member **19**, welded to a pair of side tubular members **21** to form a closed rectangular shape, as shown. A plurality of wires **20** extend upwardly across the area enclosed by the tubular members, and are welded to the tubular members **18** and **19**. A plurality of further wires **22** extend across and are spot welded to the wires **20**, and the wires **22** are welded to the side tubular members **21** to constitute shelf supports.

The structure also includes an end panel **24** and an end panel **26**. The end panel **26**, for example, may include a lower section **26*a*** and an upper section **26*b*** hinged to one another, so that the upper section **26*b*** may be turned down to provide an access gate to the interior of the structure. The end panels may have generally the same structure of the side panels, and each may include upper and lower tubular members **18** and **19**, side tubular members **21**, and wires **20**.

The side panels described above are intercoupled to one another by means of a plurality of gravity clamp assemblies **30**. The clamp assemblies **30** may each have the form shown in FIGS. **3** and **4**. Each clamp assembly, as shown in FIG. **4** includes a diagonal clamp slide **50** which is welded to the adjacent upper tubular member **18** and horizontal wire **22**. A gravity clamp **52** is supported on the slide **50** by means of a guide **54**. The guide **54** is welded to the rear slide of the clamp **52**, as best shown in FIG. **4**. The clamp **52**, has a hook-shaped configuration, as also shown in FIG. **4**.

By means of the clamp assemblies **30**, the side panels and end panels of the assembly are held rigidly together and the access gate is held closed, when the structure is in the assembled condition of FIG. **1**. Yet, the access gate may be easily opened, and the panels may be easily disassociated from one another, merely be moving the gravity clamps upwardly to release them from their hooking engagement of FIG. **3**, as shown by the shadow representation in FIG. **3** of the clamp **52**.

A foot bracket assembly **40** is provided at each of the lower corners of the structure. The foot bracket assembly is shown in more detail in FIG. **2**, and, as illustrated, it includes a plate-like section **40*a*** having a diagonal slot therein, and it also includes a second section **40*b***, with an integral flange **40*c***. A short rectangular tubular member **44** is welded, or otherwise attached to the tubular members **19** and **21**. A carriage bolt **46** extends through the member, and its head is received in the slot in section **40*a***. The relationship is such that as the side panels **10** and **12** are moved down towards the plane of the pallet, the bolt **46** rides down the diagonal slot so that the flange **40*c*** is drawn inwardly into a firm clamping relationship with the pallet, and the structure is firmly and rigidly held on the pallet.

A socket **45** is provided on the top of section **40*b*** which is engaged by a hook in the underside of the corresponding lower tubular member **19**, so that the end panels **24** and **26** may be hooked in place on the foot brackets.

The invention provides, therefore, an improved, simple and inexpensive cage for use in conjunction with a pallet, to provide a container for goods carried by the pallet. The elements of the cage-like structure are intercoupled to one another by similar locking brackets, as described, and further similar locking brackets are used to clamp the structure to the edge of the pallet. An access door is provided, which is held in closed condition by a gravity clamp type of latch, and further similar locking assemblies.

It will be appreciated that although a particular embodiment of the invention has been shown and described, modification may be made. It is intended to cover such modifications in the following claims.

What is claimed is:

1. A cage-like structure adapted to be removably secured to the peripheral edge of a rectangular pallet, said structure including: a pair of side panels spaced and parallel to one another; a pair of end panels spaced and parallel to one another; and a plurality of locking

brackets secured to respective ones of said panels at the adjacent edges thereof, each of said locking brackets including an inclined clamp slide member secured to one of the panels, and a gravity clamp mounted in sliding engagement with said clamp slide member and having a hooked end portion engaging the edge of the adjacent panel.

2. The combination defined in claim **1,** and which includes a plurality of foot brackets secured to said panels at the lower corners thereof; each of said foot brackets having a flanged section and each of said foot brackets being mounted in an angular sliding relationship with the one of the adjacent panels, so that downward movement of such panel draws said flanged section into gripping relationship with the adjacent edge of the pallet.

3. The combination defined in claim **1,** in which one of said panels includes an upper section and a lower section hinged to one another, and a pair of said locking brackets being secured to said upper section to hold it in a closed and locked position.

4. The combination defined in claim **2,** in which each of said foot brackets includes locking means for securing the lower edge of the other of the adjacent panels thereto.

* * * * *