April 24, 1956 R. E. J. NORDQUIST 2,743,001

CAN DIVIDER

Filed Dec. 10, 1954 2 Sheets-Sheet 1

Fig. 1

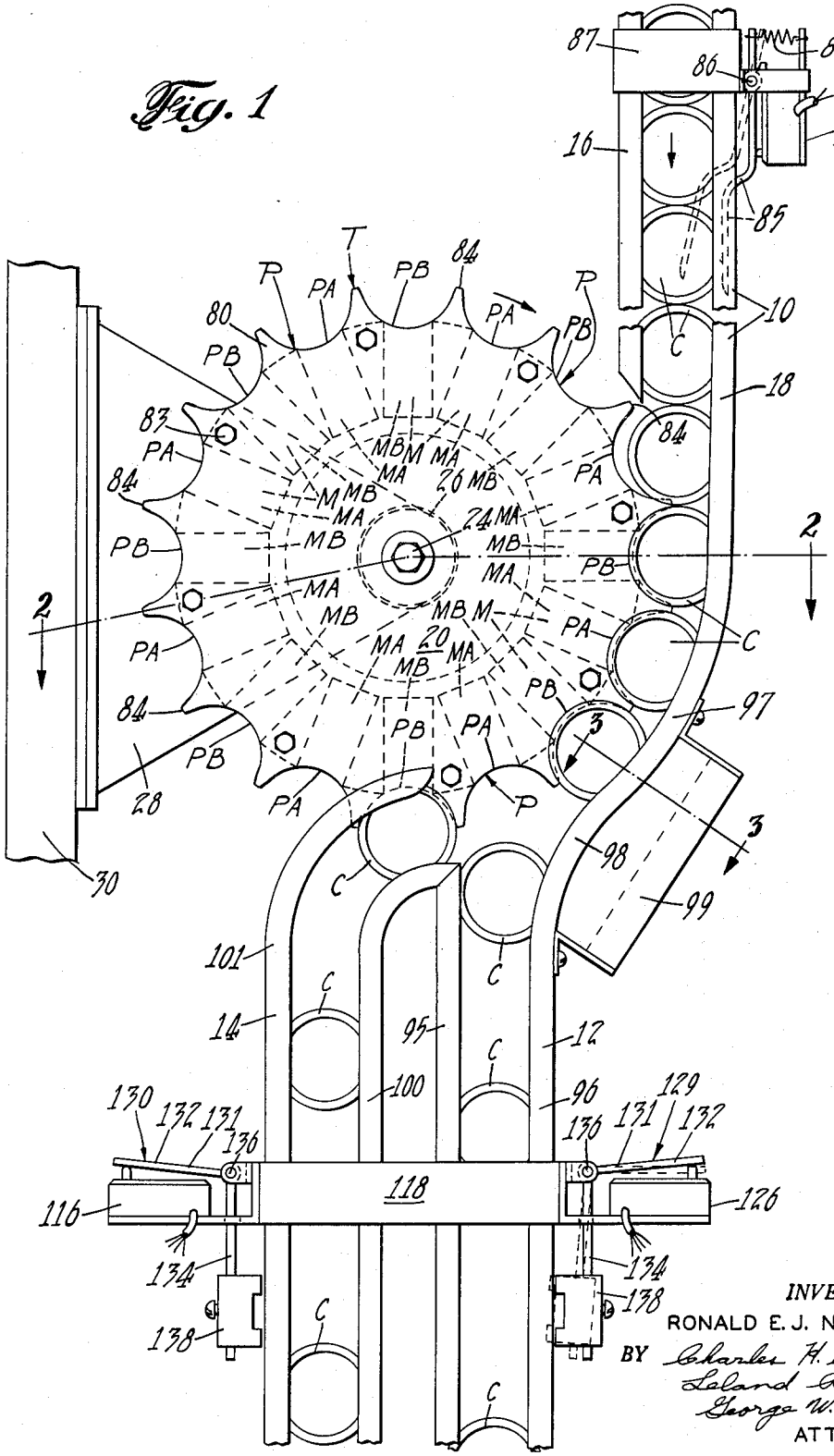

INVENTOR.
RONALD E. J. NORDQUIST
BY Charles H. Byrne
Leland R. McCann
George W. Reiber
ATTORNEYS

April 24, 1956 R. E. J. NORDQUIST 2,743,001

CAN DIVIDER

Filed Dec. 10, 1954 2 Sheets-Sheet 2

Fig. 2

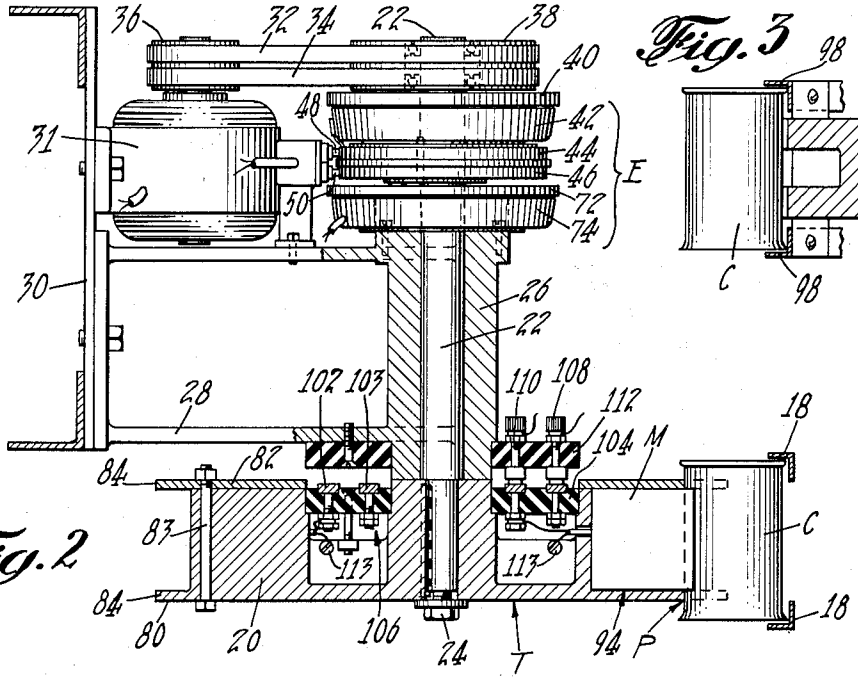

Fig. 3

Fig. 4

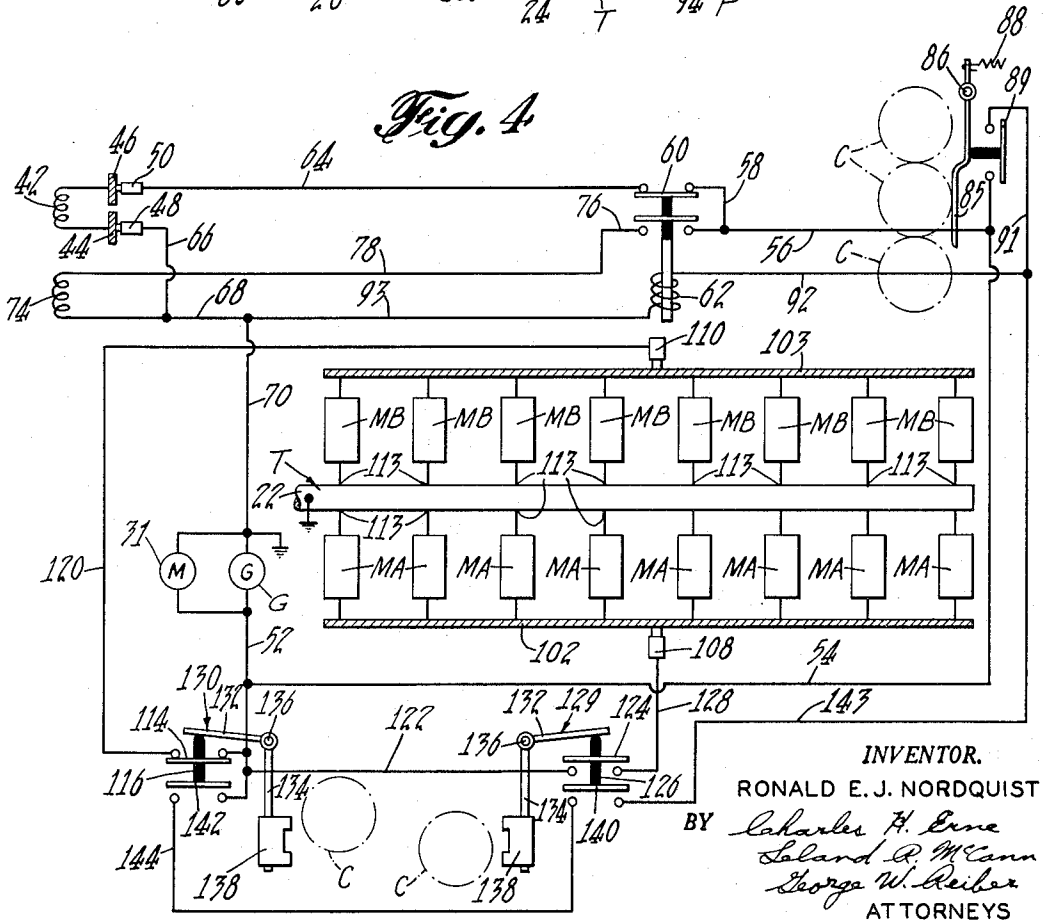

INVENTOR.
RONALD E. J. NORDQUIST
BY Charles H. Ernst
Leland R. McCann
George W. Reiber
ATTORNEYS

United States Patent Office 2,743,001 Patented Apr. 24, 1956

2,743,001

CAN DIVIDER

Ronald E. J. Nordquist, Summit, N. J., assignor to American Can Company, New York, N. Y., a corporation of New Jersey

Application December 10, 1954, Serial No. 474,498

10 Claims. (Cl. 198—66)

The present invention relates to can line control devices, and more particularly to a can divider which incorporates an electromagnetic rotary turret for selectively distributing cans received from a single runway to a plurality of runways.

There are numerous situations in the can making industry where a single line of cans must be divided into several lines. A typical example exists where cans received from a machine having a high output must be delivered to a plurality of machines which operate at slower speeds. Another exists in the bulk loading of cans in freight cars where a single row of cans is delivered to the centrally disposed car loading door for distribution to both ends of the car so that loading can be effected simultaneously at both ends of the car. The present invention provides a can dividing device which can be used advantageously in such and other instances.

An object of the present invention is the provision of a magnetic can divider which operates to effectively distribute cans from a single inlet runway to a plurality of outlet runways, the cans normally being divided according to a desired pattern which is, however, automatically altered in response to an abnormal condition in any of the runways.

Another object is the provision of a can divider which incorporates a rotary electromagnetic can dividing turret which maintains a smooth and free flow of cans from the inlet runway to the outlet runways with a minimum of jarring and damage to the cans.

Another object of the invention is the provision of such a can dividing mechanism wherein changes in the can distribution pattern may be automatically and smoothly effected without stopping the rotation of the electromagnetic turret as long as at least one outlet runway is capable of receiving additional cans.

Numerous other objects and advantages of the invention will be apparent as it is better understood from the following description, which, taken in connection with the accompanying drawings, discloses a preferred embodiment thereof.

Referring to the drawings:

Figure 1 is a side elevation of a can divider embodying the instant invention, parts being broken away;

Fig. 2 is a sectional view taken substantially along the line 2—2 in Fig. 1, with parts broken away and parts shown in section;

Fig. 3 is a fragmentary sectional detail taken substantially along the line 3—3 in Fig. 1, with parts broken away; and

Fig. 4 is a wiring diagram of the electrical apparatus used in the mechanism.

As a preferred or exemplary embodiment of the present invention the drawings illustrate a mechanism for receiving a single line of magnetizable cans C from a single inlet chute or runway **10** and dividing them into two lines which are discharged through a pair of outlet chutes or runways **12** and **14**.

The cans C are fed from any suitable source of supply through the gravity runway **10**, which preferably is conventionally formed of two pairs of angle iron guide rails **16** and **18** which confine the ends of the cans C to maintain or guide the cans in a predetermined path of travel. As the cans C leave the inlet runway **10**, they are received in a rotating turret, generally designated by the letter T, which carries them through a short arcuate path of travel and then divides them between the outlet runways **12** and **14** which are disposed adjacent the bottom of turret T. As seen in Figs. 1 and 2, the rotating turret T includes a main body member **20** which is keyed to one end of a shaft **22** and held thereon against outward movement by a bolt **24**. The shaft **22** is journalled in a bearing **26** which is formed in a bracket **28** bolted to an upright standard **30** which forms the main support for the dividing mechanism.

The shaft **22** preferably is driven by a motor **31** which is wired to a suitable source of electrical energy, such as a D. C. generator G (see Fig. 4). A pair of drive belts **32, 34** transmit the rotary motion of a motor pulley **36** to a free running pulley **38** which is mounted on the turret shaft **22**. The pulley **38** preferably is coupled to the shaft **22** through the medium of a combination electromagnetic clutch and brake unit (see Fig. 2) which is generally designated by the numeral E. The unit E is of conventional, commercially available design and may be of the type manufactured by the Warner Electric Brake and Clutch Company of Beloit, Wisconsin. Details of construction of essential elements of the unit E are disclosed in J. G. Oetzel Patent 2,554,874, issued May 29, 1951, on Magnetic Friction Element.

The clutch section of the unit E is normally energized during operation of the mechanism and comprises an armature disc **40** which is secured to and rotatable with the free running pulley **38**, and an electromagnet **42** which is keyed to the shaft **22** and is provided with a pair of collector rings **44, 46** and brushes **48, 50**.

During normal operation of the mechanism, current is supplied to the clutch magnet **42** to maintain the turret T in continuous rotation. This current in the clutch circuit flows from the D. C. generator G (see Fig. 4) through wires **52, 54, 56, 58**, a normally closed contact **60** of a control relay **62**, a wire **64**, brush **50**, and collector ring **46**, then passes through the magnet **42** and returns to the generator G through collector ring **44**, brush **48**, and wires **66, 68** and **70**.

The brake section of the unit E comprises an armature disc **72** (Fig. 2) which is secured to the shaft **22** and a stationary magnet **74** which is bolted to the bracket **28**. The brake magnet **74** is of course normally deenergized but is incorporated in a brake circuit which includes the generator G, wires **52, 54, 56**, a normally open contact **76** of the relay **62**, wire **78**, the magnet **74**, and wires **68, 70**. The operation of the control relay **62** will be hereinafter explained.

The turret body **20** (see Fig. 2) is provided on one side with an annular integral flange **80** and has an annular plate **82** secured to its opposite side by bolts **83**. The turret flange **80** and the plate **82** are scalloped at equally spaced intervals to form semi-circular can receiving pockets P (see also Fig. 1) which extend around the periphery of the turret T and are separated from each other by toothlike spurs **84**. The radius of curvature of each of the pockets P preferably is slightly in excess of that of the cans C in order to prevent binding of the cans as they are received from the inlet runway **10** and discharged into the outlet runways **12** and **14**.

A solid head of cans C is preferably maintained in the inlet chute **10** above the turret T in order to insure that the cans are properly positioned for reception in the turret pockets P. If this is not done, randomly fed incoming cans may be crushed by the pocket spurs **84**.

To maintain this head of cans C, provision is made for stopping the rotation of the turret T whenever the solid row of cans C in the runway **10** drops below a desired level. For this purpose, a feeler finger **85** (see Figs. 1 and 4) is pivotally mounted at **86** on a runway bracket **87**, a suitable distance above the turret T.

The finger **85** is held in its outward position by the incoming cans C as long as there are cans in the runway **10** at this level. When the level of the cans C drops below the finger **85**, a spring **88** moves the finger **85** into the runway between the guide rails **18**, as shown in broken lines in Fig. 1, thereby closing a normally-open contact **89** of a switch **90** and establishing a can feed-in control circuit (see Fig. 4) which energizes the relay **62** to open the clutch circuit contact **60** and close the brake circuit contact **76**, thereby stopping the rotation of the turret until such time as the level of the cans C in runway **10** again builds up.

The can feed-in control circuit includes the generator G, the wires **52** and **54**, the contact **89**, wires **91** and **92**, the relay **62**, and wires **93** and **70**. If desired, a suitable time delay device may be incorporated in this feed-in control circuit to prevent too-frequent actuation of the control relay **62** as a result of spasmodic inflow of small groups of cans C into the runway **10**.

Each pocket P of turret T is provided with an electromagnet M (Fig. 2) which is seated in a recess **94** formed in the turret body **20**, and which, when energized, holds the can C in the pocket until it is positively stripped therefrom. The turret body **20** and the plate **32** are made of nonmagnetic material in order to limit the field of attraction of each magnet M to its associated pocket P.

In order to provide for the desired division of cans C between the outlet runways **12** and **14**, the electromagnetic pockets P are electrically divided into two separate sets, one of which, hereinafter designated by the letter A, is normally maintained in a deenergized condition while the other set, designated by the letter B, is normally energized. For the sake of clarity, the pockets P and magnets M of the normally deenergized set A will hereinafter be referred to as PA and MA, respectively, while those of the normally energized set B will be referred to as PB and MB.

The outlet runways **12** and **14** are similar in construction to the inlet runway **10**, the inner side of runway **12** comprising a pair of spaced guide rails **95** while its outer side is formed by downward extensions **96** of the inlet runway guide rails **18**. Between the runways **10** and **12**, each rail **18** is formed with an arcuate section **97** which extends concentrically with the periphery of the turret T to prevent the cans C in the demagnetized pockets PA from falling out until they reach the runway **12**. The arcuate section **97** merges into a reversely curved section **98** which curves gradually away from the turret T to the mouth of the runway **12**, thereby permitting these unmagnetized cans to drop out of the pockets PA and enter runway **12**. An elongated, U-shaped permanent magnet **99** (see Figs. 1 and 3) is secured between the rail sections **98** in order to insure that the cans C in the demagnetized pockets PA enter runway **12**.

The cans in the energized pockets PB are retained in these pockets and carried across the upper end of outlet **12** and delivered to the second outlet runway **14**, which is composed of spaced sets of rails **100** and **101**. The outer rails **101** extend upwardly to straddle the lowermost portion of the turret T and positively strip the cans C from energized pockets PB. Since the magnetic attraction of each of the electromagnets M is greater than that of the permanent magnet **99**, no cans will be discharged from the energized pockets PB into outlet runway **12**.

It will be obvious that the composition of the pocket sets A and B can be varied to suit the various conditions which may be encountered during the operation of the dividing mechanism. Thus, if more cans are required in runway **12** than in runway **14**, more pockets can be included in set A than in set B. Furthermore, the pockets of one set may be grouped together, or may alternate with the pockets of the other set.

In the illustrated embodiment of the invention, sixteen pockets are provided in the turret T and these are equally divided between sets A and B with the pockets of set A alternating regularly with those of set B. As a result, the cans are alternately fed into the runways **12** and **14** and are equally divided therebetween.

The electrical hookup of the magnets of sets A and B can be readily seen by referring to Figs. 2 and 4. In order to electrically separate the two sets, two collector rings **102**, **103** are mounted on an insulating ring **104** which is set into an annular recess **106** formed in the turret body **20**. A pair of cooperating brushes **108**, **110** is mounted in a second insulating ring **112** which is secured to the bracket **28**. One lead of each magnet MA is connected to collector ring **102** while one lead of each magnet MB is connected to collector ring **103**. The other lead of each magnet in both sets is grounded through the turret body **20** as at **113**.

Thus, current flows from the D. C. generator G to the normally energized magnet set B through wire **52**, thence through a normally closed contact **114** of a double contact switch **116** which is mounted on a bracket **118** adjacent the runway **14** (see Fig. 1) thence through a wire **120** to the brush **110**. Here it passes into the collector and ring **103**, thence through the magnets of set B and returns to the grounded side of the generator G.

The electrical circuit for the normally deenergized magnet set A is similar to that of set B, and includes the wire **52**, a wire **122**, a normally open contact **124** of a double contact switch **126** which is mounted on the bracket **118** adjacent the runway **12**, a wire **128**, the brush **108** and collector ring **102**.

Since the contacts **114** are normally closed and the contacts **124** normally open, it follows that magnet set B is normally energized and magnet set A is normally deenergized. However, an abnormal condition in either or both runways **12** and **14** may frequently be encountered which makes it imperative to temporarily stop the flow of cans into one or both of these runways. Such a condition may occur when the mechanism being supplied by one of these runways stops operating, thus causing the cans in the runway to backpile. When such a condition occurs in only one of the runways, it is desirable to divert all of the cans from the turret T into the other runway. To provide for this, a pair of detector devices **129**, **130** (see Figs. 1 and 4) is provided adjacent the outlet runways **12**, **14**. Each such device consists of a bell crank **131** having a horizontal arm **132** and a vertical arm **134**. The bell cranks **131** are pivotally mounted at **136** to position their horizontal arms **132** over the plungers of the switches **126** and **116** (see Fig. 1). A vertically adjustable permanent magnet **138** is secured to each vertical arm **134** so that it is positioned closely adjacent the path of travel of the cans C, being disposed between the outer guides **96** and **101** of the chutes **12** and **14**, respectively.

The magnet **138** of each detector is adjusted so that there is no substantial movement of the bell crank **131** as long as the cans are moving in the runway in spaced relationship. However when a runway becomes filled with cans, the magnetic field becomes intensified sufficiently to cause the magnet **138** to move towards the cans C, thus swinging the vertical arm **134** inwardly and pressing the horizontal arm **132** downwardly against the plunger of its associated switch **116** or **126**, as the case may be, thereby changing the position of the switch contacts.

As a consequence, when runway **12** becomes filled with cans, the detector device **129** operates to close the contacts **124** of the switch **126**. This switch operating position of detector device **129** is shown is broken lines in Fig. 1. As a result, magnet set A becomes energized, and since magnet set B is already energized, all of the

cans C are carried past the runway **12** and deposited in runway **14**. Similarly, when runway **14** becomes filled, detector device **130** operates to open the normally closed contacts **114**, thereby deenergizing the magnet set B and causing all cans to be deposited in runway **12**. Such changes in the normal condition of the magnet sets A and B are, of course, only temporary, and the normal distribution pattern is restored as soon as the runways are cleared, thus permitting the switch contacts **114**, **124** to resume their normal positions.

In the event both runways **12** and **14** become filled with cans, it is necessary to completely stop the flow of cans from the inlet runway **10**. In the present embodiment of this invention, this is accomplished by stopping the turret T. To do this, a normally open second set of contacts **140**, **142** of the switches **126**, **116** respectively, are wired into the control circuit of relay **62** in parallel with the runway switch contact **89**. This parallel relay control circuit includes the wire **52** which leads from one side of the generator G, the contacts **142** of switch **116**, wire **144**, the contacts **140** of the switch **126**, wires **143**, **92**, the relay **62**, wire **93** and the wire **70** which leads back to the other side of the generator G. When both runways **12** and **14** are filled, the normally open contacts **140**, **142** are closed by the action of the detectors **129**, **130** and the parallel relay control circuit is completed, thus energizing the relay **62**, thereby opening the clutch contacts **60** and closing the brake contacts **76** to stop the rotation of the turret and the feeding of cans. This parallel relay control circuit is of course broken as soon as the condition of one of the runways **12**, **14** returns to normal.

It should be understood that other types of devices for determining when the runways **12**, **14** are filled may be substituted for the magnetic detector devices **129**, **130**. Other usable types include photo-electrically operated detectors similar to the one shown in V. T. Grover Patent 2,158,069, issued on May 16, 1939; also pressure responsive devices such as those disclosed in L. L. Jones Patent 1,784,354, issued on December 9, 1930.

It is obvious that the principles of this invention may be adapted for use with runways other than the vertical, gravity type disclosed in the present drawings. As one suggested modification, the turret T may be mounted on a vertical shaft in order to adapt it for use with horizontal inlet and outlet runways along which the cans may be propelled either by belts, cables, or chains. It is also obvious that the principles of this invention are not limited to a can divider having only a pair of outlet chutes, but may be applied to one wherein three, four, or even more outlet chutes are utilized.

It is thought that the invention and many of its attendant advantages will be understood from the foregoing description, and it will be apparent that various changes may be made in the form, construction and arrangement of the parts without departing from the spirit and scope of the invention or sacrificing all of its material advantages, the form hereinbefore described being merely a preferred embodiment thereof.

I claim:

1. A can dividing mechanism comprising in combination, a can inlet runway, a plurality of can outlet runways, a rotary turret for receiving cans from said inlet runway and delivering a portion of said cans to each of said outlet runways, detector means associated with each of said runways for detecting an abnormal condition therein, and means associated with said turret and operable in response to said detector means for conditioning said turret when an abnormal condition is detected in one of said outlet runways to divert said abnormally conditioned runway's portion of said cans into another of said runways.

2. The mechanism of claim 1 wherein means are provided for preventing the feeding of cans from said inlet runway when an abnormal condition exists in all of said outlet runways.

3. A can dividing mechanism comprising in combination, a rotary turret, a can inlet runway for feeding cans to said turret, a plurality of can receiving pockets formed in said turret, means in each of said pockets for holding the cans in said pockets, said pockets being divided into two sets with said holding means in said first set normally inoperative and said holding means in said second set normally operative, a first outlet runway for receiving cans from those pockets in which said holding means are inoperative, a second outlet runway for receiving cans from those pockets in which said holding means are operative, means for rendering said can holding means in said first set of pockets operative in response to an abnormal condition in said first runway to thereby cause all of said cans to be delivered to said second runway, and means for rendering said can holding means in said second set of pockets inoperative in response to an abnormal condition in said second outlet runway to thereby cause all of said cans to be delivered to said first outlet runway.

4. The mechanism of claim 3 wherein means are provided to stop the delivery of cans when an abnormal condition exists in both of said outlet runways.

5. A can dividing mechanism comprising in combination, a rotary turret, a can inlet runway for feeding cans to said turret, a plurality of magnetic pockets in said turret, said pockets being divided into two sets with the pockets of one set normally deenergized and the pockets of the other set normally energized, a first outlet runway for receiving cans from said deenergized pockets, a second outlet runway for receiving cans from said energized pockets, means for energizing said normally deenergized pockets when an abnormal condition exists in said first outlet runway so that all of said cans are delivered to said second outlet runway, and means for deenergizing said normally energized pockets when an abnormal condition exists in said second outlet runway so that all of said cans are delivered to said first outlet runway.

6. The mechanism of claim 5 wherein means are provided for stopping the delivery of cans when an abnormal condition exists in both of said outlet runways.

7. The mechanism of claim 6 wherein said last named means operates to stop the rotation of said turret.

8. The mechanism of claim 5 in which said turret contains an even number of pockets.

9. The mechanism of claim 8 in which said sets contain the same number of pockets.

10. The mechanism of claim 9 in which the pockets of one of said sets alternate with the pockets of the other of said sets.

References Cited in the file of this patent

UNITED STATES PATENTS

2,649,184 Dodge ---------- Aug. 18, 1953